WIRING DIAGRAM

PREVOST

LE MIRAGE BUS XL2 45'

REFERENCE: STANDARD - MODEL 2003	NO: D060993
EFF. W/ OC* 2000090 PRIOR TO / OC*	DR. ERIC LANDRY — DATE: 02-01-20
EFF. W/ VEH.* 4-7965,4-8028,4-8112,4-8129,4-8165 PRIOR TO / VEH.*	CK. SYLVAIN DESBIENS — APPR. ROLAND LAPOINTE

REV.	DATE	DESCRIPTION	PAGE	BY	CK.	APPR.
00	02-01-20	COOLING 2002, OC*2000090		E.L.	S.D.	
01	03-02-18	ZF TRANSMISSION & GENERAL UPDATE	C1,E,G,H,I,L,1.1,2.1, 5.1,6.3,8.1,8.1SP1, 9.3,9.3SP1.	A.S.	E.L.	
02	03-04-17	UPPER DEFROST CABLE MODIFICATIONS - OC*2002060 REV.B EFF: 4-8213 PAGES UPDATED	1.1,15.4 G,9.3SP1	E.L.	S.D.	
03	03-06-06	ZF TRANSMISSION MODIFICATIONS & GENERAL UPDATE	A,C1,F,1.1,4.1, 4.1SP1,4.1SP2, 4.1SP3,4.2,5.1,29.1	A.S.	E.L.	
04	03-08-15	NEW VIDEO PANEL ARRANGEMENT - OC*2003038 EFF: 4-8271	C2,D,G3, 28.1, 28.3 28.4, 28.5, 28.8	M.L.	S.D.	
05	03-08-25	NEW FUSE BLOCK OC*2003033 EFF: 4-8271	F,I, 4.2,6.1,6.3,7.1 7.2,8.1,9.2,9.3,11.1, 11.2,11.3,11.4,11.5 13.1,14.1,15.2,15.3, 16.1,18.1,19.1,25.1, 28.5,4.2SP1,9.2SP1 9.3SP1,11.4SP1, 11.5SP1	E.L.	S.D.	
		ENGINE CABLE SINGLE TO DOUBLE BRAID OC*2003075 EFF: 4-8279	NO PAGES MODIFIED	A.S.	S.D.	
		WCL REMOVABLE OC*2002105 EFF: 4-8279	C1,G,29.1	S.D.	E.L.	
06	03-09-09	VIDEO STABILIZER REMOVED AND NEW DISTRIBUTION AMPLIFIER (DUAL INPUT) WITH DVD OC*2003099 AND NEW DVD OC*2003098 EFF: 4-8279	L, 28.3, 28.7, 28.8	M.L.	S.D.	
07	03-10-28	CORRECTION NEW DISTRIBUTION AMPLIFIER OC*2003099 EFF, 4-8279	28.3, 28.8	M.L.	S.D.	

REV.	DATE	DESCRIPTION	PAGE	BY	CK.	APPR.
08	03-12-11	NEW COOLING 2004 DDEC V OC*2003055 PRELIM.: 4-8279 EFF: 5-8359	B1,B2,C1,E,G,H,I,1.2, 1.2SP1,3.1,5.1,5.2, 6.1,6.3,7.2,9.3,9.3SP1 18.1,21.1,29.1	S.D.	S.D.	
		FACE LIFT: NEW FOG & HEADLAMPS OC*2002132 EFF: 4-8359 XENON HEADLAMPS OPTION OC*2003030 EFF: 4-8359	F,J,2.1,3.1,9.5	E.L.		
		NEW HVAC MODULE PROGRAMMATION OC*2003120 EFF: 5-8359	N/A			
		MARKER & DIRECTIONAL LTS CONNECTORS OC*2003079 EFF: 5-8359 A/C COMPRESSOR CONNECTOR OC*2003089 EFF: 5-8359	9.1,9.2,9.2SP1 15.2	A.S.		
09	04-03-11	CLEARANCE LTS W/JIFFY SPLICE OC*2003118 EFF: 5-8408 PAGES UPDATED →	C1 B1.1, 6.1,6.3,14.4, 14.4SP3,15.4,22.1	A.S. E.L.		
10	04-05-04	BOSCH ALT. C-399 ELIMINATED OC*2004020 EFF: 5-8426 PAGES UPDATED →	C1,G,4.2 C2,24.1	E.L.		
11	04-05-24	CUT-OFF SWITCHS FOR MONITORS AND SPEAKERS EFF:5-8457	E, J, G, 28.2SP1, 28.3SP1, 28.8SP1	S.L.		
12	04-06-18	PROGRAMMABLE DIGITAL CLOCK OC*2004045	13.1	S.L.		
13	04-07-08	UP DATE: DIGITAL CLOCK →	13.1	S.L.		
		CUT-OFF SWITCHS FOR SPEAKERS →	28.2SP1,28.3SP1, 28.6SP1,28.8SP1	S.L.		
		SATELLITE ANTENNA, EFF:5-8457				
		ETHERNET NETWORK	28.9SP1	S.L.		
14	04-09-22	LAVATORY FAN'S SPEED (REDUCE BY HALF) SPECIAL OPTION	E2, 2.1SP1, 26.1SP3	S.L.	S.D.	

REV.	DATE	DESCRIPTION	PAGE	BY	CK.	APPR.
15	15-01-06	24 VDC MINI-RELAYS CHANGE TO VOLVO OC*2004108 EFF: 5-8578	I, 2.1, 2.1SP1, 4.1, 4.1SP1, 4.1SP2, 4.1SP3, 5.1, 5.2, 6.1, 6.3, 7.2, 8.1, 9.1, 9.2, 9.2SP1, 9.3, 9.3SP1, 9.5, 11.2, 11.3, 11.4, 11.4SP1, 11.5, 11.5SP1, 11.5SP2, 12.1, 14.4, 14.4SP1, 14.4SP2, 15.1, 15.1SP1, 15.2, 15.2SP1, 15.3SP1, 18.1, 18.1SP1, 21.1, 22.1, 24.1, 26.1, 26.1SP3,27SP1, 27.1, 28.1,28.3,28.3SP1, 29.1, 29.1SP1.	J.PRO		
16	05-05-01	NEW CONTROL FOR R89 WATER PUMP RELAY AND PASSENGER LIQ. SOL. VALVE OC *2004103 EFF: 5-8645	C1,15.2,15.3	J.PRO		
17	05-05-01	NEW REGULATION FOR WCL 2005 OC *2004089 EFF: 5-8606	C1,E,G,I,5.1,6.1,6.3, 7.2,29.1	SD	S.D.	
18	05-05-17	OPTION XM RADIO SYSTEM OC*2005024 EFF: 5-8678	C2,G,28.1SP1, 28.1SP2, 28.1SP3	J.PRO.		
		ADD RELAY ON LAVATORY FAN OC*2005029 EFF: 6-8759	C1, I, 1.1, 11.3, 26.1, 26.1SP3	J.PRO.		
		UP-DATE	A,E,F,8.1SP2	SL		

WIRING DIAGRAM INDEX

A	A/C & VENTILATION PARCEL RACK	Page:	15.1
	A/C & HEAT – VENTILATION	Page:	15.2
	A/C & HEAT – UPPER DEFROST	Page:	15.4
	ALARM & SIGNAL	Page:	7.2
	ABS	Page:	22.1
	ARRANGEMENT - CABLE	Page:	B
	ARRANGEMENT - HARNESS	Page:	C
	ARRANGEMENT - SPARE WIRE	Page:	D
B			
	BACK-UP ALARM	Page:	9.3
	BACK-UP CAMERA	Page:	25.1
	BATTERY	Page:	1.2
	BATTERY CHARGER	Page:	11.5
C			
	CAMERA SCENIC VIEW	Page:	28.4
	CHARGING SYSTEM	Page:	4.2
	CIGAR LIGHTER & 12V OUTLET	Page:	13.1
	CLUSTER	Page:	7.1
	CODE - CIRCUIT NUMBER	Page:	E
	CODE - CIRCUIT BREAKER	Page:	F
	CODE - CONNECTOR	Page:	G
	CODE - DIODE	Page:	H
	CODE - FUSE	Page:	L
	CODE - RELAY	Page:	I
	CODE - RESISTOR	Page:	J
	CODE – TRUTH TABLE	Page:	M
	CODE - WIRING KEY	Page:	K
	CRUISE CONTROL - DDEC	Page:	5.1
D			
	DASH INSTRUMENT	Page:	7.1
	DDEC IV	Page:	5
	DIGITAL CLOCK	Page:	13.1
	DISCONNECT SWITCH 12V, 24V	Page:	1.1
	DISTRIBUTION 24 VOLTS	Page:	1.1
	DISTRIBUTION 12 VOLTS	Page:	2.1
	DRIVER'S SEAT (WIRING ONLY)	Page:	13.1
E			
	ENGINE BLOCK HEATER	Page:	20.1
	ENGINE BRAKE SYSTEM	Page:	21.1
	ENGINE CONTROL	Page:	4.1
	ENTRANCE DOOR (SEDAN)	Page:	24.1
	ETHER COLD START	Page:	8.1
	EXTERIOR LIGHTING	Page:	9
F			
	FAN-CLUTCH RADIATOR	Page:	8.1
	FAST IDLE - DDEC	Page:	5.2
	FIRE DETECTOR	Page:	7.2
	FRONT DESTINATION SIGN	Page:	25.1
	FUEL WATER FILTER	Page:	8.1
	FUEL PRIME PUMP	Page:	19.1
G			
	GROUND SYSTEM	Page:	7.2
H	GALLEY	Page:	27.1
	HORN	Page:	7.2
	HI-BUOY	Page:	18.1
I	HOTESS CHIME	Page:	11.4
	INTERIOR LIGHTING	Page:	11
K	INTERCOM	Page :	30.1
	KNEELING SYSTEM	Page:	18.1
L			
	LAVATORY	Page:	26.1
	LOW BUOY	Page:	18.1
M	LUGGAGE DOOR LOCK	Page:	12.1
P	MIRROR-REAR VIEW	Page:	16
	PARKING BRAKE SWITCH & ALARM	Page:	8.1
R	POWER 12V OUTLET	Page:	13.1
S	RETARDER - WORLD TRANSM.	Page:	21.1
	SEAT AUDIO	Page:	28.6
	SOUND SYSTEM	Page:	28.1
	SPEED SIGNAL	Page:	17.1
	SPEEDOMETER	Page:	7.1
	STARTER	Page:	4.2
	STEERING CONTROL	Page:	17.1
	STEP LIGHTS	Page:	24.1
	SUN VISOR	Page:	19.1
T			
	TACHOMETER	Page:	7.1
	TRANSMISSION – WTEC 3	Page:	6.1
	TRANSMISSION – ZF	Page:	6.3
	TELL TALE LIGHT MODULES	Page	23.1
V	TV TUNER	Page	28.3
	VIDEO SYSTEM	Page	28.3
W			
	WATER HEATER PRE-HEAT	Page:	14.1
	WATER TANK HEATER	Page:	20.1
	WINDOW AJAR	Page:	20.1
	WINDOW LIFTER	Page:	19.1
	WIPER & WASHER	Page:	10.1
	WIRELESS MICROPHONE	Page:	28.5
	WHEELCHAIR LIFT	Page:	29.1

WIRING DIAGRAM INDEX

A

A/C & VENT.- PARCEL RACK	Page:	15.1
A/C, HEAT & VENTILATION	Page:	15.2
A/C, HEAT & UPPER DEFROST	Page:	15.4
ALARM & SIGNAL	Page:	7.2
ABS	Page:	22.1
ARRANGEMENT - CABLE	Page:	B
ARRANGEMENT - HARNESS	Page:	C
ARRANGEMENT - SPARE WIRE	Page:	D

B

BACK-UP ALARM	Page:	9.3
BACK-UP CAMERA	Page:	25.1
BATTERY	Page:	1.2
BATTERY CHARGER	Page:	11.5

C

CAMERA SCENIC VIEW	Page:	28.4
CHARGING SYSTEM	Page:	4.2
CIGAR LIGHTER & 12V OUTLET	Page:	13.1
CLUSTER	Page:	7.1
CODE - CIRCUIT NUMBER	Page:	E
CODE - CIRCUIT BREAKER	Page:	F
CODE - CONNECTOR	Page:	G
CODE - DIODE	Page:	H
CODE - FUSE	Page:	L
CODE - RELAY	Page:	I
CODE - RESISTOR	Page:	J
CODE – TRUTH TABLE	Page:	M
CODE - WIRING KEY	Page:	K
CRUISE CONTROL - DDEC	Page:	5.1

D

DASH INSTRUMENT	Page:	7.1
DDEC IV	Page:	5
DIGITAL CLOCK	Page:	13.1
DISCONNECT SWITCH 12V, 24V	Page:	1.1
DISTRIBUTION 24 VOLTS	Page:	1.1
DISTRIBUTION 12 VOLTS	Page:	2.1
DRIVER'S SEAT (WIRING ONLY)	Page:	13.1

E

ENGINE BLOCK HEATER	Page:	20.1
ENGINE BRAKE SYSTEM	Page:	21.1
ENGINE CONTROL	Page:	4.1
ENTRANCE DOOR (SEDAN)	Page:	24.1
ETHER COLD START	Page:	8.1
EXTERIOR LIGHTING	Page:	9

F

FAN-CLUTCH RADIATOR	Page:	8.1
FAST IDLE - DDEC	Page:	5.2
FIRE DETECTOR	Page:	7.2
FRONT DESTINATION SIGN	Page:	25.1
FUEL WATER FILTER	Page:	8.1
FUEL PRIME PUMP	Page:	19.1

G

GROUND SYSTEM	Page:	7.2
GALLEY	Page:	27.1

H

HORN	Page:	7.2
HI-BUOY	Page:	18.1
HOSTESS CHIME	Page:	11.4

I

INTERIOR LIGHTING	Page:	11
INTERCOM	Page :	30.1

K

KNEELING SYSTEM	Page:	18.1

L

LAVATORY	Page:	26.1
LOW BUOY	Page:	18.1
LUGGAGE DOOR LOCK	Page:	12.1

M

MIRROR-REAR VIEW	Page:	16

P

PARKING BRAKE SWITCH & ALARM	Page:	8.1
POWER 12V OUTLET	Page:	13.1

R

RETARDER - WORLD TRANSM.	Page:	21.1

S

SEAT AUDIO	Page:	28.6
SOUND SYSTEM	Page:	28.1
SPEED SIGNAL	Page:	17.1
SPEEDOMETER	Page:	7.1
STARTER	Page:	4.2
STEERING CONTROL	Page:	17.1
STEP LIGHTS	Page:	24.1
SUN VISOR	Page:	19.1

T

TACHOMETER	Page:	7.1
TRANSMISSION – WTEC 3	Page:	6.1
TRANSMISSION – ZF	Page:	6.3
TELL TALE LIGHT MODULES	Page :	23.1
TV TUNER	Page :	28.3

V

VIDEO SYSTEM	Page :	28.3

W

WATER HEATER PRE-HEAT	Page:	14.1
WATER TANK HEATER	Page:	20.1
WINDOW AJAR	Page:	20.1
WINDOW LIFTER	Page:	19.1
WIPER & WASHER	Page:	10.1
WIRELESS MICROPHONE	Page:	28.5
WHEELCHAIR LIFT	Page:	29.1

WIRING DIAGRAM INDEX

WIRING DIAGRAM INDEX

A

A/C & VENT.- PARCEL RACK Page: 15.1
A/C, HEAT & VENTILATION Page: 15.2
A/C, HEAT & UPPER DEFROST Page: 15.4
AIR DRYER Page: 8.1SP2
ALARM & SIGNAL Page: 7.2
ABS Page: 22.1
ARRANGEMENT - CABLE Page: B
ARRANGEMENT - HARNESS Page: C
ARRANGEMENT - SPARE WIRE Page: D

B

BACK-UP ALARM Page: 9.3
BACK-UP CAMERA Page: 25.1
BATTERY Page: 1.2
BATTERY CHARGER Page: 11.5

C

CAMERA SCENIC VIEW Page: 28.4
CHARGING SYSTEM Page: 4.2
CIGAR LIGHTER & 12V OUTLET Page: 13.1
CLUSTER Page: 7.1
CODE - CIRCUIT NUMBER Page: E
CODE - CIRCUIT BREAKER Page: F
CODE - CONNECTOR Page: G
CODE - DIODE Page: H
CODE - FUSE Page: L
CODE - RELAY Page: I
CODE - RESISTOR Page: J
CODE – TRUTH TABLE Page: M
CODE - WIRING KEY Page: K
CRUISE CONTROL - DDEC Page: 5.1

D

DASH INSTRUMENT Page: 7.1
DDEC IV Page: 5
DIGITAL CLOCK Page: 13.1
DISCONNECT SWITCH 12V, 24V Page: 1.1
DISTRIBUTION 24 VOLTS Page: 1.1
DISTRIBUTION 12 VOLTS Page: 2.1
DRIVER'S SEAT (WIRING ONLY) Page: 13.1

E

ENGINE BLOCK HEATER Page: 20.1
ENGINE BRAKE SYSTEM Page: 21.1
ENGINE CONTROL Page: 4.1
ENTRANCE DOOR (SEDAN) Page: 24.1
ETHER COLD START Page: 8.1
EXTERIOR LIGHTING Page: 9

F

FAN-CLUTCH RADIATOR Page: 8.1
FAST IDLE - DDEC Page: 5.2
FIRE DETECTOR Page: 7.2
FRONT DESTINATION SIGN Page: 25.1
FUEL WATER FILTER Page: 8.1
FUEL PRIME PUMP Page: 19.1

G

GROUND SYSTEM Page: 7.2
GALLEY Page: 27.1

H

HORN Page: 7.2
HI-BUOY Page: 18.1
HOSTESS CHIME Page: 11.4

I

INTERIOR LIGHTING Page: 11
INTERCOM Page : 30.1

K

KNEELING SYSTEM Page: 18.1

L

LAVATORY Page: 26.1
LOW BUOY Page: 18.1
LUGGAGE DOOR LOCK Page: 12.1

M

MIRROR-REAR VIEW Page: 16

P

PARKING BRAKE SWITCH & ALARM Page: 8.1
POWER 12V OUTLET Page: 13.1

R

RETARDER - WORLD TRANSM. Page: 21.1

S

SEAT AUDIO Page: 28.6
SOUND SYSTEM Page: 28.1
SPEED SIGNAL Page: 17.1
SPEEDOMETER Page: 7.1
STARTER Page: 4.2
STEERING CONTROL Page: 17.1
STEP LIGHTS Page: 24.1
SUN VISOR Page: 19.1

T

TACHOMETER Page: 7.1
TRANSMISSION – WTEC 3 Page: 6.1
TRANSMISSION – ZF Page: 6.3
TELL TALE LIGHT MODULES Page : 23.1
TV TUNER Page : 28.3

V

VIDEO SYSTEM Page : 28.3

W

WATER HEATER PRE-HEAT Page: 14.1
WATER TANK HEATER Page: 20.1
WINDOW AJAR Page: 20.1
WINDOW LIFTER Page: 19.1
WIPER & WASHER Page: 10.1
WIRELESS MICROPHONE Page: 28.5
WHEELCHAIR LIFT Page: 29.1

WIRING DIAGRAM INDEX

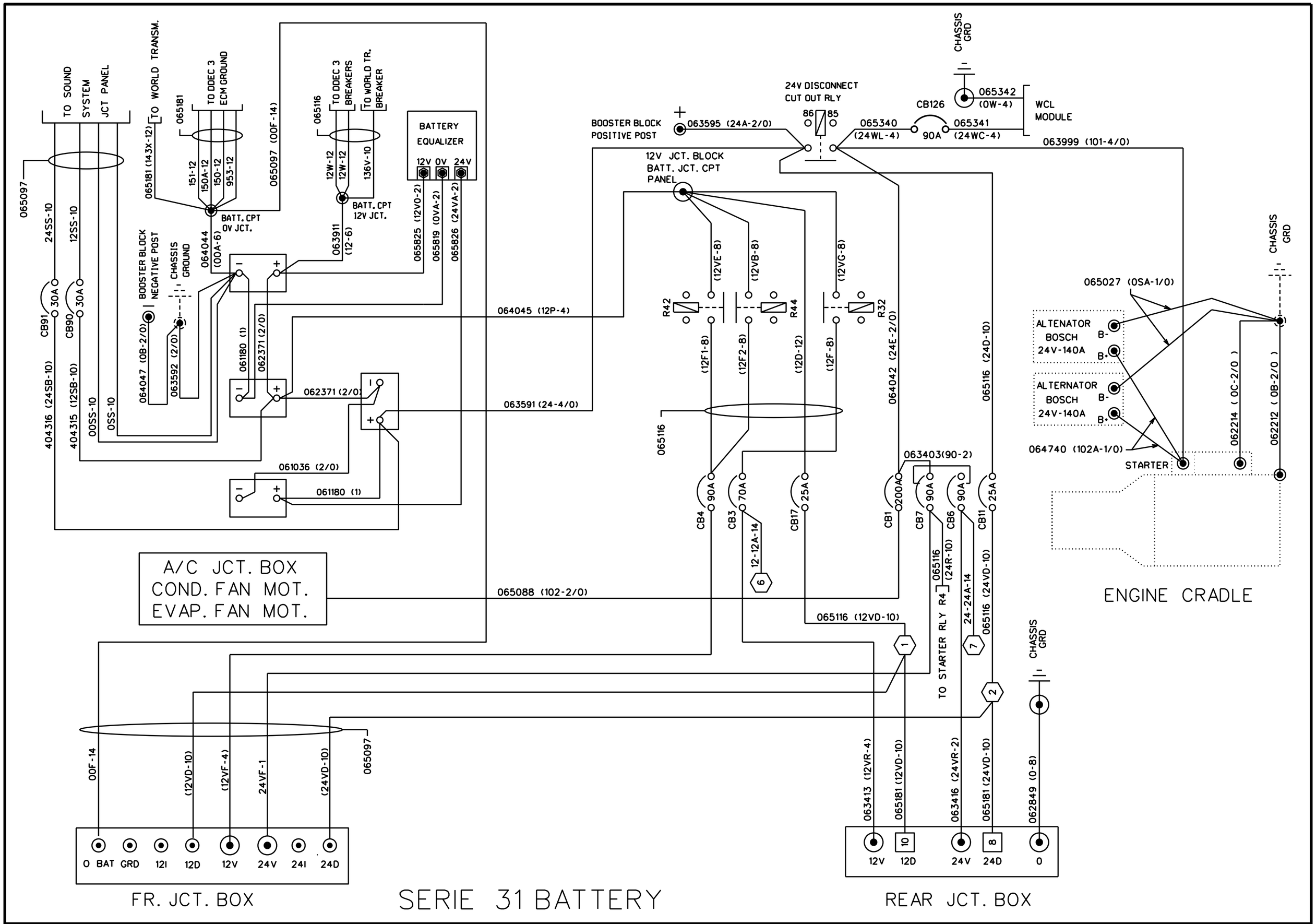

SERIE 31 BATTERY

PREVOST	WIRING DIAGRAM	NO: D060993	PAGE: B1	REVISION 00

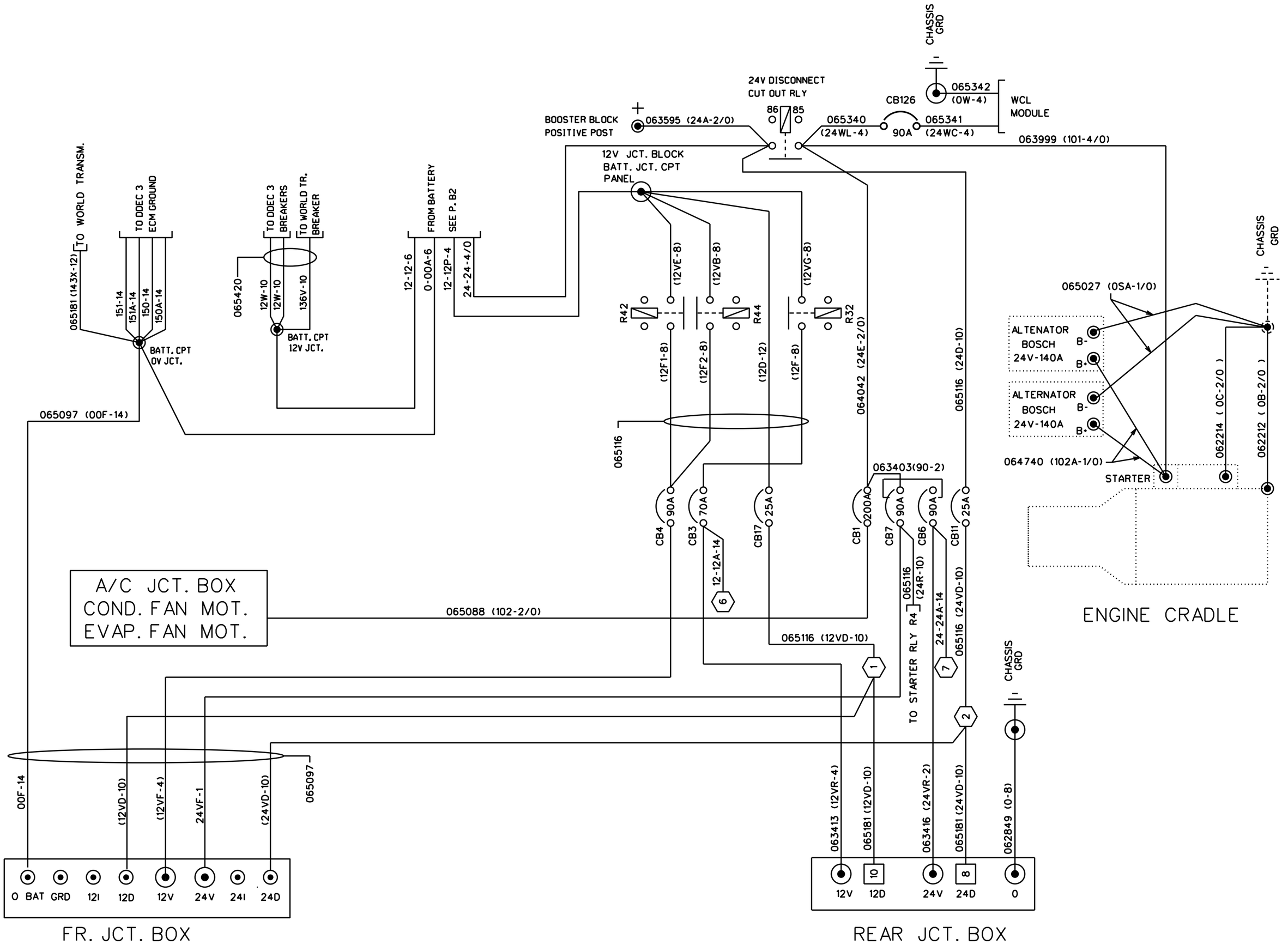

PREVOST	WIRING DIAGRAM	NO: D060993	PAGE: B1	REVISION 08

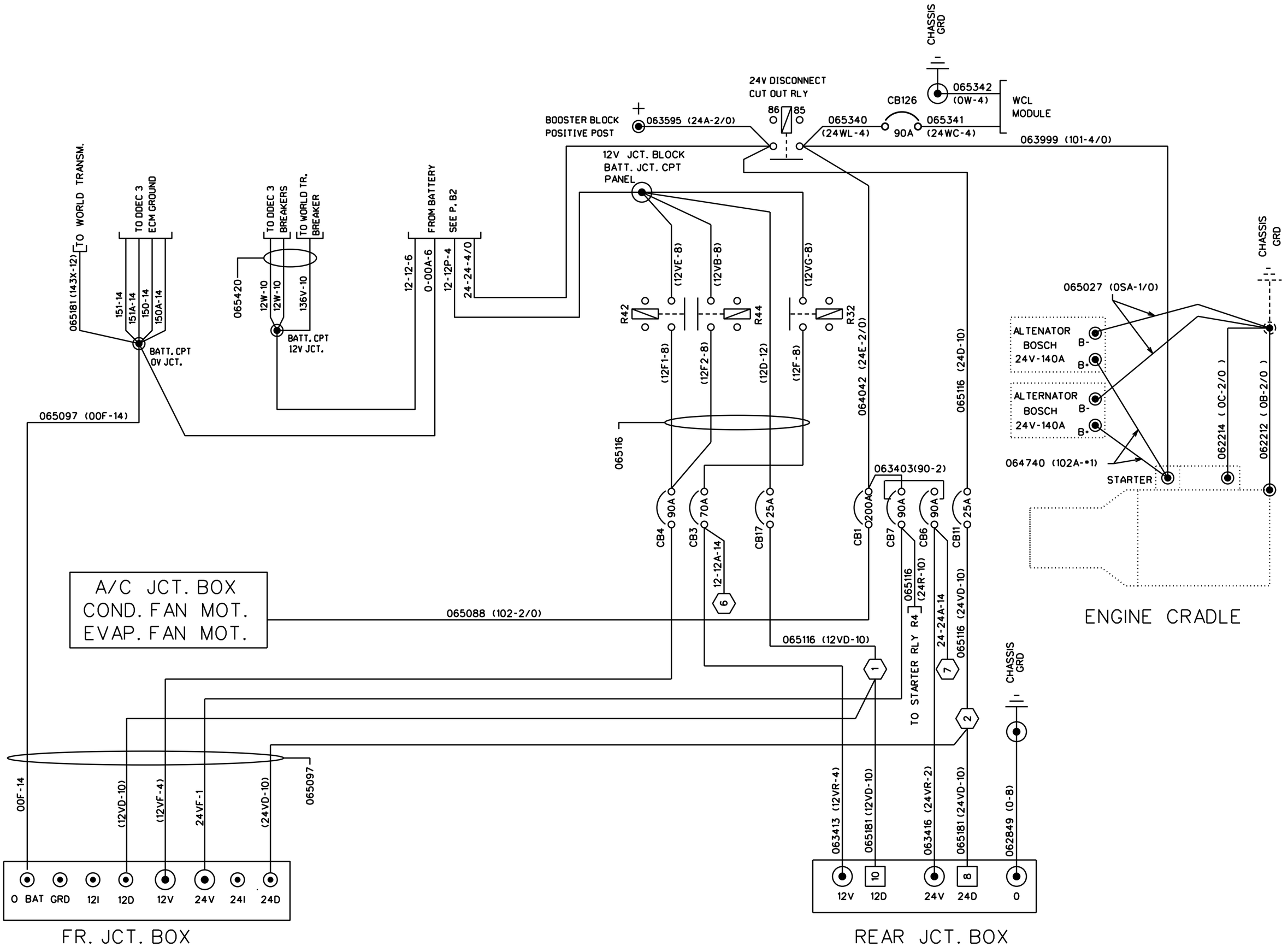

PREVOST	WIRING DIAGRAM	NO: D060993	PAGE: B1	REVISION 09

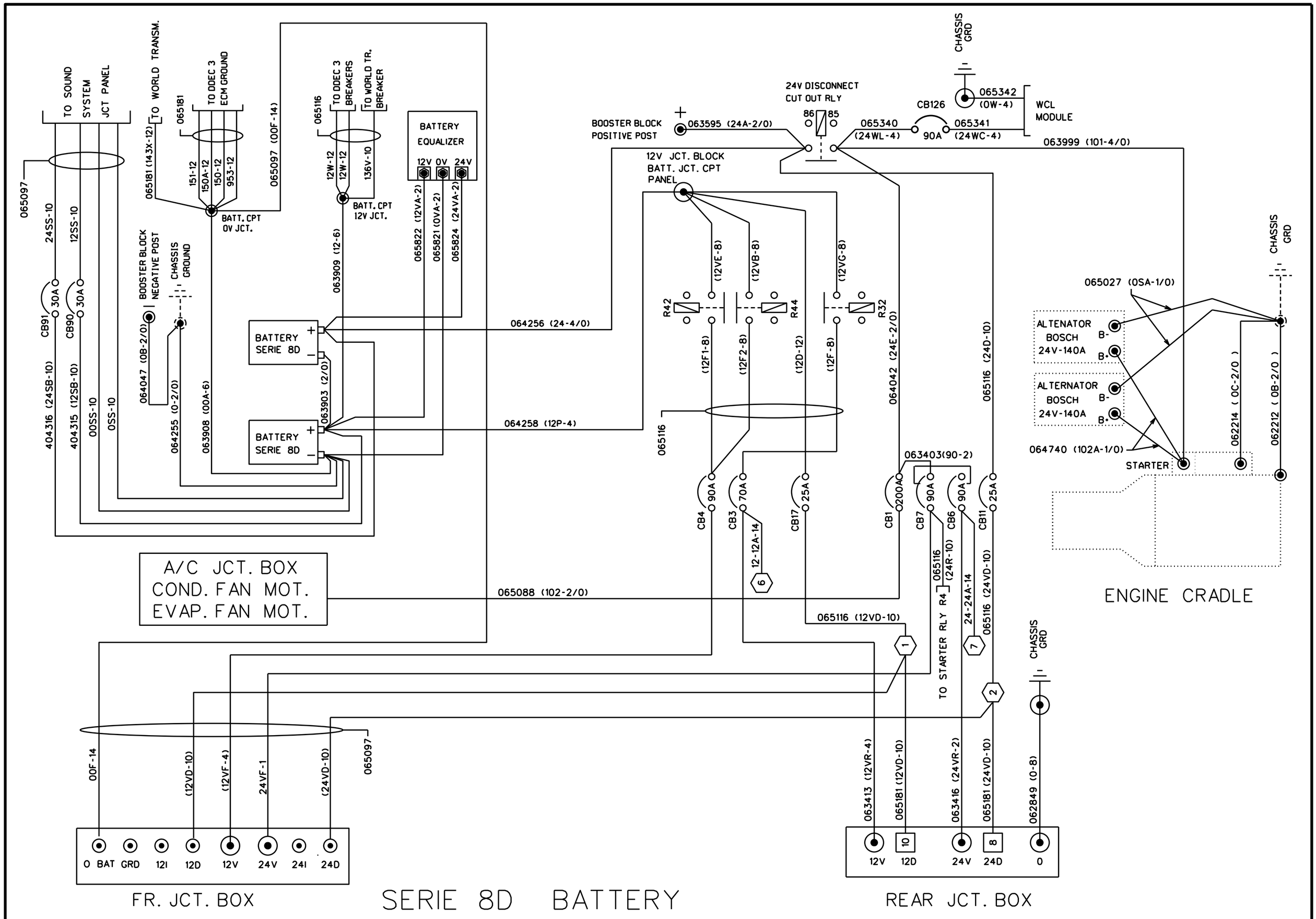

PREVOST	WIRING DIAGRAM	NO: D060993	PAGE: B2	REVISION 00

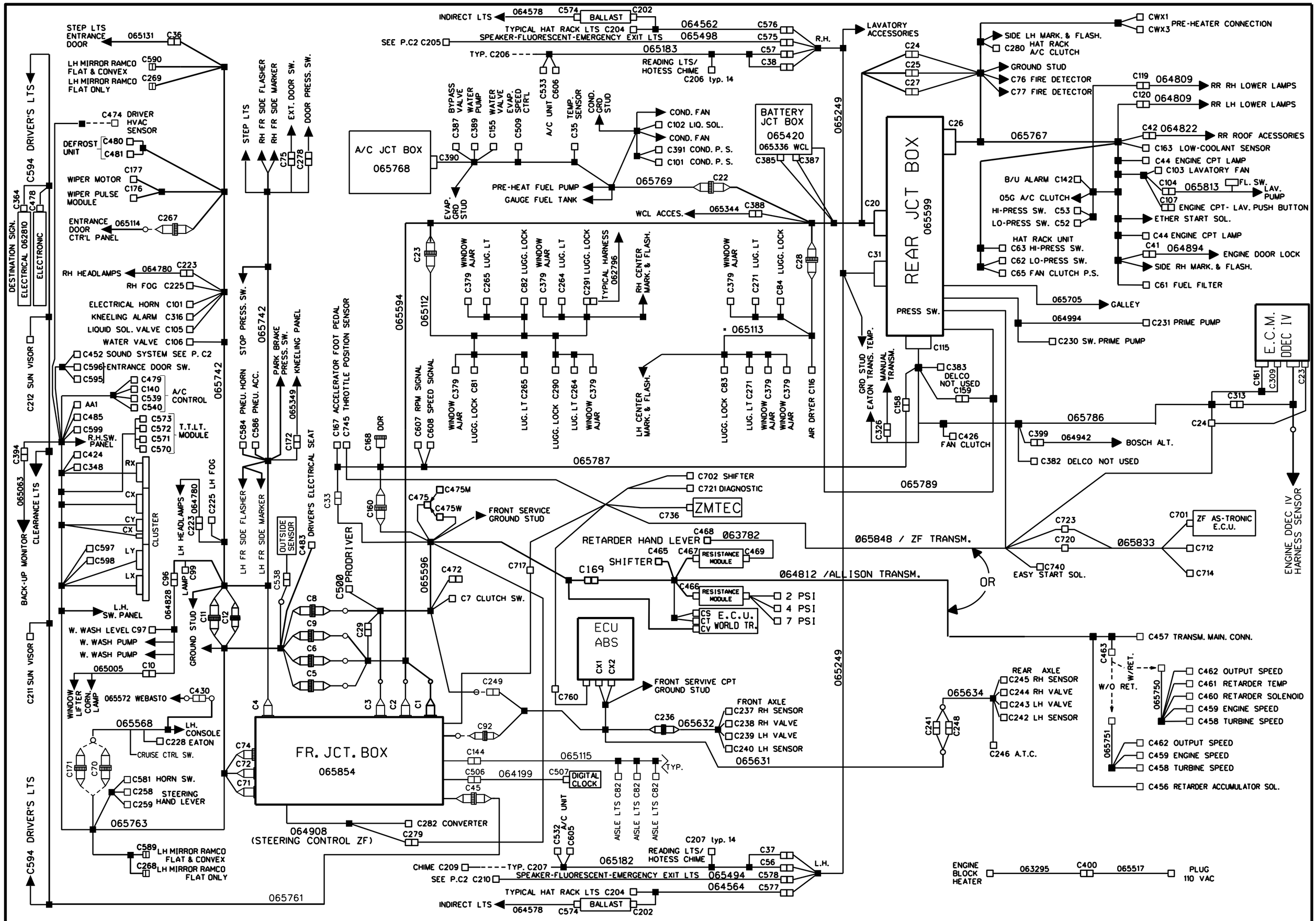

PREVOST	WIRING DIAGRAM	NO: D060993	PAGE: C1	REVISION 00

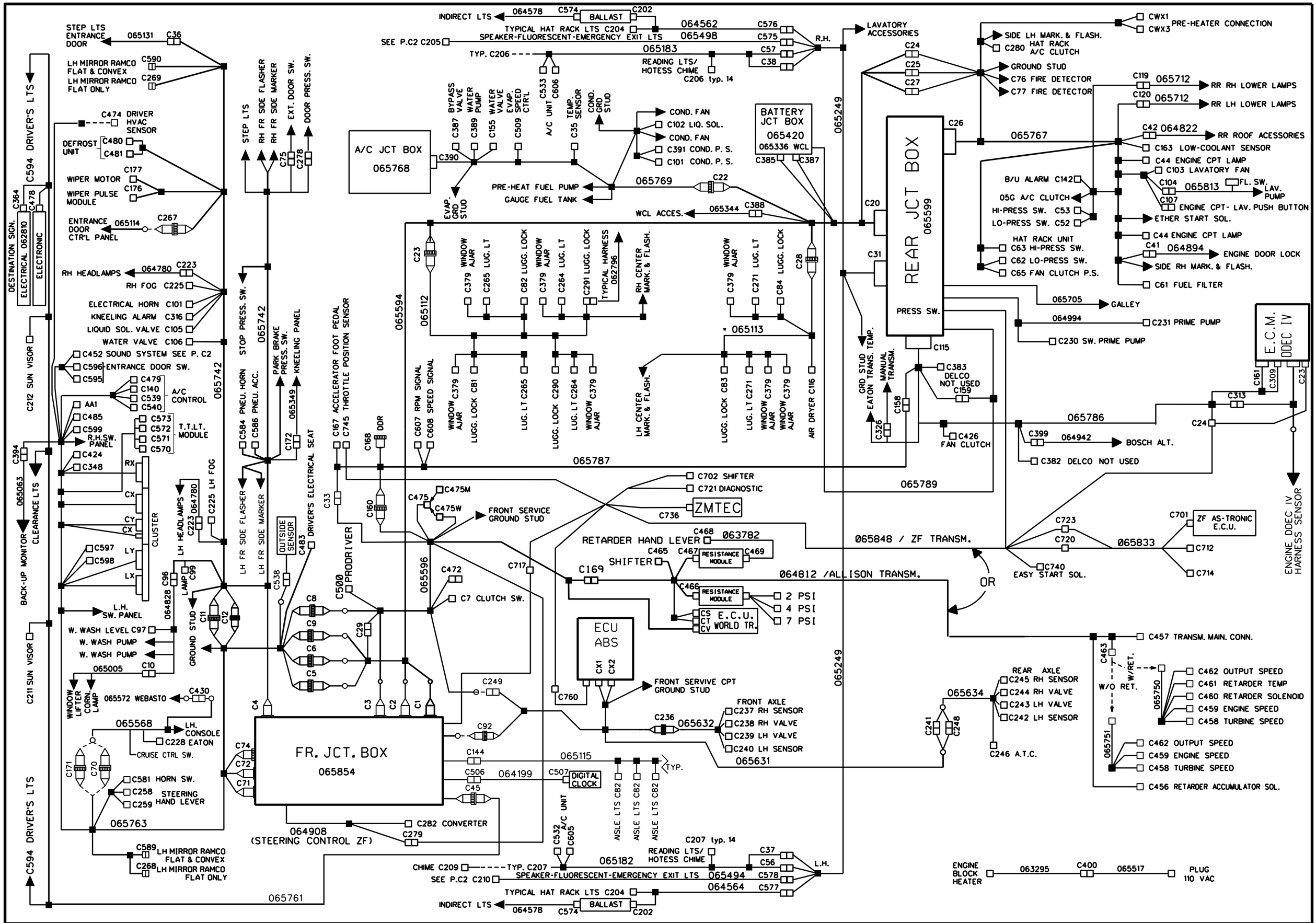

PREVOST	WIRING DIAGRAM	NO: D060993	PAGE: C1	REVISION 01

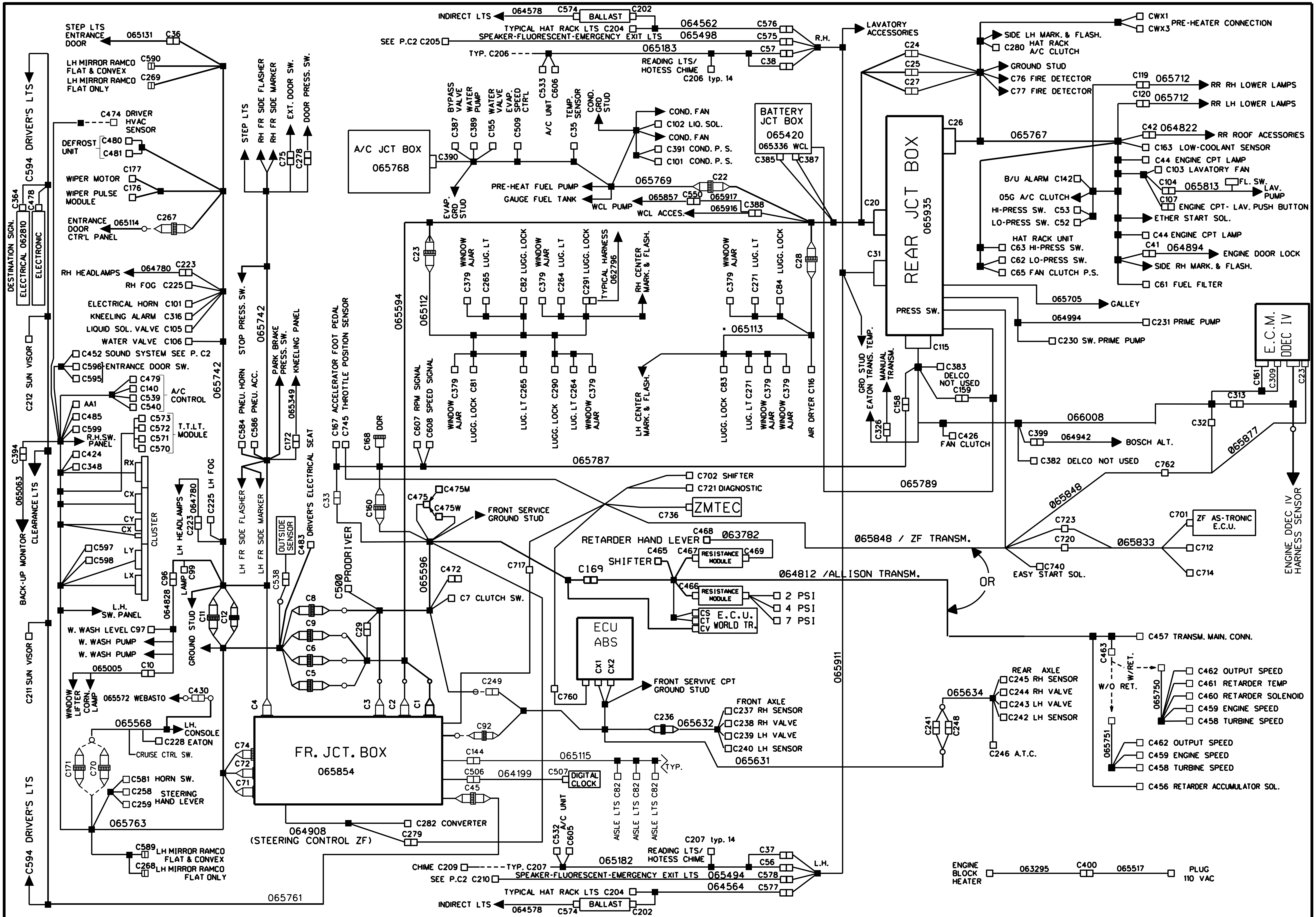

PREVOST

WIRING DIAGRAM

NO: D060993

PAGE: C1

REVISION 05

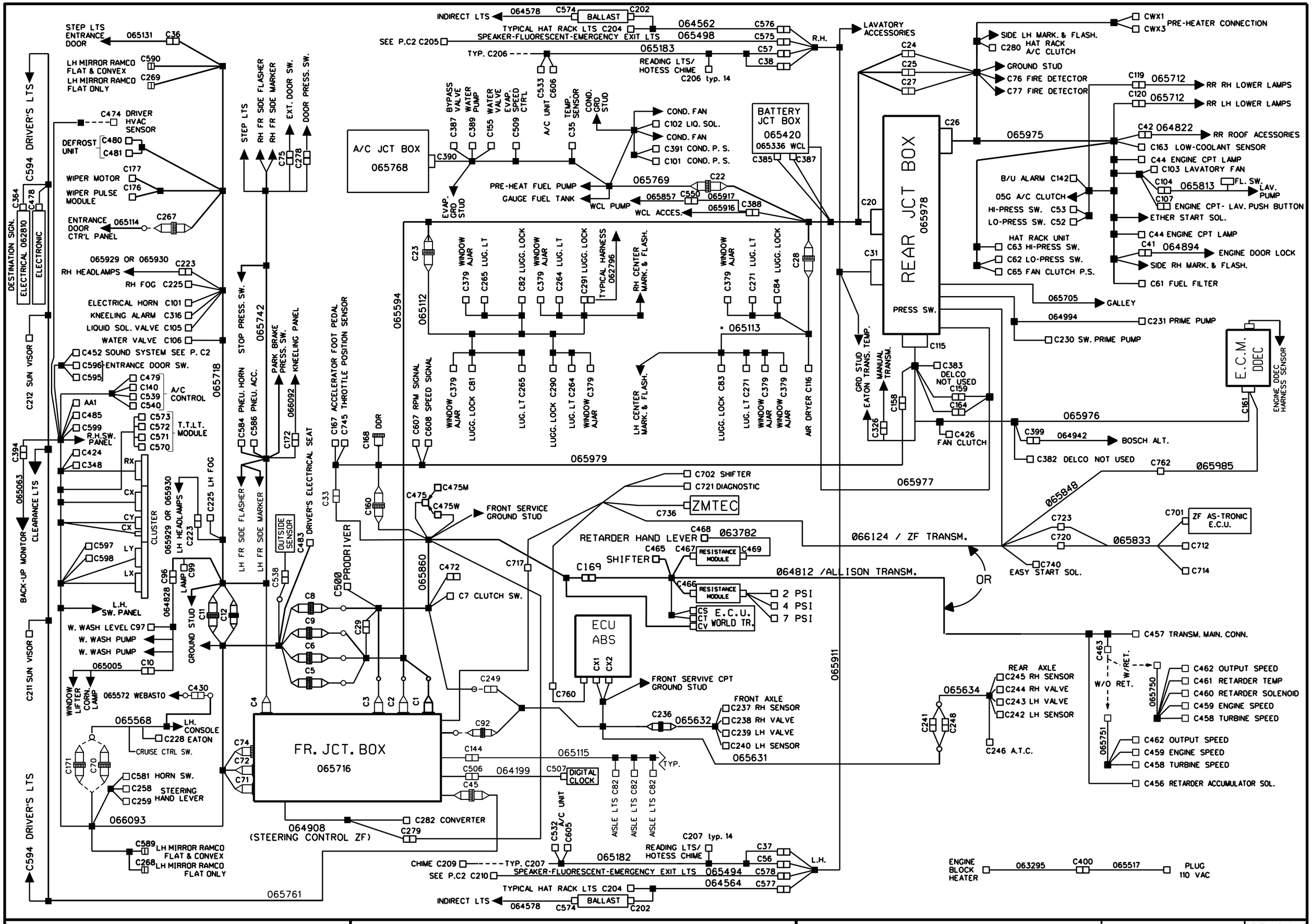

PREVOST	WIRING DIAGRAM	NO: D060993	PAGE: C1	REVISION 08

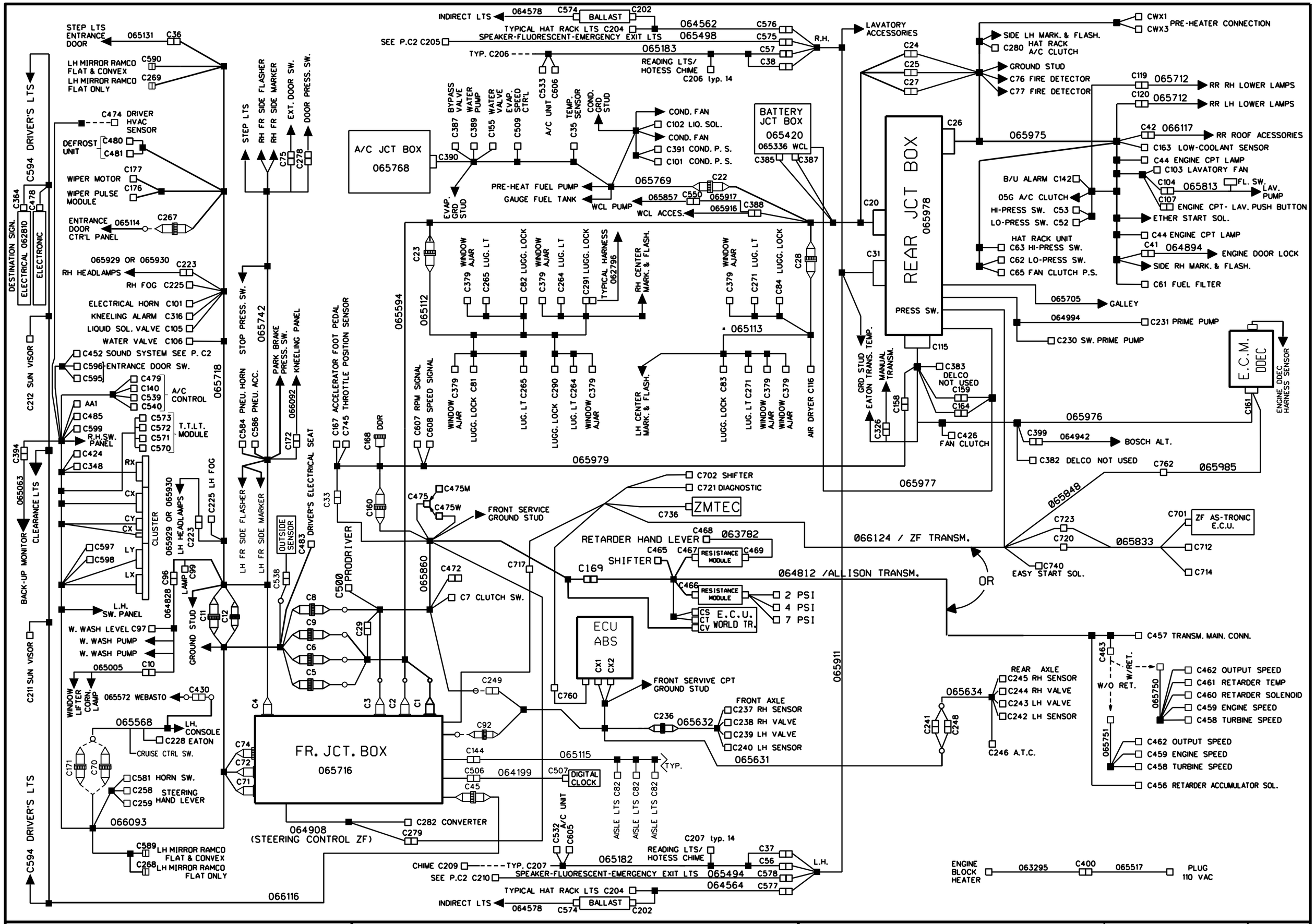

PREVOST	WIRING DIAGRAM	NO: D060993	PAGE: C1	REVISION 09

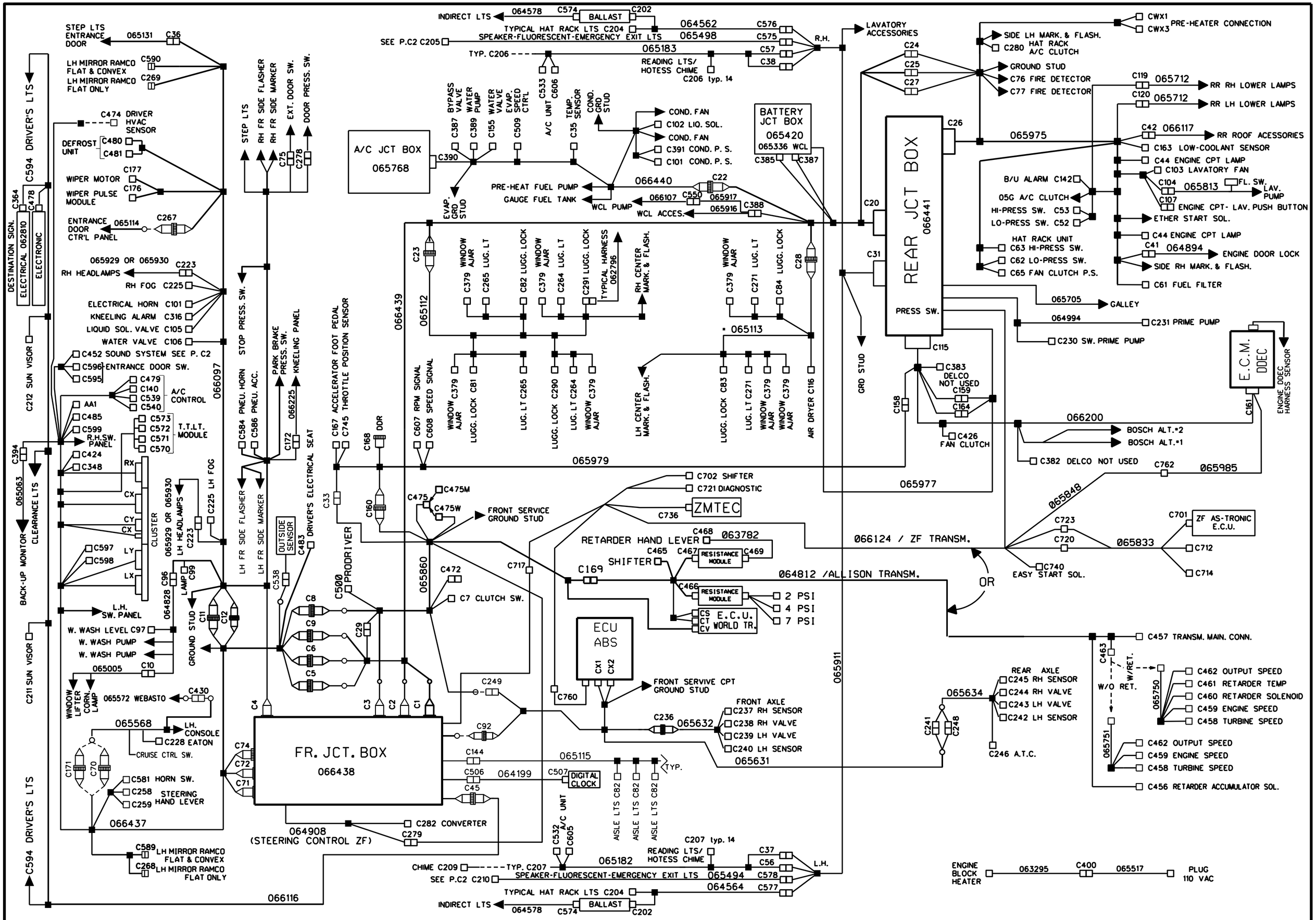

PREVOST	WIRING DIAGRAM	NO: D060993	PAGE: C1	REVISION 16

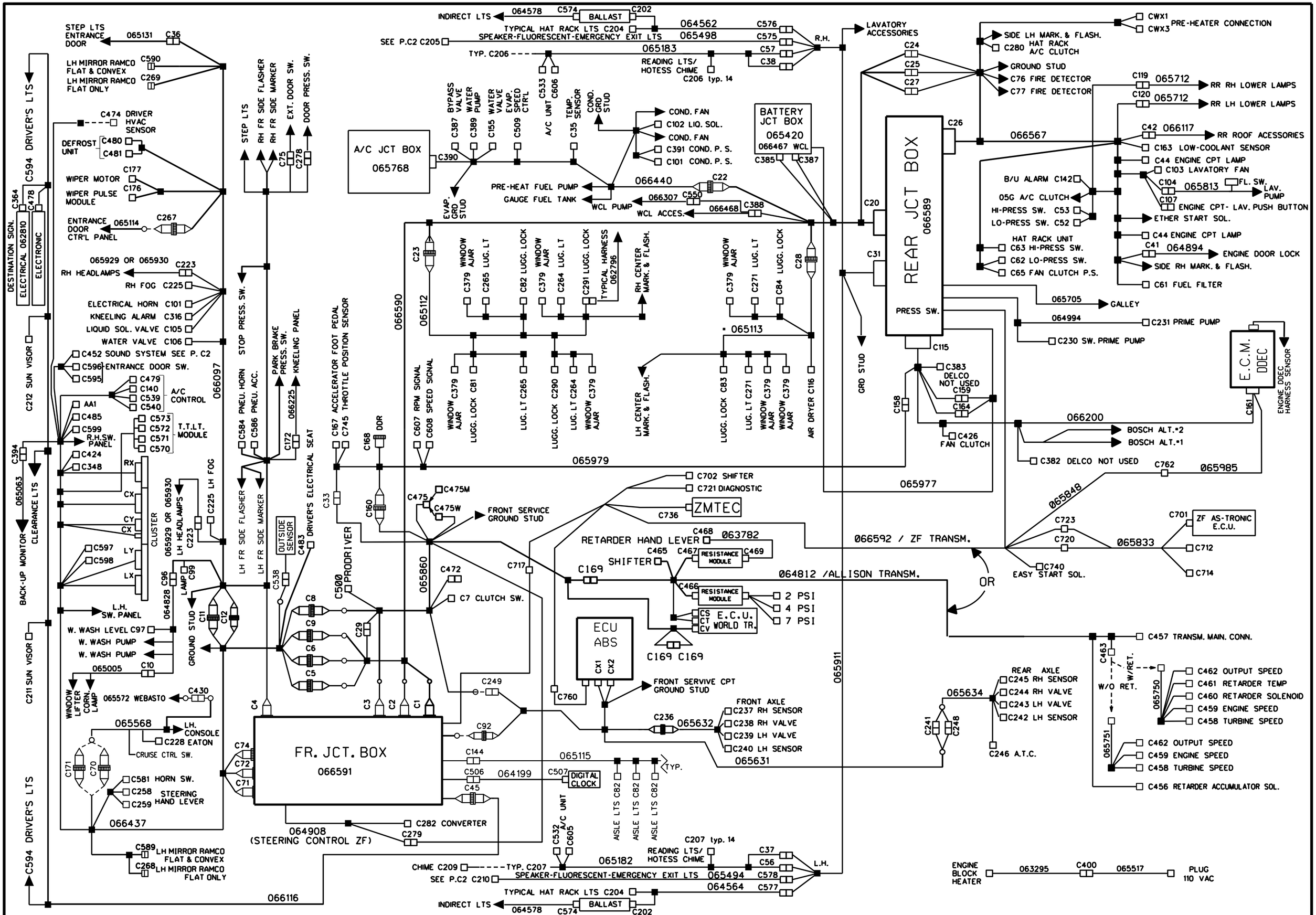

PREVOST	WIRING DIAGRAM	NO: D060993	PAGE: C1	REVISION 18

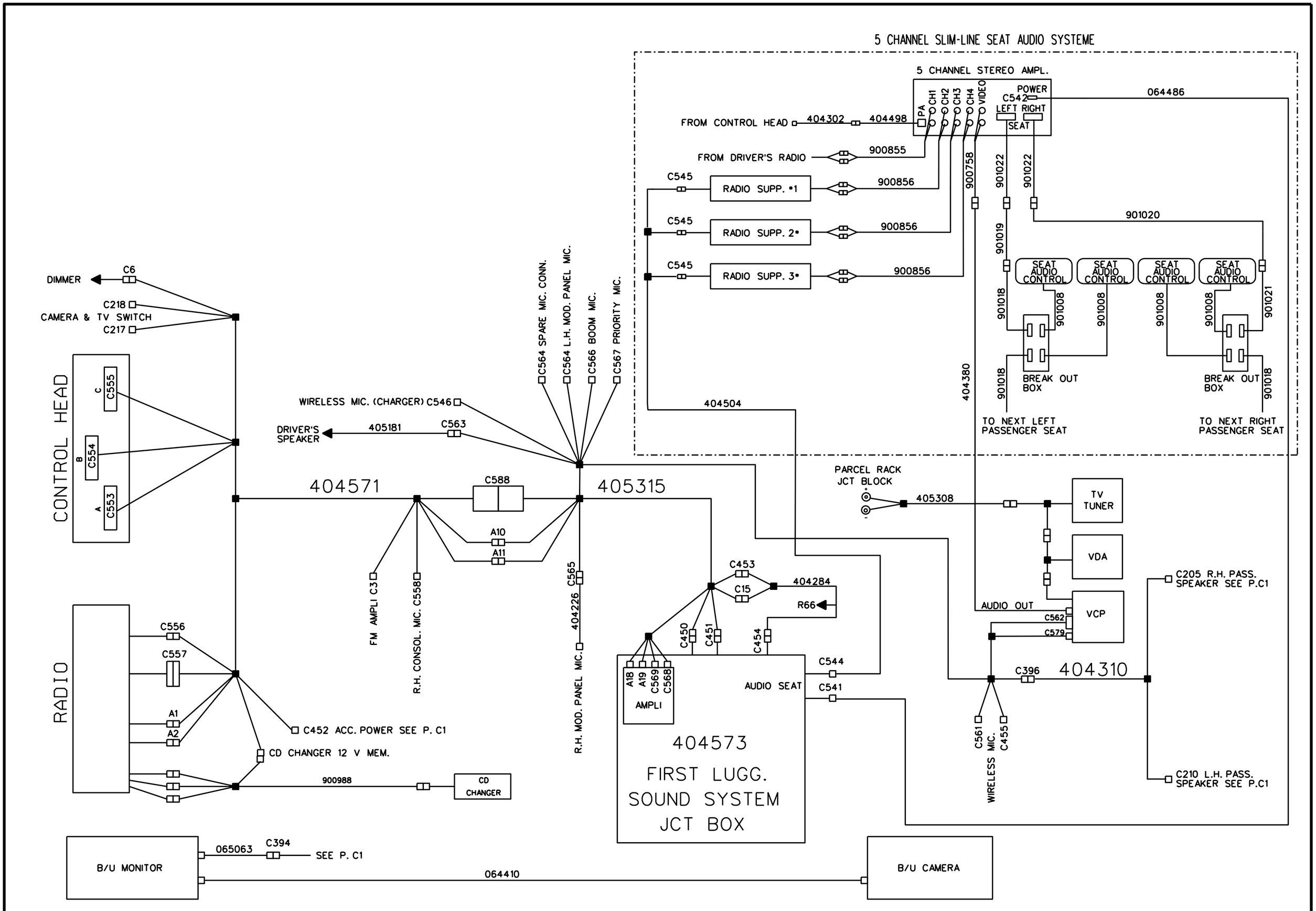

PREVOST	WIRING DIAGRAM	NO: D060993	PAGE: C2	REVISION 00

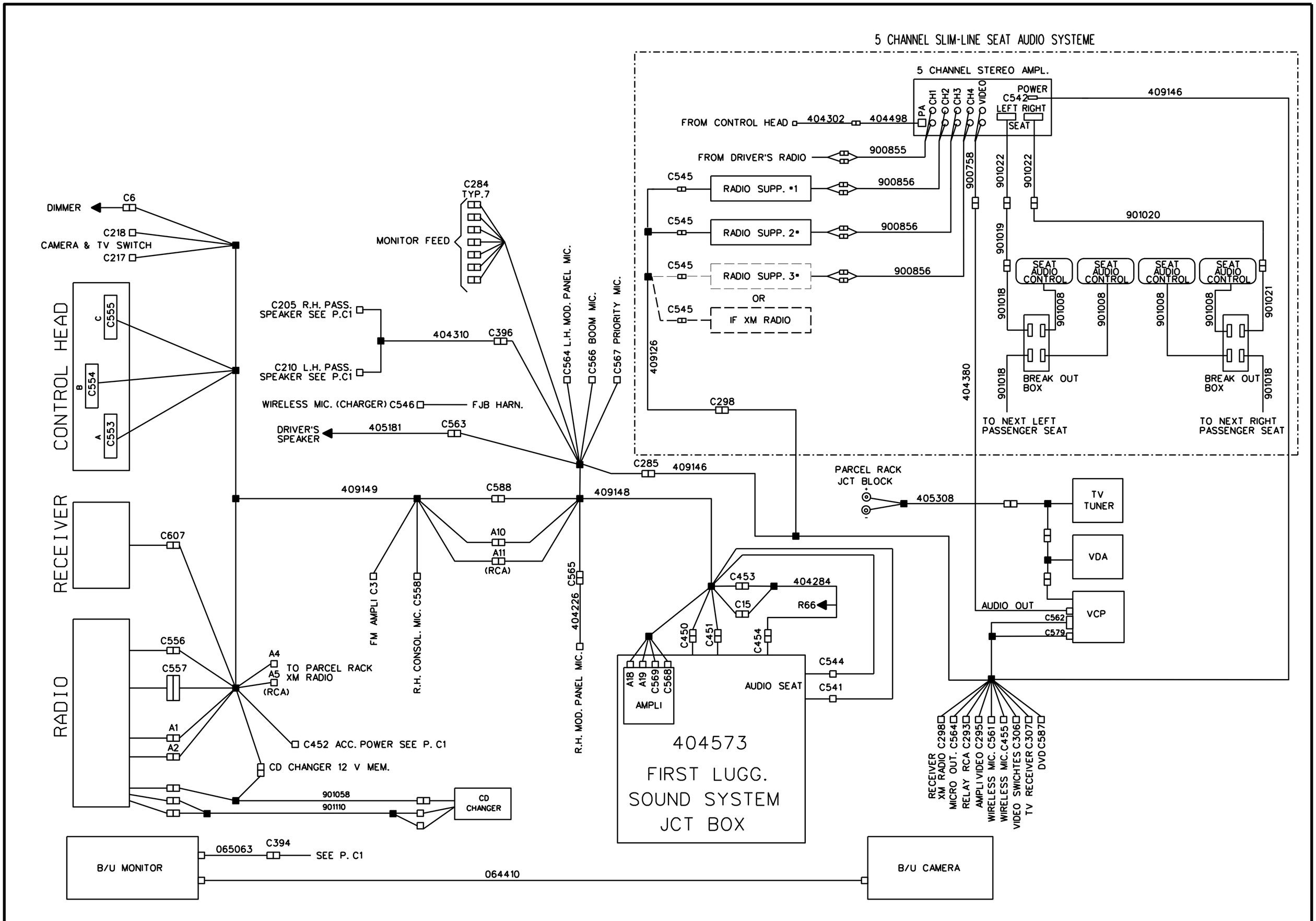

PREVOST	WIRING DIAGRAM	NO: D060993	PAGE: C2	REVISION 18

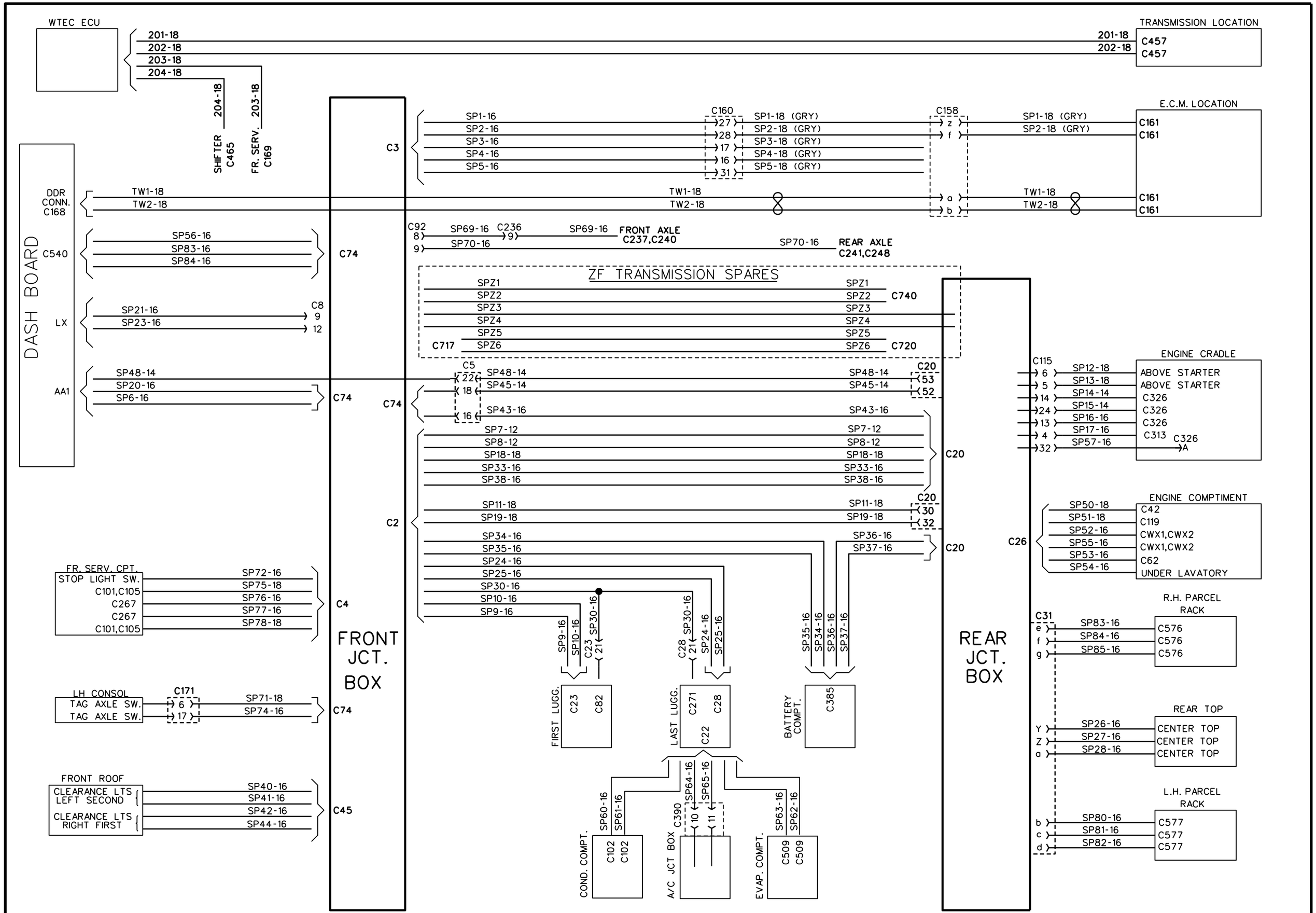

PREVOST CAR inc.	WIRING DIAGRAM	NO: D060993	P.D	REVISION 00

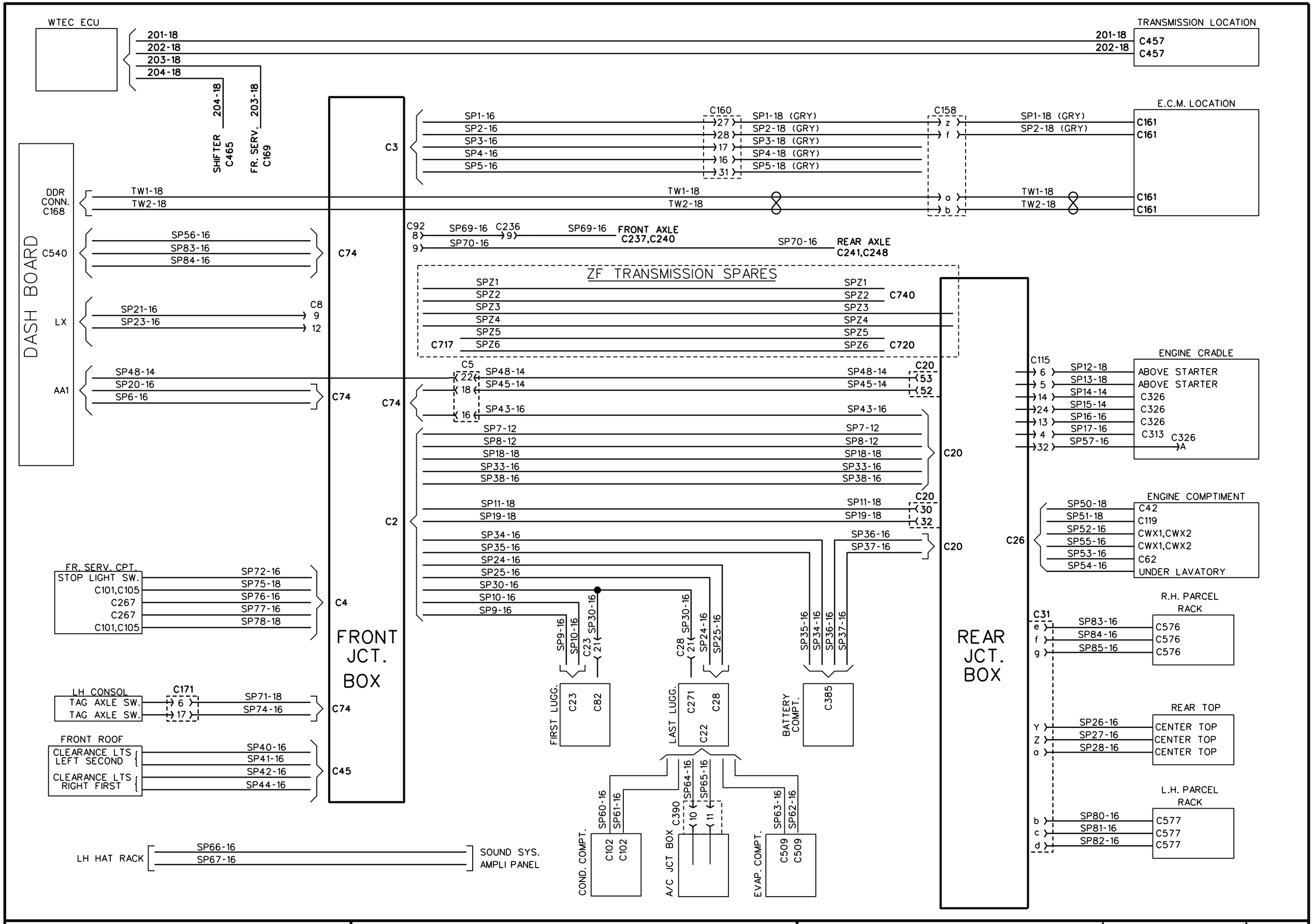

PREVOST CAR inc.	WIRING DIAGRAM	NO: D060993	P. D	REVISION 04

CIRCUIT NUMBER C0DE

N0.	DESCRIPTI0N
A1	RADIO SYSTEM
A2	RADIO SYSTEM
A3	AUDIO AMPLI
A8	VIDEO SYSTEM
A9	RADIO SYSTEM
A10	AUDIO AMPLI
A11	AUDIO AMPLI
A12	AUDIO AMPLI
A13	AUDIO AMPLI
A15	AUDIO AMPLI
A16	VIDEO SYSTEM
B1	MICROPHONE
B2	MICROPHONE
B3	MICROPHONE
B4	MICROPHONE
B5	MICROPHONE
B6	MICROPHONE
B7	MICROPHONE
B8	MICROPHONE
B10	MICROPHONE
B11	MICROPHONE
B12	MICROPHONE
B1A	FLUORESCENT BALLAST
B1B	FLUORESCENT BALLAST
B2A	FLUORESCENT BALLAST
B2B	FLUORESCENT BALLAST
B3A	FLUORESCENT BALLAST
B3B	FLUORESCENT BALLAST
B4A	FLUORESCENT BALLAST
B4B	FLUORESCENT BALLAST
B5A	FLUORESCENT BALLAST
B5B	FLUORESCENT BALLAST
B6A	FLUORESCENT BALLAST
B6B	FLUORESCENT BALLAST
B7A	FLUORESCENT BALLAST
B7B	FLUORESCENT BALLAST
B14	RADIO SYSTEM
B15	RADIO SYSTEM
C2	RADIO SYSTEM
C3	CONTROL HEAD ANTENNA
C5	VIDEO SYSTEM
C6	CONTROL HEAD DIMMER
C7	RADIO SYSTEM
C8	AUDIO AMPLI
C9	VIDEO SYSTEM
C10	VIDEO SYSTEM
C11	VIDEO SYSTEM
C12	VIDEO SYSTEM
C13	VIDEO SYSTEM
C14	VIDEO SYSTEM

N0.	DESCRIPTI0N
C15	AUDIO AMPLI
D1	PASSENGER SPEAKER
D2	PASSENGER SPEAKER
D3	PASSENGER SPEAKER
D4	PASSENGER SPEAKER
D5	PASSENGER SPEAKER
D6	PASSENGER SPEAKER
D7	PASSENGER SPEAKER
D8	PASSENGER SPEAKER
DR1	DRIVER'S SPEAKER
DR2	DRIVER'S SPEAKER
DR3	DRIVER'S SPEAKER
DR4	DRIVER'S SPEAKER
G1	PASSENGER SPEAKER
G2	PASSENGER SPEAKER
G3	PASSENGER SPEAKER
G4	PASSENGER SPEAKER
G5	PASSENGER SPEAKER
G6	PASSENGER SPEAKER
G7	PASSENGER SPEAKER
G8	PASSENGER SPEAKER
IPJ1	CLUSTER – BULB TEST POS
IPJ2	CLUSTER – BULB TEST NEG.
IPJ5	CLUSTER – FUEL GAUGE
IPJ6	CLUSTER – BULB TEST POS.
IPJ7	CLUSTER – BULB TEST NEG.
IPJ8	CLUSTER – MASTER WARNING
L8	WATER TANK HEATER
L9	WATER TANK HEATER
LX5	CLUSTER – COMPUTER MODE
LX6	CLUSTER – COMPUTER DOWN
LX7	CLUSTER – COMPUTER SET
LX16	CLUSTER – COMPUTER UP
LX21	CLUSTER – COMPUTER COM.
R1A	FLUORESCENT BALLAST
R1B	FLUORESCENT BALLAST
RT	T.T.L.T. MODULE – TEST SW.
SPK1	PASSENGER SPEAKER
SPK2	PASSENGER SPEAKER
SPK3	PASSENGER SPEAKER
SPK4	PASSENGER SPEAKER
SP1	SPARE WIRE
SP2	SPARE WIRE
SP3	SPARE WIRE
SP4	SPARE WIRE
SP5	SPARE WIRE
SP6	SPARE WIRE
SP7	SPARE WIRE
SP8	SPARE WIRE
SP9	SPARE WIRE

N0.	DESCRIPTI0N
SP10	SPARE WIRE
SP11	SPARE WIRE
SP12	SPARE WIRE
SP13	SPARE WIRE
SP14	SPARE WIRE
SP15	SPARE WIRE
SP16	SPARE WIRE
SP17	SPARE WIRE
SP18	SPARE WIRE
SP19	SPARE WIRE
SP20	SPARE WIRE
SP21	SPARE WIRE
SP23	SPARE WIRE
SP24	SPARE WIRE
SP25	SPARE WIRE
SP26	SPARE WIRE
SP27	SPARE WIRE
SP28	SPARE WIRE
SP30	SPARE WIRE
SP33	SPARE WIRE
SP34	SPARE WIRE
SP35	SPARE WIRE
SP36	SPARE WIRE
SP37	SPARE WIRE
SP38	SPARE WIRE
SP40	SPARE WIRE
SP41	SPARE WIRE
SP42	SPARE WIRE
SP43	SPARE WIRE
SP44	SPARE WIRE
SP45	SPARE WIRE
SP48	SPARE WIRE
SP50	SPARE WIRE
SP51	SPARE WIRE
SP52	SPARE WIRE
SP53	SPARE WIRE
SP54	SPARE WIRE
SP55	SPARE WIRE
SP56	SPARE WIRE
SP57	SPARE WIRE
SP60	SPARE WIRE
SP61	SPARE WIRE
SP62	SPARE WIRE
SP63	SPARE WIRE
SP64	SPARE WIRE
SP65	SPARE WIRE
SP69	SPARE WIRE
SP70	SPARE WIRE
SP71	SPARE WIRE
SP72	SPARE WIRE

N0.	DESCRIPTI0N
SP74	SPARE WIRE
SP75	SPARE WIRE
SP76	SPARE WIRE
SP77	SPARE WIRE
SP78	SPARE WIRE
SP80	SPARE WIRE
SP81	SPARE WIRE
SP82	SPARE WIRE
SP83	SPARE WIRE
SP84	SPARE WIRE
SP85	SPARE WIRE
SPZ1	SPARE WIRE-ZF TRANSM.
SPZ2	SPARE WIRE-ZF TRANSM.
SPZ3	SPARE WIRE-ZF TRANSM.
SPZ4	SPARE WIRE-ZF TRANSM.
SPZ5	SPARE WIRE-ZF TRANSM.
SPZ6	SPARE WIRE-ZF TRANSM.
TW1	TWISTED SPARE
TW2	TWISTED SPARE
W1	STEERING BOX CONVERTER
W2	STEERING BOX CONVERTER
Y1A	FLUORESCENT BALLAST
Y1B	FLUORESCENT BALLAST
Y2A	FLUORESCENT BALLAST
Y2B	FLUORESCENT BALLAST
Y3A	FLUORESCENT BALLAST
Y3B	FLUORESCENT BALLAST
Y4A	FLUORESCENT BALLAST
Y4B	FLUORESCENT BALLAST
Y5A	FLUORESCENT BALLAST
Y5B	FLUORESCENT BALLAST
Y6A	FLUORESCENT BALLAST
Y6B	FLUORESCENT BALLAST
Y7A	FLUORESCENT BALLAST
Y7B	FLUORESCENT BALLAST
0	BATTERY – MAIN GROUND
0	EVAP. COMPT. GROUND
0	RJB – INSIDE GRD
0	WCL MODULE
0	INVERTER CUT OFF RELAY
0A	LAVATORY ACCESSORIES
0A	EVAP. FAN GROUND
0A	FR. ROOF ACC. GRD
0B	BOOSTER BLOCK GROUND
0B	A/C – CONDENSER GRD
0B	24V&12V CUT OUT REL.COIL
0BE	OV BATTERY MONITOR
0C	R.J.B. - GRB
0C	MOTOR STARTER GROUND
0C	F.R. SERV. CPT- ACC.

CIRCUIT NUMBER C0DE

N0.	DESCRIPTI0N
0C1	ENTRACE DOOR SEDAN
0C2	STEERING CONTROL GROUND
0C3	SOUND SYSTEM RELAY
0C4	F.J.B. GRD
0CJ	CRUISE SW. JUMPER
0D	FLUORESCENT GRD
0D	COND FAN GRD
0E	BATT. COMPT. LTS GROUND
0E	READING LIGHTS GROUND
0F	FLUORESCENT GRD
0F	PRO-DRIVER GROUND
0G	READING LIGHTS GROUND
0H	ENG. CPT. – ACC. GRD
0IN	INTERCOM SYSTEM
0J	PARCEL RACK A/C UNIT
0K	PARCEL RACK A/C UNIT
0L	ENG.CPT –CLEAR.LTS RR ROOF
0L	R.J.B. - GRD
0L	FR – SIDE MARK. & FLASH GRD
0L1	ENG.CPT–SIDE MARK. & FL. GRD
0L2	HEAD LTS GROUND
0L3	FR.SERV.DR. & ENT.DOOR GRD
0L4	FOG LTS RESISTOR GRD
0L5	LH CONSOL – ACC. GRD
0L5	W.C.L.DOOR
0L6	MARKER&FLASH. GROUND
0L7	AISLE LIGHTS GROUND
0L8	DOCKING LTS
0LV	WINDSHIELD WASHER LEVEL
0M	WIPER 2 MIRROR MOTOR
0M3	DEFROST GRD
0M4	HORN & DR'S WINDOW LIFTER
0M5	SUN VISOR MOTOR
0M6	UPPER FAN DEFROST
0M7	DR'S WIND.LIFT. & RH MIR. SW
0M7A	LH MIRROR SW.
0P	ENG.CDT – PRE-HEATER
0R	SOUND SYSTEM RELAY GROUND
0SA	BOSCH ALTERNATOR GROUND
0SA	PARCEL RACK LTS SWITCH
0SB	PARCEL RACK LTS SWITCH
0SC	PARCEL RACK LTS SWITCH
0SE	PARCEL RACK LTS SWITCH
0SF	PARCEL RACK LTS SWITCH
0SG	PARCEL RACK LTS SWITCH
0SH	PARCEL RACK LTS SWITCH
0SJ	PARCEL RACK LTS SWITCH
0SS	SOUND SYSTEM GROUND

N0.	DESCRIPTI0N
00SS	SOUND SYSTEM GROUND
0S2	RADIO GROUND
0S3	VIDEO GROUND
0T	LAVATORY FAN & PUMP
0T	SPEED SW. CONNECTOR
0T1	DASH ACC. GROUND
0T2	CLUSTER ACC. GROUND
0T2	WINDOW AWNING
0T3	ALTERNATOR MODULE
0T4	12V OUTLET – CTR MODULE
0T5	FS.HVAC DASH MODULE. GND
0VA	BATTERY EQUALIZER GROUND
0W	FJB – TRANSM. RLY GRD
0W	SHIFT SELECTOR GROUND
0W	WCL MODULE
0WA	WCL DOOR AJAR
0WC	WCL BATTERY CPT. ACCES.
0WL	WCL SIGNAL DOOR AJAR ALARM
0Y1	ABS SYSTEM-GRD
0Y2	ABS SYSTEM-GRD
0Y3	ABS SYSTEM-GRD
0Y4	ABS SYSTEM-GRD
0Y5	ABS SYSTEM-GRD
0Y6	ABS SYSTEM-GRD
0Z1	ZF TRANSM. GRD
0Z2	ZF TRANSM. GRD
00A	ELECTRONIC TERMINAL GROUND
00F	FRONT ELECTRONIC GROUND
2B	A/C & HEAT SYSTEM
2D	A/C & HEAT SYSTEM
2DD	A/C & HEAT SYSTEM
2E	A/C & HEAT SYSTEM
2EE	A/C & HEAT SYSTEM
2F	A/C & HEAT SYS.-EVAP. SPEED
2H	A/C & HEAT SYS–LO-PRESS SW.
2L	A/C & HEAT SYS–HI-PRESS SW.
4A	HOTESS CHIME MAIN SWITCH
4C	HOTESS CHIME P. RACK SW.
5	AISLE LTS FEEDING
5N	EMERGENCY LTS
5N0	SPEED SIGNAL HIGHER 5MPH
5NC	SPEED SIGNAL LOWER 5MPH
6	AISLE LTS
7B	ENTRANCE DOOR FEED.-24V HW
9	INTERIOR LTS-ENGINE CPT
9F	INTERIOR LTS – FR-SERV. CPT
10	INTERIOR LTS-LUGGAGE CPT
10	INTERIOR LTS-FR SERV. CPT

N0.	DESCRIPTI0N
10A	INTERIOR LTS-LUGGAGE CPT
10A	AUX. COMPRESSOR CLUTCH
10B	INTERIOR LTS-LUGGAGE CPT
10C	INTERIOR LTS-LUGGAGE CPT
10E	INTERIOR LTS-BATTERY CPT
10H	AUX. COMPRESSOR CLUTCH
10L	AUX. COMPRESSOR CLUTCH
10X	AUX. COMPRESSOR CLUTCH
11	DESTINATION SIGN
11A	DESTINATION SIGN
11B	DESTINATION SIGN
11C	DESTINATION SIGN
11D	DESTINATION SIGN
11E	DESTINATION SIGN
11K	DESTINATION SIGN
11J	DESTINATION SIGN
11P	DESTINATION SIGN
12	12V ELECTRONIC TERMINAL
12A	FR JCT PANEL 12V DISC SW
12A	BATT. JCT PANEL 12V DISC SW
12B	FR JCT PANEL 12V DISC SW
12BE	12V BATTERY MONITOR
12C	FR JCT PANEL 12V DISC SW
12C	RR JCT BOX 12V DISC SW
12D	BATT. JCT PANEL 12V HOT WIRE
12D	FR JCT PANEL 12V HOT WIRE
12D	RR JCT PANEL 12V HOT WIRE
12DD	FR JCT PANEL 12V HOT WIRE
12DDR	FR JCT BOX 12V HOT DDR CONN
12DT	T.T. LT MODULE
12DZ	ZF TRANSM. 12V HOT WIRE
12E	FR JCT PANEL 12V DISC SW
12F	RR JCT PANEL 12V DISC SW
12F1	FR JCT PANEL 12V DISC SW
12F2	FR JCT PANEL 12V DISC SW
12FL	RR JCT PANEL 12V DISC SW
12G	FR JCT PANEL 12V DISC SW
12H	12V IGN. DASH ACCESS.
12I	RR JCT BOX 12V IGNITION
12I	FR JCT PANEL 12V IGNITION
12IA	FR JCT PANEL 12V IGNITION
12IA	RR JCT PANEL 12V IGNITION
12IB	FR JCT PANEL 12V IGNITION
12IB	STEERING BOX ECU FEEDING
12IE	ABS-FR JCT PANEL 12V IGN.
12IZ	ZF TRANSM. IGNITION
12IN	12 VOLTS DISC.SW. INTERCOM
12J	FR JCT PANEL 12V DISC.SW.
12K	FR JCT PANEL 12V DISC.SW.

N0.	DESCRIPTI0N
12L	CORNERING LTS FEEDING
12LX	CLUSTER 12V HOT WIRE
12M	ABS-FR JCT PNL 12V DISC.SW
12P	12V BATTERY JCT BLOCK
12R	12V MEMORY RADIO
12P	12V POWER OUTLET
12SB	12V SOUND SYSTEM FEEDING
12SS	12V SOUND SYSTEM FEEDING
12S	12V RADIO FEEDING
12S1	12V RADIO FEEDING
12S1A	12V DVD KARAOKE FEEDING
12S2	12V RADIO FEEDING
12S2A	12V DVD KARAOKE FEEDING
12T	RR JCT BOX 12V DISC SW
12VA	12V BATTERY EQUALIZER
12VB	FR JCT PANEL 12V DISC SW
12VD	12V HOT WIRE DISTRIBUTION
12VE	FR JCT PANEL 12V DISC SW
12VF	12 VOLTS FRONT DISTRIBUTIUON
12VG	RR JCT PANEL 12V DISC SW
12VI	12V IGNITION DISTRIBUTION
12VO	12V BATTERY EQUALIZER
12VR	12V REAR DISTRIBUTION
12W	12V HOT WIRE DDEC FEEDING
12WA	ENTRANCE DOOR SYSTEM
12WR	WCL DOOR TOP LT
14	LAVATORY PUMP
14A	LAVATORY PUMP- P.BUTTON
14P	LAVATORY PUMP
15	WIPER & WASHER FEEDING
16	SPEEDOMETER (+)
16T	SPEED SW SIGNAL IN (+)
17	EXTERIOR LTS-FLASHER UNIT
17A	EXTERIOR LTS-FLASHER UNIT
17C	JUMPER LTS SW. - HAZARD
18	UPPER FAN DEFROST
19	UPPER FAN DEFROST
20	SPEEDOMETER SIGNAL (-)
21	LEFT DIRECTIONNAL LTS
21A	LEFT DIRECTIONNAL LTS SIGN.
21B	HAZARD SWITCH SIGNAL
21BB	LEFT DIRECTIONNAL LTS FEED.
21H	EXTERIOR LTS-HAZARD SIGNAL
21M	AUX. LTS – DIRECTIONAL LH
23	RIGHT DIRECTIONNAL LTS
23A	RIGHT DIRECTIONNAL LTS SIGN.
23BB	RIGHT DIRECTIONNAL LTS FEED.

CIRCUIT NUMBER C0DE

N0.	DESCRIPTI0N
23H	EXTERIOR LTS-HAZARD SIGNAL
23K	RIGHT DIRECT. LTS W/KNELLING
23M	AUX LTS – DIRECTIONAL RH
24	24 VOLTS BATTERY DIST.
24	24 V. DISC. FRONT DIST.
24A	BATT. JCT PANEL 24V DISC SW
24A	24V BOOSTER BLOCK
24A	FR JCT PANEL 24V DISC. SW
24A	RR JCT PANEL 24V DISC. SW
24BE	BATTERY MONITOR
24C	FR JCT PANEL 24V DISC SW
24D	24 V. HOT WIRE FEEDING
24D	FR JCT BOX 24V HOT WIRE
24DD	FR JCT BOX 24V HOT WIRE
24DS	WIRELSS MICRO FEEDING
24E	24 VOLTS POWER DISTRIBUTION
24E	RR JCT PANEL 24V DISC SW
24F	RR JCT PANEL 24V DISC SW
24G	FR JCT PANEL 24V DISC SW
24H	RR JCT PANEL 24V DISC SW
24I	FR JCT PANEL 24V IGNITION
24IA	RR JCT PANEL 24V IGNITION
24IA	FR JCT PANEL 24V IGNITION
24IB	FR JCT PANEL 24V IGNITION
24IF	FR JCT PANEL 24V IGNITION
24IZ	FR JCT COMPT
24K	RR JCT PANEL 24V DISC SW
24L	RR JCT PANEL 24V DISC SW
24M	RR JCT PANEL 24V DISC SW
24P	FR JCT PANEL 24V DISC SW
24P2	RR BENCH- INVERTER
24PV	RR BENCH- INVERTER
24R	24V STARTER RELAY
24R	SCENIC VIEW SIGNAL ON
24SB	24V SOUND SYSTEM FEEDING
24SS	24V SOUND SYSTEM FEEDING
24S1	AMPLIFIER FEEDING
24S2	AMPLIFIER FEEDING
24S3	VIDEO FEEDING
24S4	VIDEO FEEDING
24T	RR JCT PANEL 24V DISC SW
24VA	24 VOLTS BATTERY EQUALIZER
24VD	24V HOT WIRE FEED
24VF	24 VOLTS FRONT DISTRIBUTION
24VI	24 VOLTS IGNITION REAR DIST.
24VR	24 VOLTS REAR DISTRIBUTION
24Y	24 VOLTS POWER GALLEY
24WC	WCL PUMP FEEDING

N0.	DESCRIPTI0N
24WL	WCL PUMP FEEDING
24WR	WCL POWER ACCES.
25	EITHER ALTERNAT. RUN SIGNAL
25A	TT.LT. ALTERNATOR #1
25A1	BOSCH ALTERNATOR SIGNAL D+
25A2	BOSCH ALTERNATOR SIGNAL D+
25B	EXT. LTS-DAYTIME RUN LTS
25D	BOTH ALTERNATOR RUN SIGNAL
25K	T.T LT. ALTERNATOR #2
26	DR'S & ENT. WINDOW LIFTER
26A	CIGAR LIGHT. & POW.OUTLET LH
26B	DRIVER'S WINDOW LIFTER
26C	DRIVER'S WINDOW LIFTER
27	LAVATORY ALARM
28H	T.T.LT MODULE – HI A/C PRES.
28T	T.T.LT MODULE – LO A/C PRES.
29	A/C & HEAT SYS.-DR'S HTR
29H	HVAC DASH MODILE
30A	GALLEY SWITCH SIGNAL
30J	GALLEY SWITCH LED
31B	WIPER & WASHER SYSTEM
32	EXTERIOR LTS-BACK-UP
32B	EXTERIOR LTS-BACK-UP
35	ENTRANCE STEP LIGHTS
36	ENGINE BRAKE SYSTEM
36A	ENGINE BRAKE SYSTEM & RET.
37	LAVATORY LTS FEEDING
38	FLUORESCENT RELAY FEEDING
38A	R.H FLUORESCENT
38B	L.H. FLUORESCENT
38C	FLUORESCENT FEEDING
39	INTERIOR LTS-DRIVER'S LTS
39D	INTERIOR LTS – DRIVER' LTS
41	A/C SYS.-COND FAN MOTOR
41A	A/C SYS.-COND FAN MOTOR
41B	A/C SYS.-COND FAN MOTOR
42	A/C SYS.-COND FAN MOTOR
42A	A/C SYS.-COND FAN MOTOR
43	PARCEL RACK A/C
43A	PARCEL RACK A/C
43B	PARCEL RACK A/C
43C	PARCEL RACK A/C
43D	PARCEL RACK A/C
43E	PARCEL RACK A/C
43F	PARCEL RACK A/C
43G	PARCEL RACK A/C
43M	PARCEL RACK A/C

N0.	DESCRIPTI0N
43X	PARCEL RACK A/C
44	EXTERIOR LTS-FOG
44A	EXTERIOR LTS-FOG
44B	EXTERIOR LTS-FOG
44C	FOG,LTS & HVAC FEEDING
44D	EXTERIOR LTS - FOG
44E	EXTERNAL LTS - FOG
45A	A/C & HEAT SYSTEM FULL AIR
45B	A/C & HEAT SYS.-WATER PUMP
45C	A/C & HEAT SYS.-WATER VALV
45D	A/C & HEAT SYS.-WATER VALV
45G	A/C & HEAT SYS.-DR'S HTR
45H	A/C & HEAT SYS.-EVAP. SPEED
46	EXTERIOR LTS-MARKER
46A	EXTERIOR LTS-AUX LTS RESIS.
46C	EXTERIOR LTS-MARKER
46D	EXTERIOR LTS-AUX LTS RESIS.
48	ENTRANCE DOOR OPEN SIGNAL
48A	ENTRANCE DOOR OPEN SOL.
48B	ENTRANCE DOOR OPEN SIGNAL
48C	ENTRANCE DOOR SYSTEM
48D	ENTRANCE DOOR SYSTEM
48W	ENTRANCE DOOR SEDAN
49	ÈNTRANCE DOOR CLOSE SIGNAL
49A	ENTRANCE DOOR SYSTEM
49B	ENTRANCE DOOR SYSTEM
50	AIR DRYER
52	ALARM & SIGNAL-ELEC.HORN
52A	ALARM & SIGNAL-ELEC.HORN
52B	PNEUMATIC HORN
53	ALARM & SIGNAL-ELEC.HORN
53B	WIPER & WASHER SYSTEM
53C	WIPER & WASHER SYSTEM
53E	WIPER & WASHER SYSTEM
53J	WIPER & WASHER SYSTEM
55	EXTERIOR LTS-HI BEAM
57	EXTERIOR LTS-HI BEAM
57A	EXTERIOR LTS-HI BEAM
57B	A/C & HEAT SYS.-WATER PUMP
57C	A/C & HEAT SYS.-WATER PUMP
57E	A/C & HEAT SYS.-WATER VALV
57W	PRE-HEAT WATER HEATER
58	EXTERIOR LTS-LO BEAM
58A	EXTERIOR LTS-LO BEAM
58B	EXTERIOR LTS-LO BEAM
59A	ENGINE BRAKE SYSTEM
61	EXTERIOR LTS-24V FEED SW
61A	EXTERIOR LTS-HEAD SIGNAL
62	LAVATORY INDICATOR

N0.	DESCRIPTI0N
63	EXTERIOR LTS-CLEAR. FEED
63B	EXTERIOR LTS-CLEARANCE
63C	EXT. LTS-MARKER SIGNAL
63D	BLINKER RELAY
63E	BLINKER RELAY
63F	EXT. LTS-MARKER BLINKER
64	DRIVER'S FAN SPEED CTR
64A	A/C SPARE
64B	A/C SPARE
65	FOOT DAMPER MOTOR
65A	FOOT DAMPER MOTOR
65D	DRIVER'S REC. DAMPER
65E	DRIVER'S REC. DAMPER L.H.
65F	DRIVER'S REC. DAMPER L.H.
66	A/C PASSENGER – ON/OFF
67A	A/C & HEAT SYSTEM
68	DASH & DEFROST DAMPER MOT
68A	DASH & DEFROST DAMPER MOT
69	DAMPER MIX LIMIT SWITCH
70	HAT RACK & NIGHT LTS FEEDING
72	SUN VISOR - FEED
72A	SUN VISOR RH
72B	SUN VISOR RH
72C	SUN VISOR LH
72D	SUN VISOR LH
74	R.H. READING LAMP FEEDING
74A	R.H. HOTESS CHIME FEEDING
74B	WCL R.H. READING LAMP FEED.
74D	READING LAMP SWITCH
74J	READING LAMP INDICATOR SW.
75	L.H. READING LAMP FEEDING
75A	L.H. HOTESS CHIME FEEDING
76	FUEL TANK GAUGE
76C	LOW FUEL T.T.LT
76M	FUEL PRIME PUMP
76P	FUEL PRIME PUMP FEEDING
77B	A/C SYS. – LIQ. SOL. VALVE
77C	A/C & HEAT SYS.-COMPRESSOR
77H	A/C SYS.-LIQ. SOL. VALVE
81	EXTERIOR LTS-STOP SW
82	EXTERIOR LTS-STOP SIGNAL
82A	EXTERIOR LTS-STOP SIGNAL
82B	EXTERIOR LTS-STOP LTS
82C	EXTERIOR LTS-STOP LTS
82L	EXT. LTS-STOP LTS & CYCLOP
82R	EXTERIOR LTS-STOP LTS
83	ENG. CTR-MAST. KEY SW ACC.

CIRCUIT NUMBER C0DE

N0.	DESCRIPTI0N
83A	24V&12V CUT RELAY COIL
83B	24V&12V CUT RELAY COIL
84	ENG. CTR-MAST KEY SW START
84A	ENG. CTR-MAST KEY SW START
84J	ENG. CTR-MAST KEY SW START
85	24V IGNITION SIGNAL
85A	24V IGN DASH INSTRUMENT.
85C	24V IGNITION - FEED
85F	RAD. FAN CONTROL W/RETARD
85W	OUT SPEED INTERLOCK–24V IGN.
85X	ABS-24V IGN
85Y	ABS-WARNING LT
86	ENG. CTR-STARTER SOL.
86A	ENG. CTR-STARTER RELAY COIL
86F	TELL TALE STARTER ON
86T	TELL TALE STARTER ON
87B	ENGINE CTR-24V IGNITION
88	ENGINE CTR-RR START SIGNAL
89	ENGINE CTR-RR START SIGNAL
90	DASH MAGNETIC SWITCH
90B	ENG. CTR-MAST KEY SW FEED
91	PARKING BRAKE SW SIGNAL
91A	DDEC -FAST IDLE SIGNAL
91B	D.R.L. CANCEL RELAY
91C	PARKING BRAKE – T.T.LT
91J	FAST IDLE – JUMPER SW.
91W	WCL PARKING BRAKE SIGNAL
92	BATT. EQUAL.-CHECK BALANCE
93	BATT. EQUALIZ.-CHECK LO/HI
95A	ENG. BRAKE & RETARDER SYS.
95B	ENG. BRAKE & RETARDER SYS.
100	INTERIOR LTS RELAY COIL
100	INDIRECT LTS FEEDING
100A	INDIRECT LTS RELAY COIL
100B	INDIRECT LTS FEEDING
100C	INDIRECT LTS FEEDING
101	24 VOLTS POWER STARTER
101	WORLD TR..– LO SIGN SOL.LO
102	24 VOLTS A/C DISTRIBUTION
102	WORLD TRANSM.–SOL. SUPPLY
102A	BOSCH ALTERNATOR FEEDING
103	WORLD TRANSM.- B.SOL.LO
103	LOW BUOY SYSTEM
104	WORLD TR. –G SOL.
105W	WORLD TR-SOL.–RET.OIL TT.LT
107	WORLD TR. - SOL. SUPPLY
110	WORLD TR.-F SOL. LO

N0.	DESCRIPTI0N
112	WORLD TR.-SPARE OUTPUT (+)
113W	WORLD TR.-REVERSE WARNING
113Z	ZF TRANSM.- REVERSE
114	INTERIOR LT-DASH LT RHEOS.
114A	INTERIOR LT-DASH LT RHEOS.
114B	INT. LT-DASH LT RHEOST.FEED
115	DDEC -COOLANT LEVEL
115W	TRANSM.-DO NOT SHIFT SIGN
115W	ZF -CHECK TRANSM. TTLT
116	WORLD TR.-SOL. SUPPLY
116B	A/C & HEAT SYSTEM-DR'S HTR
116C	A/C SYS.–TRIG. DEFROST
119	WORLD TRANSM-ENGINE BRAKE
120	WORLD TRANSM-A SOL.
121	WORLD TRANSM-SOL.SUPPLY
123	WORLD TR.-NEUTRAL START
123A	ALARM & SIGNAL-FIRE DETECT.
123B	ALARM & SIGNAL-FIRE DETECT.
124	WORLD TR.-SENSOR POWER
124A	WORLD TRANSM-SENSOR PWR
125	LAVATORY FAN
125	WORLD TR-RETARDER INDICAT.
125W	WORLD TR-RETARDER INDICAT.
126	24 V IGN. SPEED SWITCH
126A	KNEELING SYSTEM
126AA	KNEELING SYSTEM
126B	HI-BUOY SIGNAL
126C	KNEELING SYSTEM
126D	KNEELING SYSTEM
126F	KNEELING SYSTEM
126G	KNEELING SYSTEM
126H	SPEED SIGN 5NC – 24V
126K	KNEELING SYSTEM
126L	KNEELING SYSTEM
126P	KNEELING SYSTEM
126R	KNEELING SYSTEM
126S	KNEELING SYSTEM
126T	KNEELING SYSTEM
126W	KNEELING SYSTEM
126W	WORLD TRANSM-NOT USED
127	WORLD TRANSM. – H SOL.
127	24HOT WIRE PREHEAT
127A	PRE-HEAT WATER HEATER
127B	PRE-HEAT WATER HEATER
127S	PRE-HEAT WATER HEATER
128	WORLD TRANSM-B SOL.
128A	PRE-HEAT WATER HEATER

N0.	DESCRIPTI0N
128B	PRE-HEAT WATER HEATER
129	WORLD TRANSM-E SOL.
129	PRE-HEAT WATER HEATER
129B	PRE-HEAT WATER HEATER
130	WORLD TRANSM-SOL. SUPPLY
130	EVAP. FAN MAIN CABLE
130A	EVAP. FAN MAIN CABLE
131	WORLD TRANSM-D SOL.
132	WORLD TRANSM-ENGINE BRAKE
133	GALLEY HEATING CONTAINER
133A	GALLEY HEATING CONTAINER
133B	GALLEY HEATING CONTAINER
133C	GALLEY HEATING CONTAINER
134	GALLEY HEATING CONTAINER
134A	GALLEY HEATING CONTAINER
135	GALLEY HEATING CONTAINER
135A	WORLD TR.-RES MODULE RET.
135B	A/C & HEAT SYS.-AIR SENSOR
135C	A/C & HEAT SYS.-AIR SENSOR
136	MICRO-WAVE OVEN SWITCH
136A	GALLEY LAMP
136A	WORLD TRANSM-12V BATTERY
136A1	WORLD TRANSM-12V BATTERY
136A2	WORLD TRANSM-12V BATTERY
136AA	WORLD TRANSM-SHIFTER PWR
136V	WORLD TRANSM-12V BATTERY
136W	WORLD TRANSM-12V BATTERY
136X	WORLD TRANSM-12V BATTERY
137	WORLD TRANSM-RETARDER
137	RR VIEW MIRROR
137A	RR VIEW MIRROR
137B	RR VIEW MIRROR
137C	RR VIEW MIRROR
137D	RR VIEW MIRROR
137E	RR VIEW MIRROR
137F	RR VIEW MIRROR
137H	RR VIEW MIRROR
137J	RR VIEW MIRROR
137K	RR VIEW MIRROR
137L	RR VIEW MIRROR
137M	RR VIEW MIRROR FEED
137R	WORLD TRANSM-RETARDER
137T	MIRROR HEAT SW-JUMPER
138	WORLD TR.-RETARDER TEMP
138	ABS SYSTEM-SENSOR
138A	ABS SYSTEM-SENSOR
139	ABS SYSTEM-VALVE
139	WORLD TR.-OUTPUT SPEED HI
140	WORLD TR.-TURBINE SPEED LO

N0.	DESCRIPTI0N
140	ABS SYSTEM-VALVE
141	ABS SYSTEM-VALVE
141	WORLD TR.-ENGINE SPEED HI
142	ABS SYSTEM-VALVE
143	ABS SYSTEM-SENSOR
143A	ABS SYSTEM-SENSOR
143A	WORLD TRANS-BATERY GRD
143W	WORLD TRANSM-BATTERY GRD
143X	WORLD TRANSM-BATTERY GRD
143Y	WORLD TRANSM.BATT.GRD
143W	FROM GROUND STUD
144	ABS SYSTEM-SENSOR
144A	ABS SYSTEM-SENSOR
145	ABS SYSTEM
146	ABS SYSTEM
146A	WORLD TRANSM-12V IGNITION
146AA	WORLD TRANSM-DIAGN.CONN.
147	WORLD TRANSM-OIL TEMP
147	ABS SYSTEM-VALVE
147A	ETHER COLD START
147C	ETHER COLD START
148	ABS SYSTEM-VALVE
148	WORLD TR.-OUTPUT SPEED LO
149	WORLD TR.-TURBINE SPEED H
149	ABS SYSTEM-SENSOR
149A	ABS SYSTEM
150	WORLD TR.-ENGINE SPEED LO
150	DDEC -ECM BATTERY GRD
150A	DDEC -ECM BATTERY GRD
151	DDEC -ECM BATTERY GRD
151	ATC VALVE
152	ATC VALVE
153	ELECTRICAL DRIVER'S SEAT
154	WORLD TRANSM-ABS INPUT (-)
156A	ABS SYSTEM-FEED
157B	ABS SYSTEM
159	WORLD TRANSM-DIAGNOSTIC
160	ALARM & SIGN.-TAG PRESS SW
161B	WORLD TRANSM-SIGNALGRD
162	WORLD TRANSM-PRESS. SW C
163	WORLD TR.-RETARDER ENABLE
164	WORLD TR.-RET. ACTUAT. SIGN
165	WORLD TR.-OIL LEVEL SIGNAL
166	WORLD TRANSM. OUTPUT 7
167	W. TR.-OUT SPEED INTERLOCK
167Z	ZMTEC MODULE
169	WORLD TRANSM-PRE-SELECT #1
170	WORLD TRANSM-SHIFTER
170C	LUGGAGE DOOR LOCK-T.T.LT

CIRCUIT NUMBER C0DE

N0.	DESCRIPTI0N
170D	LUGGAGE DOOR LOCK-FEED
170E	LUG. DOOR LOCK-UNLOCK SIGN
170F	LUGGAGE DOOR LOCK-FEED
170G	LUGGAGE DOOR LOCK-FEED
170K	LUGGAGE DOOR-LOCK SIGN
170L	LUGG DOOR LOCK-SIGN T.T.LT
170N	LUGG DOOR LOCK-SIGN T.T.LT
170R	LUGG DOOR LOCK-SIGN. T.T.LT.
170S	LUGG DOOR LOCK-SIGN T.T.LT
170T	LUGG DOOR LOCK-SIGN T.T.LT
170V	LUGG DOOR LOCK-SIGN T.T.LT
170W	LUGGAGE DOOR LOCK-FEED
170X	LUGG DOOR LOCK-SIGN T.T.LT
170Y	LUGGAGE DOOR LOCK-FEED
170Z	LUGGAGE DOOR LOCK
171	WORLD TRANSM-SHIFTER
172	WORLD TRANSM-SHIFTER
173	WORLD TRANSM-SHIFTER
174	WORLD TRANSM-SHIFTER
175A	WORLD TRANSM-SHIFTER
176	WORLD TRANSM-SHIFTER
180	OUTSIDE TEMP. DISPLAY
180A	OUTSIDE TEMP. DISPLAY
180A	WORLD TRANSM-SHIFTER
180B	OUTSIDE TEMP. DISPLAY
180C	OUTSIDE TEMP. DISPLAY
181	FROZEN POINT T.T.LT
181A	TEMP. CTR'L INSIDE SENSOR
181B	TEMP. CTR'L INSIDE SENSOR
181C	THERMOMET. OUTSIDE SENSOR
181D	THERMOMET. OUTSIDE SENSOR
195	WORLD TRANSM-TRANS ID
197	FUEL WATER FILTER
197A	FUEL WATER FILTER
201	WORLD TRANSM-SPARE
202	WORLD TRANSM-SPARE
203	WORLD TRANSM-SPARE
204	WORLD TRANSM-SPARE
214	WORLD TR.-BACK-UP SIGNAL
231	WORLD TR.-NEUTRAL SIGN GRD
231F	WORLD TR.-NEUTRAL SIGN GRD
231W	W.TR.-NEUTRAL SIGN GRD WCL
231Z	ZF NEUTRAL SIGNAL
240	DDEC -ECM 12V FEEDING
241	DDEC -ECM 12V FEEDING
253	24V SIGNAL GALLEY INVERTER

N0.	DESCRIPTI0N
254	GALLEY REFRIGERATOR
254A	GALLEY REFRIGERATOR
254F	GALLEY REFRIGERATOR
255	GALLEY COFFEEMAKER
255A	GALLEY COFFEEMAKER
255B	GALLEY COFFEEMAKER
260	WINDOW AJAR-T.T.LT
290	FAN CLUTCH RADIATOR-FEED
290A	FAN CLUTCH RADIATOR-FEED
291	FAN CLUTCH RADIATOR SPD 1
292	FAN CLUTCH RADIATOR SPD 2
292J	FAN OVERRIDE LTS SWITCH
300	WCL POWER SYSTEM & ACCESS.
300A	WCL POWER SYSTEM SW.
301J	WCL POWER SW. JUMPER LED
301	WCL SIGNAL POWER SW.
302	WCL DOOR AJAR TTLT & ALARM
304	WCL DOOR TOP LT.
305	WCL PARKING BRAKE SOL. VALVE
305A	WCL DOOR OPEN SIGNAL
305B	WCL DOOR TOP LT.
306	WCL CONTROL SYSTEM
307	WCL CONTROL SYSTEM
308	WCL CONTROL SYSTEM
309	WCL CONTROL SYSTEM
417	DDEC-LIMIT SPEED GOVERNOR
419	DDEC -CHEK ENGINE LIGHT
439	DDEC-12V IGNITION
451	DDEC-A/C FAN CLUTCH
499	DDEC-OUTPUT PWR SHUTDOWN
505	DDEC-TACHOMETER DRIVE
509	DDEC-STOP ENGINE LIGHT
510	DDEC-FAST IDLE SIGNAL
524	DDEC-ENGINE BRAKEDISABLE
524B	ZF THROTTLE
525	DDEC-FAST IDLE SIGNAL
528	DDEC-STOP ENG. OVERRIDE
531	DDEC-CRUISE CLUTCH CUT OUT
540	DDEC-CRUISE ENABLE T.T.LT
541	DDEC-CRUISE SET SW
542	INPUT PARK BRAKE INTERLOCK
543	DDEC-CRUISE BRAKE PEDAL
544	DDEC-CRUISE ON/OFF SW
545	DDEC-CRUISE RESUME SW
555	DDEC-FAN CLUTCH SPEED#1
556	DDEC-VEHICULE SPEED (+)
557	DDEC-VEHICULE SPEED (-)
563	DDEC-FAN CLUTCH SPEED#2

N0.	DESCRIPTI0N
564	DDEC-DIGTAL OUTPUT
565	DDEC-ENGINE BRAKE ACTIVE
583	DDEC-ENGINE BRAKE 4 CYL.
700	J1587(+)
701	J1587(-)
705	ZF SIGNALS
706	ZF SIGNALS
707	ZF SIGNALS
717	ZF SIGNALS
718	ZF SIGNALS
719	ZF SIGNALS
720	ZF SIGNALS
740	EASY START VALVE
900	DDEC-DATA LINK (+)
901	DDEC-DATA LINK (-)
908	DDEC-HYDRAU. PWM#1 OUTPUT
916	DDEC-SENSOR SUPPLY (5VDC)
925	J1939(+)
926	J1939(-)
927	J1939(SHIELD)
952	DDEC-SENSOR RETURN
953	DDEC-BATTERY GRD
979	DDEC-ENGINE BRAKE 2 CYL.
2123	FLASHER SIGNAL LTS

N0.	DESCRIPTI0N

CIRCUIT NUMBER C0DE

N0.	DESCRIPTI0N
A1	RADIO SYSTEM
A2	RADIO SYSTEM
A3	AUDIO AMPLI
A8	VIDEO SYSTEM
A9	RADIO SYSTEM
A10	AUDIO AMPLI
A11	AUDIO AMPLI
A12	AUDIO AMPLI
A13	AUDIO AMPLI
A15	AUDIO AMPLI
A16	VIDEO SYSTEM
B1	MICROPHONE
B2	MICROPHONE
B3	MICROPHONE
B4	MICROPHONE
B5	MICROPHONE
B6	MICROPHONE
B7	MICROPHONE
B8	MICROPHONE
B10	MICROPHONE
B11	MICROPHONE
B12	MICROPHONE
B1A	FLUORESCENT BALLAST
B1B	FLUORESCENT BALLAST
B2A	FLUORESCENT BALLAST
B2B	FLUORESCENT BALLAST
B3A	FLUORESCENT BALLAST
B3B	FLUORESCENT BALLAST
B4A	FLUORESCENT BALLAST
B4B	FLUORESCENT BALLAST
B5A	FLUORESCENT BALLAST
B5B	FLUORESCENT BALLAST
B6A	FLUORESCENT BALLAST
B6B	FLUORESCENT BALLAST
B7A	FLUORESCENT BALLAST
B7B	FLUORESCENT BALLAST
B14	RADIO SYSTEM
B15	RADIO SYSTEM
C2	RADIO SYSTEM
C3	CONTROL HEAD ANTENNA
C5	VIDEO SYSTEM
C6	CONTROL HEAD DIMMER
C7	RADIO SYSTEM
C8	AUDIO AMPLI
C9	VIDEO SYSTEM
C10	VIDEO SYSTEM
C11	VIDEO SYSTEM
C12	VIDEO SYSTEM
C13	VIDEO SYSTEM
C14	VIDEO SYSTEM

N0.	DESCRIPTI0N
C15	AUDIO AMPLI
D1	PASSENGER SPEAKER
D2	PASSENGER SPEAKER
D3	PASSENGER SPEAKER
D4	PASSENGER SPEAKER
D5	PASSENGER SPEAKER
D6	PASSENGER SPEAKER
D7	PASSENGER SPEAKER
D8	PASSENGER SPEAKER
DR1	DRIVER'S SPEAKER
DR2	DRIVER'S SPEAKER
DR3	DRIVER'S SPEAKER
DR4	DRIVER'S SPEAKER
G1	PASSENGER SPEAKER
G2	PASSENGER SPEAKER
G3	PASSENGER SPEAKER
G4	PASSENGER SPEAKER
G5	PASSENGER SPEAKER
G6	PASSENGER SPEAKER
G7	PASSENGER SPEAKER
G8	PASSENGER SPEAKER
IPJ1	CLUSTER – BULB TEST POS
IPJ2	CLUSTER – BULB TEST NEG.
IPJ5	CLUSTER – FUEL GAUGE
IPJ6	CLUSTER – BULB TEST POS.
IPJ7	CLUSTER – BULB TEST NEG.
IPJ8	CLUSTER – MASTER WARNING
L8	WATER TANK HEATER
L9	WATER TANK HEATER
LX5	CLUSTER – COMPUTER MODE
LX6	CLUSTER – COMPUTER DOWN
LX7	CLUSTER – COMPUTER SET
LX16	CLUSTER – COMPUTER UP
LX21	CLUSTER – COMPUTER COM.
R1A	FLUORESCENT BALLAST
R1B	FLUORESCENT BALLAST
RT	T.T.L.T. MODULE – TEST SW.
SPK1	PASSENGER SPEAKER
SPK2	PASSENGER SPEAKER
SPK3	PASSENGER SPEAKER
SPK4	PASSENGER SPEAKER
SP1	SPARE WIRE
SP2	SPARE WIRE
SP3	SPARE WIRE
SP4	SPARE WIRE
SP5	SPARE WIRE
SP6	SPARE WIRE
SP7	SPARE WIRE
SP8	SPARE WIRE
SP9	SPARE WIRE

N0.	DESCRIPTI0N
SP10	SPARE WIRE
SP11	SPARE WIRE
SP12	SPARE WIRE
SP13	SPARE WIRE
SP14	SPARE WIRE
SP15	SPARE WIRE
SP16	SPARE WIRE
SP17	SPARE WIRE
SP18	SPARE WIRE
SP19	SPARE WIRE
SP20	SPARE WIRE
SP21	SPARE WIRE
SP23	SPARE WIRE
SP24	SPARE WIRE
SP25	SPARE WIRE
SP26	SPARE WIRE
SP27	SPARE WIRE
SP28	SPARE WIRE
SP30	SPARE WIRE
SP33	SPARE WIRE
SP34	SPARE WIRE
SP35	SPARE WIRE
SP36	SPARE WIRE
SP37	SPARE WIRE
SP38	SPARE WIRE
SP40	SPARE WIRE
SP41	SPARE WIRE
SP42	SPARE WIRE
SP43	SPARE WIRE
SP44	SPARE WIRE
SP45	SPARE WIRE
SP48	SPARE WIRE
SP50	SPARE WIRE
SP51	SPARE WIRE
SP52	SPARE WIRE
SP53	SPARE WIRE
SP54	SPARE WIRE
SP55	SPARE WIRE
SP56	SPARE WIRE
SP57	SPARE WIRE
SP60	SPARE WIRE
SP61	SPARE WIRE
SP62	SPARE WIRE
SP63	SPARE WIRE
SP64	SPARE WIRE
SP65	SPARE WIRE
SP69	SPARE WIRE
SP70	SPARE WIRE
SP71	SPARE WIRE
SP72	SPARE WIRE

N0.	DESCRIPTI0N
SP74	SPARE WIRE
SP75	SPARE WIRE
SP76	SPARE WIRE
SP77	SPARE WIRE
SP78	SPARE WIRE
SP80	SPARE WIRE
SP81	SPARE WIRE
SP82	SPARE WIRE
SP83	SPARE WIRE
SP84	SPARE WIRE
SP85	SPARE WIRE
SPZ1	SPARE WIRE-ZF TRANSM.
SPZ2	SPARE WIRE-ZF TRANSM.
SPZ3	SPARE WIRE-ZF TRANSM.
SPZ4	SPARE WIRE-ZF TRANSM.
SPZ5	SPARE WIRE-ZF TRANSM.
SPZ6	SPARE WIRE-ZF TRANSM.
TW1	TWISTED SPARE
TW2	TWISTED SPARE
W1	STEERING BOX CONVERTER
W2	STEERING BOX CONVERTER
Y1A	FLUORESCENT BALLAST
Y1B	FLUORESCENT BALLAST
Y2A	FLUORESCENT BALLAST
Y2B	FLUORESCENT BALLAST
Y3A	FLUORESCENT BALLAST
Y3B	FLUORESCENT BALLAST
Y4A	FLUORESCENT BALLAST
Y4B	FLUORESCENT BALLAST
Y5A	FLUORESCENT BALLAST
Y5B	FLUORESCENT BALLAST
Y6A	FLUORESCENT BALLAST
Y6B	FLUORESCENT BALLAST
Y7A	FLUORESCENT BALLAST
Y7B	FLUORESCENT BALLAST
0	BATTERY – MAIN GROUND
0	EVAP. COMPT. GROUND
0	RJB – INSIDE GRD
0	WCL MODULE
0	INVERTER CUT OFF RELAY
0A	LAVATORY ACCESSORIES
0A	EVAP. FAN GROUND
0A	FR. ROOF ACC. GRD
0B	BOOSTER BLOCK GROUND
0B	A/C – CONDENSER GRD
0B	24V&12V CUT OUT REL.COIL
0BE	OV BATTERY MONITOR
0C	R.J.B. - GRB
0C	MOTOR STARTER GROUND
0C	F.R. SERV. CPT- ACC.

CIRCUIT NUMBER C0DE

N0.	DESCRIPTI0N
0C1	ENTRACE DOOR SEDAN
0C2	STEERING CONTROL GROUND
0C3	SOUND SYSTEM RELAY
0C4	F.J.B. GRD
0CJ	CRUISE SW. JUMPER
0D	FLUORESCENT GRD
0D	COND FAN GRD
0E	BATT. COMPT. LTS GROUND
0E	READING LIGHTS GROUND
0F	FLUORESCENT GRD
0F	PRO-DRIVER GROUND
0G	READING LIGHTS GROUND
0H	ENG. CPT. – ACC. GRD
0IN	INTERCOM SYSTEM
0J	PARCEL RACK A/C UNIT
0K	PARCEL RACK A/C UNIT
0L	ENG.CPT –CLEAR.LTS RR ROOF
0L	R.J.B. - GRD
0L	FR – SIDE MARK. & FLASH GRD
0L1	ENG.CPT–SIDE MARK. & FL. GRD
0L2	HEAD LTS GROUND
0L3	FR.SERV.DR. & ENT.DOOR GRD
0L4	FOG LTS RESISTOR GRD
0L5	LH CONSOL – ACC. GRD
0L5	W.C.L.DOOR
0L6	MARKER&FLASH. GROUND
0L7	AISLE LIGHTS GROUND
0L8	DOCKING LTS
0LV	WINDSHIELD WASHER LEVEL
0M	WIPER 2 MIRROR MOTOR
0M3	DEFROST GRD
0M4	HORN & DR'S WINDOW LIFTER
0M5	SUN VISOR MOTOR
0M6	UPPER FAN DEFROST
0M7	DR'S WIND.LIFT. & RH MIR. SW
0M7A	LH MIRROR SW.
0P	ENG.CDT – PRE-HEATER
0R	SOUND SYSTEM RELAY GROUND
0SA	BOSCH ALTERNATOR GROUND
0SA	PARCEL RACK LTS SWITCH
0SB	PARCEL RACK LTS SWITCH
0SC	PARCEL RACK LTS SWITCH
0SE	PARCEL RACK LTS SWITCH
0SF	PARCEL RACK LTS SWITCH
0SG	PARCEL RACK LTS SWITCH
0SH	PARCEL RACK LTS SWITCH
0SJ	PARCEL RACK LTS SWITCH
0SS	SOUND SYSTEM GROUND

N0.	DESCRIPTI0N
00SS	SOUND SYSTEM GROUND
0S2	RADIO GROUND
0S3	VIDEO GROUND
0T	LAVATORY FAN & PUMP
0T	SPEED SW. CONNECTOR
0T1	DASH ACC. GROUND
0T2	CLUSTER ACC. GROUND
0T2	WINDOW AWNING
0T3	ALTERNATOR MODULE
0T4	12V OUTLET – CTR MODULE
0T5	FS.HVAC DASH MODULE. GND
0VA	BATTERY EQUALIZER GROUND
0W	FJB – TRANSM. RLY GRD
0W	SHIFT SELECTOR GROUND
0W	WCL MODULE
0WA	WCL DOOR AJAR
0WC	WCL BATTERY CPT. ACCES.
0WL	WCL SIGNAL DOOR AJAR ALARM
0Y1	ABS SYSTEM-GRD
0Y2	ABS SYSTEM-GRD
0Y3	ABS SYSTEM-GRD
0Y4	ABS SYSTEM-GRD
0Y5	ABS SYSTEM-GRD
0Y6	ABS SYSTEM-GRD
0Z1	ZF TRANSM. GRD
0Z2	ZF TRANSM. GRD
00A	ELECTRONIC TERMINAL GROUND
00F	FRONT ELECTRONIC GROUND
2B	A/C & HEAT SYSTEM
2D	A/C & HEAT SYSTEM
2DD	A/C & HEAT SYSTEM
2E	A/C & HEAT SYSTEM
2EE	A/C & HEAT SYSTEM
2F	A/C & HEAT SYS.-EVAP. SPEED
2H	A/C & HEAT SYS–LO-PRESS SW.
2L	A/C & HEAT SYS–HI-PRESS SW.
4A	HOTESS CHIME MAIN SWITCH
4C	HOTESS CHIME P. RACK SW.
5	AISLE LTS FEEDING
5N	EMERGENCY LTS
5N0	SPEED SIGNAL HIGHER 5MPH
5NC	SPEED SIGNAL LOWER 5MPH
6	AISLE LTS
7B	ENTRANCE DOOR FEED.-24V HW
9	INTERIOR LTS-ENGINE CPT
9F	INTERIOR LTS – FR-SERV. CPT
10	INTERIOR LTS-LUGGAGE CPT
10	INTERIOR LTS-FR SERV. CPT

N0.	DESCRIPTI0N
10A	INTERIOR LTS-LUGGAGE CPT
10A	AUX. COMPRESSOR CLUTCH
10B	INTERIOR LTS-LUGGAGE CPT
10C	INTERIOR LTS-LUGGAGE CPT
10E	INTERIOR LTS-BATTERY CPT
10H	AUX. COMPRESSOR CLUTCH
10L	AUX. COMPRESSOR CLUTCH
10X	AUX. COMPRESSOR CLUTCH
11	DESTINATION SIGN
11A	DESTINATION SIGN
11B	DESTINATION SIGN
11C	DESTINATION SIGN
11D	DESTINATION SIGN
11E	DESTINATION SIGN
11K	DESTINATION SIGN
11J	DESTINATION SIGN
11P	DESTINATION SIGN
12	12V ELECTRONIC TERMINAL
12A	FR JCT PANEL 12V DISC SW
12A	BATT. JCT PANEL 12V DISC SW
12B	FR JCT PANEL 12V DISC SW
12BE	12V BATTERY MONITOR
12C	FR JCT PANEL 12V DISC SW
12C	RR JCT BOX 12V DISC SW
12D	BATT. JCT PANEL 12V HOT WIRE
12D	FR JCT PANEL 12V HOT WIRE
12D	RR JCT PANEL 12V HOT WIRE
12DD	FR JCT PANEL 12V HOT WIRE
12DDR	FR JCT BOX 12V HOT DDR CONN
12DT	T.T. LT MODULE
12DZ	ZF TRANSM. 12V HOT WIRE
12E	FR JCT PANEL 12V DISC SW
12F	RR JCT PANEL 12V DISC SW
12F1	FR JCT PANEL 12V DISC SW
12F2	FR JCT PANEL 12V DISC SW
12FL	RR JCT PANEL 12V DISC SW
12G	FR JCT PANEL 12V DISC SW
12H	12V IGN. DASH ACCESS.
12I	RR JCT BOX 12V IGNITION
12I	FR JCT PANEL 12V IGNITION
12IA	FR JCT PANEL 12V IGNITION
12IA	RR JCT PANEL 12V IGNITION
12IB	FR JCT PANEL 12V IGNITION
12IB	STEERING BOX ECU FEEDING
12IE	ABS-FR JCT PANEL 12V IGN.
12IZ	ZF TRANSM. IGNITION
12IN	12 VOLTS DISC.SW. INTERCOM
12J	FR JCT PANEL 12V DISC.SW.
12K	FR JCT PANEL 12V DISC.SW.

N0.	DESCRIPTI0N
12L	CORNERING LTS FEEDING
12LX	CLUSTER 12V HOT WIRE
12M	ABS-FR JCT PNL 12V DISC.SW
12P	12V BATTERY JCT BLOCK
12R	12V MEMORY RADIO
12P	12V POWER OUTLET
12SB	12V SOUND SYSTEM FEEDING
12SS	12V SOUND SYSTEM FEEDING
12S	12V RADIO FEEDING
12S1	12V RADIO FEEDING
12S1A	12V DVD KARAOKE FEEDING
12S2	12V RADIO FEEDING
12S2A	12V DVD KARAOKE FEEDING
12T	RR JCT BOX 12V DISC SW
12VA	12V BATTERY EQUALIZER
12VB	FR JCT PANEL 12V DISC SW
12VD	12V HOT WIRE DISTRIBUTION
12VE	FR JCT PANEL 12V DISC SW
12VF	12 VOLTS FRONT DISTRIBUTIUON
12VG	RR JCT PANEL 12V DISC SW
12VI	12V IGNITION DISTRIBUTION
12VO	12V BATTERY EQUALIZER
12VR	12V REAR DISTRIBUTION
12W	12V HOT WIRE DDEC FEEDING
12WA	ENTRANCE DOOR SYSTEM
12WR	WCL DOOR TOP LT
14	LAVATORY PUMP
14A	LAVATORY PUMP- P.BUTTON
14P	LAVATORY PUMP
15	WIPER & WASHER FEEDING
16	SPEEDOMETER (+)
16T	SPEED SW SIGNAL IN (+)
17	EXTERIOR LTS-FLASHER UNIT
17A	EXTERIOR LTS-FLASHER UNIT
17C	JUMPER LTS SW. - HAZARD
18	UPPER FAN DEFROST
19	UPPER FAN DEFROST
20	SPEEDOMETER SIGNAL (-)
21	LEFT DIRECTIONNAL LTS
21A	LEFT DIRECTIONNAL LTS SIGN.
21B	HAZARD SWITCH SIGNAL
21BB	LEFT DIRECTIONNAL LTS FEED.
21H	EXTERIOR LTS-HAZARD SIGNAL
21M	AUX. LTS – DIRECTIONAL LH
23	RIGHT DIRECTIONNAL LTS
23A	RIGHT DIRECTIONNAL LTS SIGN.
23BB	RIGHT DIRECTIONNAL LTS FEED.

CIRCUIT NUMBER C0DE

N0.	DESCRIPTI0N
23H	EXTERIOR LTS-HAZARD SIGNAL
23K	RIGHT DIRECT. LTS W/KNELLING
23M	AUX LTS – DIRECTIONAL RH
24	24 VOLTS BATTERY DIST.
24	24 V. DISC. FRONT DIST.
24A	BATT. JCT PANEL 24V DISC SW
24A	24V BOOSTER BLOCK
24A	FR JCT PANEL 24V DISC. SW
24A	RR JCT PANEL 24V DISC. SW
24BE	BATTERY MONITOR
24C	FR JCT PANEL 24V DISC SW
24D	24 V. HOT WIRE FEEDING
24D	FR JCT BOX 24V HOT WIRE
24DD	FR JCT BOX 24V HOT WIRE
24DS	WIRELSS MICRO FEEDING
24DZ	ZF TRANSM. 24V HOT WIRE
24E	24 VOLTS POWER DISTRIBUTION
24E	RR JCT PANEL 24V DISC SW
24F	RR JCT PANEL 24V DISC SW
24G	FR JCT PANEL 24V DISC SW
24H	RR JCT PANEL 24V DISC SW
24I	FR JCT PANEL 24V IGNITION
24IA	RR JCT PANEL 24V IGNITION
24IA	FR JCT PANEL 24V IGNITION
24IB	FR JCT PANEL 24V IGNITION
24IF	FR JCT PANEL 24V IGNITION
24IZ	ZF TRANSM. IGNITION
24K	RR JCT PANEL 24V DISC SW
24L	RR JCT PANEL 24V DISC SW
24M	RR JCT PANEL 24V DISC SW
24P	FR JCT PANEL 24V DISC SW
24P2	RR BENCH- INVERTER
24PV	RR BENCH- INVERTER
24R	24V STARTER RELAY
24R	SCENIC VIEW SIGNAL ON
24SB	24V SOUND SYSTEM FEEDING
24SS	24V SOUND SYSTEM FEEDING
24S1	AMPLIFIER FEEDING
24S2	AMPLIFIER FEEDING
24S3	VIDEO FEEDING
24S4	VIDEO FEEDING
24T	RR JCT PANEL 24V DISC SW
24VA	24 VOLTS BATTERY EQUALIZER
24VD	24V HOT WIRE FEED
24VF	24 VOLTS FRONT DISTRIBUTION
24VI	24 VOLTS IGNITION REAR DIST.
24VR	24 VOLTS REAR DISTRIBUTION
24Y	24 VOLTS POWER GALLEY

N0.	DESCRIPTI0N
24WC	WCL PUMP FEEDING
24WL	WCL PUMP FEEDING
24WR	WCL POWER ACCES.
25	EITHER ALTERNAT. RUN SIGNAL
25A	TT.LT. ALTERNATOR #1
25A1	BOSCH ALTERNATOR SIGNAL D+
25A2	BOSCH ALTERNATOR SIGNAL D+
25B	EXT. LTS-DAYTIME RUN LTS
25D	BOTH ALTERNATOR RUN SIGNAL
25K	T.T LT. ALTERNATOR #2
26	DR'S & ENT. WINDOW LIFTER
26A	CIGAR LIGHT. & POW.OUTLET LH
26B	DRIVER'S WINDOW LIFTER
26C	DRIVER'S WINDOW LIFTER
27	LAVATORY ALARM
28H	T.T.LT MODULE – HI A/C PRES.
28T	T.T.LT MODULE – LO A/C PRES.
29	A/C & HEAT SYS.-DR'S HTR
29H	HVAC DASH MODILE
30A	GALLEY SWITCH SIGNAL
30J	GALLEY SWITCH LED
31B	WIPER & WASHER SYSTEM
32	EXTERIOR LTS-BACK-UP
32B	EXTERIOR LTS-BACK-UP
35	ENTRANCE STEP LIGHTS
36	ENGINE BRAKE SYSTEM
36A	ENGINE BRAKE SYSTEM & RET.
37	LAVATORY LTS FEEDING
38	FLUORESCENT RELAY FEEDING
38A	R.H FLUORESCENT
38B	L.H. FLUORESCENT
38C	FLUORESCENT FEEDING
39	INTERIOR LTS-DRIVER'S LTS
39D	INTERIOR LTS – DRIVER' LTS
41	A/C SYS.-COND FAN MOTOR
41A	A/C SYS.-COND FAN MOTOR
41B	A/C SYS.-COND FAN MOTOR
42	A/C SYS.-COND FAN MOTOR
42A	A/C SYS.-COND FAN MOTOR
43	PARCEL RACK A/C
43A	PARCEL RACK A/C
43B	PARCEL RACK A/C
43C	PARCEL RACK A/C
43D	PARCEL RACK A/C
43E	PARCEL RACK A/C
43F	PARCEL RACK A/C
43G	PARCEL RACK A/C

N0.	DESCRIPTI0N
43M	PARCEL RACK A/C
43X	PARCEL RACK A/C
44	EXTERIOR LTS-FOG
44A	EXTERIOR LTS-FOG
44B	EXTERIOR LTS-FOG
44C	FOG,LTS & HVAC FEEDING
44D	EXTERIOR LTS - FOG
44E	EXTERNAL LTS - FOG
45A	A/C & HEAT SYSTEM FULL AIR
45B	A/C & HEAT SYS.-WATER PUMP
45C	A/C & HEAT SYS.-WATER VALV
45D	A/C & HEAT SYS.-WATER VALV
45G	A/C & HEAT SYS.-DR'S HTR
45H	A/C & HEAT SYS.-EVAP. SPEED
46	EXTERIOR LTS-MARKER
46A	EXTERIOR LTS-AUX LTS RESIS.
46C	EXTERIOR LTS-MARKER
46D	EXTERIOR LTS-AUX LTS RESIS.
48	ENTRANCE DOOR OPEN SIGNAL
48A	ENTRANCE DOOR OPEN SOL.
48B	ENTRANCE DOOR OPEN SIGNAL
48C	ENTRANCE DOOR SYSTEM
48D	ENTRANCE DOOR SYSTEM
48W	ENTRANCE DOOR SEDAN
49	ÈNTRANCE DOOR CLOSE SIGNAL
49A	ENTRANCE DOOR SYSTEM
49B	ENTRANCE DOOR SYSTEM
50	AD-9 AIR DRYER
52	ALARM & SIGNAL-ELEC.HORN
52A	ALARM & SIGNAL-ELEC.HORN
52B	PNEUMATIC HORN
53	ALARM & SIGNAL-ELEC.HORN
53B	WIPER & WASHER SYSTEM
53C	WIPER & WASHER SYSTEM
53E	WIPER & WASHER SYSTEM
53J	WIPER & WASHER SYSTEM
55	EXTERIOR LTS-HI BEAM
57	EXTERIOR LTS-HI BEAM
57A	EXTERIOR LTS-HI BEAM
57B	A/C & HEAT SYS.-WATER PUMP
57C	A/C & HEAT SYS.-WATER PUMP
57E	A/C & HEAT SYS.-WATER VALV
57W	PRE-HEAT WATER HEATER
58	EXTERIOR LTS-LO BEAM
58A	EXTERIOR LTS-LO BEAM
58B	EXTERIOR LTS-LO BEAM
59A	ENGINE BRAKE SYSTEM
61	EXTERIOR LTS-24V FEED SW
61A	EXTERIOR LTS-HEAD SIGNAL

N0.	DESCRIPTI0N
62	LAVATORY INDICATOR
63	EXTERIOR LTS-CLEAR. FEED
63B	EXTERIOR LTS-CLEARANCE
63C	EXT. LTS-MARKER SIGNAL
63D	BLINKER RELAY
63E	BLINKER RELAY
63F	EXT. LTS-MARKER BLINKER
64	DRIVER'S FAN SPEED CTR
64A	A/C SPARE
64B	A/C SPARE
65	FOOT DAMPER MOTOR
65A	FOOT DAMPER MOTOR
65D	DRIVER'S REC. DAMPER
65E	DRIVER'S REC. DAMPER L.H.
65F	DRIVER'S REC. DAMPER L.H.
66	A/C PASSENGER – ON/OFF
67A	A/C & HEAT SYSTEM
68	DASH & DEFROST DAMPER MOT
68A	DASH & DEFROST DAMPER MOT
69	DAMPER MIX LIMIT SWITCH
70	HAT RACK & NIGHT LTS FEEDING
72	SUN VISOR - FEED
72A	SUN VISOR RH
72B	SUN VISOR RH
72C	SUN VISOR LH
72D	SUN VISOR LH
74	R.H. READING LAMP FEEDING
74A	R.H. HOTESS CHIME FEEDING
74B	WCL R.H. READING LAMP FEED.
74D	READING LAMP SWITCH
74J	READING LAMP INDICATOR SW.
75	L.H. READING LAMP FEEDING
75A	L.H. HOTESS CHIME FEEDING
76	FUEL TANK GAUGE
76C	LOW FUEL T.T.LT
76M	FUEL PRIME PUMP
76P	FUEL PRIME PUMP FEEDING
77B	A/C SYS. – LIQ. SOL. VALVE
77C	A/C & HEAT SYS.-COMPRESSOR
77H	A/C SYS.-LIQ. SOL. VALVE
81	EXTERIOR LTS-STOP SW
82	EXTERIOR LTS-STOP SIGNAL
82A	EXTERIOR LTS-STOP SIGNAL
82B	EXTERIOR LTS-STOP LTS
82C	EXTERIOR LTS-STOP LTS
82L	EXT. LTS-STOP LTS & CYCLOP
82R	EXTERIOR LTS-STOP LTS

CIRCUIT NUMBER C0DE

N0.	DESCRIPTI0N
83	ENG. CTR-MAST. KEY SW ACC.
83A	24V&12V CUT RELAY COIL
83B	24V&12V CUT RELAY COIL
84	ENG. CTR-MAST KEY SW START
84A	ENG. CTR-MAST KEY SW START
84J	ENG. CTR-MAST KEY SW START
85	24V IGNITION SIGNAL
85A	24V IGN DASH INSTRUMENT.
85C	24V IGNITION - FEED
85F	RAD. FAN CONTROL W/RETARD
85W	OUT SPEED INTERLOCK–24V IGN.
85X	ABS-24V IGN
85Y	ABS-WARNING LT
86	ENG. CTR-STARTER SOL.
86A	ENG. CTR-STARTER RELAY COIL
86F	TELL TALE STARTER ON
86T	TELL TALE STARTER ON
87B	ENGINE CTR-24V IGNITION
88	ENGINE CTR-RR START SIGNAL
89	ENGINE CTR-RR START SIGNAL
90	DASH MAGNETIC SWITCH
90B	ENG. CTR-MAST KEY SW FEED
91	PARKING BRAKE SW SIGNAL
91A	DDEC -FAST IDLE SIGNAL
91B	D.R.L. CANCEL RELAY
91C	PARKING BRAKE – T.T.LT
91J	FAST IDLE – JUMPER SW.
91W	WCL PARKING BRAKE SIGNAL
92	BATT. EQUAL.-CHECK BALANCE
93	BATT. EQUALIZ.-CHECK LO/HI
95A	ENG. BRAKE & RETARDER SYS.
95B	ENG. BRAKE & RETARDER SYS.
100	INTERIOR LTS RELAY COIL
100	INDIRECT LTS FEEDING
100A	INDIRECT LTS RELAY COIL
100B	INDIRECT LTS FEEDING
100C	INDIRECT LTS FEEDING
101	24 VOLTS POWER STARTER
101	WORLD TR..– LO SIGN SOL.LO
102	24 VOLTS A/C DISTRIBUTION
102	WORLD TRANSM.–SOL. SUPPLY
102A	BOSCH ALTERNATOR FEEDING
103	WORLD TRANSM.- B.SOL.LO
103	LOW BUOY SYSTEM
104	WORLD TR. –G SOL.
105W	WORLD TR-SOL.–RET.OIL TT.LT
107	WORLD TR. - SOL. SUPPLY

N0.	DESCRIPTI0N
110	WORLD TR.-F SOL. LO
112	WORLD TR.-SPARE OUTPUT (+)
113W	WORLD TR.-REVERSE WARNING
113Z	ZF TRANSM.- REVERSE
114	INTERIOR LT-DASH LT RHEOS.
114A	INTERIOR LT-DASH LT RHEOS.
114B	INT. LT-DASH LT RHEOST.FEED
115	DDEC -COOLANT LEVEL
115W	TRANSM.-DO NOT SHIFT SIGN
115W	ZF -CHECK TRANSM. TTLT
116	WORLD TR.-SOL. SUPPLY
116B	A/C & HEAT SYSTEM-DR'S HTR
116C	A/C SYS.–TRIG. DEFROST
119	WORLD TRANSM-ENGINE BRAKE
120	WORLD TRANSM-A SOL.
121	WORLD TRANSM-SOL.SUPPLY
123	WORLD TR.-NEUTRAL START
123A	ALARM & SIGNAL-FIRE DETECT.
123B	ALARM & SIGNAL-FIRE DETECT.
124	WORLD TR.-SENSOR POWER
124A	WORLD TRANSM-SENSOR PWR
125	LAVATORY FAN
125	WORLD TR-RETARDER INDICAT.
125W	WORLD TR-RETARDER INDICAT.
126	24 V IGN. SPEED SWITCH
126A	KNEELING SYSTEM
126AA	KNEELING SYSTEM
126B	HI-BUOY SIGNAL
126C	KNEELING SYSTEM
126D	KNEELING SYSTEM
126F	KNEELING SYSTEM
126G	KNEELING SYSTEM
126H	SPEED SIGN 5NC – 24V
126K	KNEELING SYSTEM
126L	KNEELING SYSTEM
126P	KNEELING SYSTEM
126R	KNEELING SYSTEM
126S	KNEELING SYSTEM
126T	KNEELING SYSTEM
126W	KNEELING SYSTEM
126W	WORLD TRANSM-NOT USED
127	WORLD TRANSM. – H SOL.
127	24HOT WIRE PREHEAT
127A	PRE-HEAT WATER HEATER
127B	PRE-HEAT WATER HEATER
127S	PRE-HEAT WATER HEATER
128	WORLD TRANSM-B SOL.

N0.	DESCRIPTI0N
128A	PRE-HEAT WATER HEATER
128B	PRE-HEAT WATER HEATER
129	WORLD TRANSM-E SOL.
129	PRE-HEAT WATER HEATER
129B	PRE-HEAT WATER HEATER
130	WORLD TRANSM-SOL. SUPPLY
130	EVAP. FAN MAIN CABLE
130A	EVAP. FAN MAIN CABLE
131	WORLD TRANSM-D SOL.
132	WORLD TRANSM-ENGINE BRAKE
133	GALLEY HEATING CONTAINER
133A	GALLEY HEATING CONTAINER
133B	GALLEY HEATING CONTAINER
133C	GALLEY HEATING CONTAINER
134	GALLEY HEATING CONTAINER
134A	GALLEY HEATING CONTAINER
135	GALLEY HEATING CONTAINER
135A	WORLD TR.-RES MODULE RET.
135B	A/C & HEAT SYS.-AIR SENSOR
135C	A/C & HEAT SYS.-AIR SENSOR
136	MICRO-WAVE OVEN SWITCH
136A	GALLEY LAMP
136A	WORLD TRANSM-12V BATTERY
136A1	WORLD TRANSM-12V BATTERY
136A2	WORLD TRANSM-12V BATTERY
136AA	WORLD TRANSM-SHIFTER PWR
136V	WORLD TRANSM-12V BATTERY
136W	WORLD TRANSM-12V BATTERY
136X	WORLD TRANSM-12V BATTERY
137	WORLD TRANSM-RETARDER
137	RR VIEW MIRROR
137A	RR VIEW MIRROR
137B	RR VIEW MIRROR
137C	RR VIEW MIRROR
137D	RR VIEW MIRROR
137E	RR VIEW MIRROR
137F	RR VIEW MIRROR
137H	RR VIEW MIRROR
137J	RR VIEW MIRROR
137K	RR VIEW MIRROR
137L	RR VIEW MIRROR
137M	RR VIEW MIRROR FEED
137R	WORLD TRANSM-RETARDER
137T	MIRROR HEAT SW-JUMPER
138	WORLD TR.-RETARDER TEMP
138	ABS SYSTEM-SENSOR
138A	ABS SYSTEM-SENSOR
139	ABS SYSTEM-VALVE
139	WORLD TR.-OUTPUT SPEED HI
140	WORLD TR.-TURBINE SPEED LO

N0.	DESCRIPTI0N
140	ABS SYSTEM-VALVE
141	ABS SYSTEM-VALVE
141	WORLD TR.-ENGINE SPEED HI
142	ABS SYSTEM-VALVE
143	ABS SYSTEM-SENSOR
143A	ABS SYSTEM-SENSOR
143A	WORLD TRANS-BATERY GRD
143W	WORLD TRANSM-BATTERY GRD
143X	WORLD TRANSM-BATTERY GRD
143Y	WORLD TRANSM.BATT.GRD
143W	FROM GROUND STUD
144	ABS SYSTEM-SENSOR
144A	ABS SYSTEM-SENSOR
145	ABS SYSTEM
146	ABS SYSTEM
146A	WORLD TRANSM-12V IGNITION
146AA	WORLD TRANSM-DIAGN.CONN.
147	WORLD TRANSM-OIL TEMP
147	ABS SYSTEM-VALVE
147A	ETHER COLD START
147C	ETHER COLD START
148	ABS SYSTEM-VALVE
148	WORLD TR.-OUTPUT SPEED LO
149	WORLD TR.-TURBINE SPEED HI
149	ABS SYSTEM-SENSOR
149A	ABS SYSTEM
150	WORLD TR.-ENGINE SPEED LO
150	DDEC -ECM BATTERY GRD
150A	DDEC -ECM BATTERY GRD
151	DDEC -ECM BATTERY GRD
151	ATC VALVE
152	ATC VALVE
153	ELECTRICAL DRIVER'S SEAT
154	WORLD TRANSM-ABS INPUT (-)
156A	ABS SYSTEM-FEED
157B	ABS SYSTEM
159	WORLD TRANSM-DIAGNOSTIC
160	ALARM & SIGN.-TAG PRESS SW
161B	WORLD TRANSM-SIGNALGRD
162	WORLD TRANSM-PRESS. SW C3
163	WORLD TR.-RETARDER ENABLE
164	WORLD TR.-RET. ACTUAT. SIGN
165	WORLD TR.-OIL LEVEL SIGNAL
166	WORLD TRANSM. OUTPUT 7
167	W. TR.-OUT SPEED INTERLOCK
167Z	ZMTEC MODULE
169	WORLD TRANSM-PRE-SELECT #1
170	WORLD TRANSM-SHIFTER
170C	LUGGAGE DOOR LOCK-T.T.LT

CIRCUIT NUMBER C0DE

N0.	DESCRIPTI0N
170D	LUGGAGE DOOR LOCK-FEED
170E	LUG. DOOR LOCK-UNLOCK SIGN
170F	LUGGAGE DOOR LOCK-FEED
170G	LUGGAGE DOOR LOCK-FEED
170K	LUGGAGE DOOR-LOCK SIGN
170L	LUGG DOOR LOCK-SIGN T.T.LT
170N	LUGG DOOR LOCK-SIGN T.T.LT
170R	LUGG DOOR LOCK-SIGN. T.T.LT.
170S	LUGG DOOR LOCK-SIGN T.T.LT
170T	LUGG DOOR LOCK-SIGN T.T.LT
170V	LUGG DOOR LOCK-SIGN T.T.LT
170W	LUGGAGE DOOR LOCK-FEED
170X	LUGG DOOR LOCK-SIGN T.T.LT
170Y	LUGGAGE DOOR LOCK-FEED
170Z	LUGGAGE DOOR LOCK
171	WORLD TRANSM-SHIFTER
172	WORLD TRANSM-SHIFTER
173	WORLD TRANSM-SHIFTER
174	WORLD TRANSM-SHIFTER
175A	WORLD TRANSM-SHIFTER
176	WORLD TRANSM-SHIFTER
180	OUTSIDE TEMP. DISPLAY
180A	OUTSIDE TEMP. DISPLAY
180A	WORLD TRANSM-SHIFTER
180B	OUTSIDE TEMP. DISPLAY
180C	OUTSIDE TEMP. DISPLAY
181	FROZEN POINT T.T.LT
181A	TEMP. CTR'L INSIDE SENSOR
181B	TEMP. CTR'L INSIDE SENSOR
181C	THERMOMET. OUTSIDE SENSOR
181D	THERMOMET. OUTSIDE SENSOR
195	WORLD TRANSM-TRANS ID
197	FUEL WATER FILTER
197A	FUEL WATER FILTER
201	WORLD TRANSM-SPARE
202	WORLD TRANSM-SPARE
203	WORLD TRANSM-SPARE
204	WORLD TRANSM-SPARE
214	WORLD TR.-BACK-UP SIGNAL
231	WORLD TR.-NEUTRAL SIGN GRD
231F	WORLD TR.-NEUTRAL SIGN GRD
231W	W.TR.-NEUTRAL SIGN GRD WCL
231Z	ZF NEUTRAL SIGNAL GRD
240	DDEC -ECM 12V FEEDING
241	DDEC -ECM 12V FEEDING

N0.	DESCRIPTI0N
253	24V SIGNAL GALLEY INVERTER
254	GALLEY REFRIGERATOR
254A	GALLEY REFRIGERATOR
254F	GALLEY REFRIGERATOR
255	GALLEY COFFEEMAKER
255A	GALLEY COFFEEMAKER
255B	GALLEY COFFEEMAKER
260	WINDOW AJAR-T.T.LT
290	FAN CLUTCH RADIATOR-FEED
290A	FAN CLUTCH RADIATOR-FEED
291	FAN CLUTCH RADIATOR SPD 1
292	FAN CLUTCH RADIATOR SPD 2
292J	FAN OVERRIDE LTS SWITCH
300	WCL POWER SYSTEM & ACCESS.
300A	WCL POWER SYSTEM SW.
301J	WCL POWER SW. JUMPER LED
301	WCL SIGNAL POWER SW.
302	WCL DOOR AJAR TTLT & ALARM
304	WCL DOOR TOP LT.
305	WCL PARKING BRAKE SOL. VALVE
305A	WCL DOOR OPEN SIGNAL
305B	WCL DOOR TOP LT.
306	WCL CONTROL SYSTEM
307	WCL CONTROL SYSTEM
308	WCL CONTROL SYSTEM
309	WCL CONTROL SYSTEM
417	DDEC-LIMIT SPEED GOVERNOR
419	DDEC -CHEK ENGINE LIGHT
439	DDEC-12V IGNITION
451	DDEC-A/C FAN CLUTCH
499	DDEC-OUTPUT PWR SHUTDOWN
505	DDEC-TACHOMETER DRIVE
509	DDEC-STOP ENGINE LIGHT
510	DDEC-FAST IDLE SIGNAL
524	DDEC-ENGINE BRAKEDISABLE
524B	ZF SIGNAL–AUX.SENS.THROTTLE
525	DDEC-FAST IDLE SIGNAL
528	DDEC-STOP ENG. OVERRIDE
531	DDEC-CRUISE CLUTCH CUT OUT
540	DDEC-CRUISE ENABLE T.T.LT
541	DDEC-CRUISE SET SW
542	INPUT PARK BRAKE INTERLOCK
543	DDEC-CRUISE BRAKE PEDAL
544	DDEC-CRUISE ON/OFF SW
545	DDEC-CRUISE RESUME SW
555	DDEC-FAN CLUTCH SPEED#1
556	DDEC-VEHICULE SPEED (+)
557	DDEC-VEHICULE SPEED (-)

N0.	DESCRIPTI0N
563	DDEC-FAN CLUTCH SPEED#2
564	DDEC-DIGTAL OUTPUT
565	DDEC-ENGINE BRAKE ACTIVE
565Z	DECELERATION LTS
583	DDEC-ENGINE BRAKE 4 CYL.
700	J1587(+)
701	J1587(-)
705	ZF SIGNALS
706	ZF SIGNALS
707	ZF SIGNALS
717	ZF SIGNALS
718	ZF SIGNALS
719	ZF SIGNALS
720	ZF SIGNALS
740	EASY START VALVE
761	ZF SIGNALS
900	DDEC-DATA LINK (+)
901	DDEC-DATA LINK (-)
908	DDEC-HYDRAU. PWM#1 OUTPUT
916	DDEC-SENSOR SUPPLY (5VDC)
925	J1939(+)
926	J1939(-)
927	J1939(SHIELD)
952	DDEC-SENSOR RETURN
953	DDEC-BATTERY GRD
979	DDEC-ENGINE BRAKE 2 CYL.
2123	FLASHER SIGNAL LTS

N0.	DESCRIPTI0N

CIRCUIT NUMBER C0DE

N0.	DESCRIPTI0N
A1	RADIO SYSTEM
A2	RADIO SYSTEM
A3	AUDIO AMPLI
A8	VIDEO SYSTEM
A9	RADIO SYSTEM
A10	AUDIO AMPLI
A11	AUDIO AMPLI
A12	AUDIO AMPLI
A13	AUDIO AMPLI
A15	AUDIO AMPLI
A16	VIDEO SYSTEM
B1	MICROPHONE
B2	MICROPHONE
B3	MICROPHONE
B4	MICROPHONE
B5	MICROPHONE
B6	MICROPHONE
B7	MICROPHONE
B8	MICROPHONE
B10	MICROPHONE
B11	MICROPHONE
B12	MICROPHONE
B1A	FLUORESCENT BALLAST
B1B	FLUORESCENT BALLAST
B2A	FLUORESCENT BALLAST
B2B	FLUORESCENT BALLAST
B3A	FLUORESCENT BALLAST
B3B	FLUORESCENT BALLAST
B4A	FLUORESCENT BALLAST
B4B	FLUORESCENT BALLAST
B5A	FLUORESCENT BALLAST
B5B	FLUORESCENT BALLAST
B6A	FLUORESCENT BALLAST
B6B	FLUORESCENT BALLAST
B7A	FLUORESCENT BALLAST
B7B	FLUORESCENT BALLAST
B14	RADIO SYSTEM
B15	RADIO SYSTEM
C2	RADIO SYSTEM
C3	CONTROL HEAD ANTENNA
C5	VIDEO SYSTEM
C6	CONTROL HEAD DIMMER
C7	RADIO SYSTEM
C8	AUDIO AMPLI
C9	VIDEO SYSTEM
C10	VIDEO SYSTEM
C11	VIDEO SYSTEM
C12	VIDEO SYSTEM
C13	VIDEO SYSTEM
C14	VIDEO SYSTEM

N0.	DESCRIPTI0N
C15	AUDIO AMPLI
D1	PASSENGER SPEAKER
D2	PASSENGER SPEAKER
D3	PASSENGER SPEAKER
D4	PASSENGER SPEAKER
D5	PASSENGER SPEAKER
D6	PASSENGER SPEAKER
D7	PASSENGER SPEAKER
D8	PASSENGER SPEAKER
DR1	DRIVER'S SPEAKER
DR2	DRIVER'S SPEAKER
DR3	DRIVER'S SPEAKER
DR4	DRIVER'S SPEAKER
G1	PASSENGER SPEAKER
G2	PASSENGER SPEAKER
G3	PASSENGER SPEAKER
G4	PASSENGER SPEAKER
G5	PASSENGER SPEAKER
G6	PASSENGER SPEAKER
G7	PASSENGER SPEAKER
G8	PASSENGER SPEAKER
IPJ1	CLUSTER – BULB TEST POS
IPJ2	CLUSTER – BULB TEST NEG.
IPJ5	CLUSTER – FUEL GAUGE
IPJ6	CLUSTER – BULB TEST POS.
IPJ7	CLUSTER – BULB TEST NEG.
IPJ8	CLUSTER – MASTER WARNING
L8	WATER TANK HEATER
L9	WATER TANK HEATER
LX5	CLUSTER – COMPUTER MODE
LX6	CLUSTER – COMPUTER DOWN
LX7	CLUSTER – COMPUTER SET
LX16	CLUSTER – COMPUTER UP
LX21	CLUSTER – COMPUTER COM.
R1A	FLUORESCENT BALLAST
R1B	FLUORESCENT BALLAST
RT	T.T.L.T. MODULE – TEST SW.
SPK1	PASSENGER SPEAKER
SPK2	PASSENGER SPEAKER
SPK3	PASSENGER SPEAKER
SPK4	PASSENGER SPEAKER
SP1	SPARE WIRE
SP2	SPARE WIRE
SP3	SPARE WIRE
SP4	SPARE WIRE
SP5	SPARE WIRE
SP6	SPARE WIRE
SP7	SPARE WIRE
SP8	SPARE WIRE
SP9	SPARE WIRE

N0.	DESCRIPTI0N
SP10	SPARE WIRE
SP11	SPARE WIRE
SP12	SPARE WIRE
SP13	SPARE WIRE
SP14	SPARE WIRE
SP15	SPARE WIRE
SP16	SPARE WIRE
SP17	SPARE WIRE
SP18	SPARE WIRE
SP19	SPARE WIRE
SP20	SPARE WIRE
SP21	SPARE WIRE
SP23	SPARE WIRE
SP24	SPARE WIRE
SP25	SPARE WIRE
SP26	SPARE WIRE
SP27	SPARE WIRE
SP28	SPARE WIRE
SP30	SPARE WIRE
SP33	SPARE WIRE
SP34	SPARE WIRE
SP35	SPARE WIRE
SP36	SPARE WIRE
SP37	SPARE WIRE
SP38	SPARE WIRE
SP40	SPARE WIRE
SP41	SPARE WIRE
SP42	SPARE WIRE
SP43	SPARE WIRE
SP44	SPARE WIRE
SP45	SPARE WIRE
SP48	SPARE WIRE
SP50	SPARE WIRE
SP51	SPARE WIRE
SP52	SPARE WIRE
SP53	SPARE WIRE
SP54	SPARE WIRE
SP55	SPARE WIRE
SP56	SPARE WIRE
SP57	SPARE WIRE
SP60	SPARE WIRE
SP61	SPARE WIRE
SP62	SPARE WIRE
SP63	SPARE WIRE
SP64	SPARE WIRE
SP65	SPARE WIRE
SP66	SPARE WIRE
SP67	SPARE WIRE
SP69	SPARE WIRE
SP70	SPARE WIRE

N0.	DESCRIPTI0N
SP71	SPARE WIRE
SP72	SPARE WIRE
SP74	SPARE WIRE
SP75	SPARE WIRE
SP76	SPARE WIRE
SP77	SPARE WIRE
SP78	SPARE WIRE
SP80	SPARE WIRE
SP81	SPARE WIRE
SP82	SPARE WIRE
SP83	SPARE WIRE
SP84	SPARE WIRE
SP85	SPARE WIRE
SPZ1	SPARE WIRE-ZF TRANSM.
SPZ2	SPARE WIRE-ZF TRANSM.
SPZ3	SPARE WIRE-ZF TRANSM.
SPZ4	SPARE WIRE-ZF TRANSM.
SPZ5	SPARE WIRE-ZF TRANSM.
SPZ6	SPARE WIRE-ZF TRANSM.
TW1	TWISTED SPARE
TW2	TWISTED SPARE
W1	STEERING BOX CONVERTER
W2	STEERING BOX CONVERTER
Y1A	FLUORESCENT BALLAST
Y1B	FLUORESCENT BALLAST
Y2A	FLUORESCENT BALLAST
Y2B	FLUORESCENT BALLAST
Y3A	FLUORESCENT BALLAST
Y3B	FLUORESCENT BALLAST
Y4A	FLUORESCENT BALLAST
Y4B	FLUORESCENT BALLAST
Y5A	FLUORESCENT BALLAST
Y5B	FLUORESCENT BALLAST
Y6A	FLUORESCENT BALLAST
Y6B	FLUORESCENT BALLAST
Y7A	FLUORESCENT BALLAST
Y7B	FLUORESCENT BALLAST
0	BATTERY – MAIN GROUND
0	EVAP. COMPT. GROUND
0	RJB – INSIDE GRD
0	WCL MODULE
0	INVERTER CUT OFF RELAY
0A	LAVATORY ACCESSORIES
0A	EVAP. FAN GROUND
0A	FR. ROOF ACC. GRD
0B	BOOSTER BLOCK GROUND
0B	A/C – CONDENSER GRD
0B	24V&12V CUT OUT REL.COIL
0BE	OV BATTERY MONITOR
0C	R.J.B. - GRB

CIRCUIT NUMBER C0DE

N0.	DESCRIPTI0N
0C	MOTOR STARTER GROUND
0C	F.R. SERV. CPT- ACC.
0C1	ENTRACE DOOR SEDAN
0C2	STEERING CONTROL GROUND
0C3	SOUND SYSTEM RELAY
0C4	F.J.B. GRD
0CJ	CRUISE SW. JUMPER
0D	FLUORESCENT GRD
0D	COND FAN GRD
0E	BATT. COMPT. LTS GROUND
0E	READING LIGHTS GROUND
0F	FLUORESCENT GRD
0F	PRO-DRIVER GROUND
0G	READING LIGHTS GROUND
0H	ENG. CPT. – ACC. GRD
0IN	INTERCOM SYSTEM
0J	PARCEL RACK A/C UNIT
0K	PARCEL RACK A/C UNIT
0L	ENG.CPT –CLEAR.LTS RR ROOF
0L	R.J.B. - GRD
0L	FR – SIDE MARK. & FLASH GRD
0L1	ENG.CPT–SIDE MARK. & FL. GRD
0L2	HEAD LTS GROUND
0L3	FR.SERV.DR. & ENT.DOOR GRD
0L4	FOG LTS RESISTOR GRD
0L5	LH CONSOL – ACC. GRD
0L5	W.C.L.DOOR
0L6	MARKER&FLASH. GROUND
0L7	AISLE LIGHTS GROUND
0L8	DOCKING LTS
0LV	WINDSHIELD WASHER LEVEL
0M	WIPER 2 MIRROR MOTOR
0M3	DEFROST GRD
0M4	HORN & DR'S WINDOW LIFTER
0M5	SUN VISOR MOTOR
0M6	UPPER FAN DEFROST
0M7	DR'S WIND.LIFT. & RH MIR. SW
0M7A	LH MIRROR SW.
0P	ENG.CDT – PRE-HEATER
0P1	A/C COMPRESSOR GRD
0R	SOUND SYSTEM RELAY GROUND
0SA	BOSCH ALTERNATOR GROUND
0SA	PARCEL RACK LTS SWITCH
0SB	PARCEL RACK LTS SWITCH
0SC	PARCEL RACK LTS SWITCH
0SE	PARCEL RACK LTS SWITCH
0SF	PARCEL RACK LTS SWITCH
0SG	PARCEL RACK LTS SWITCH

N0.	DESCRIPTI0N
0SH	PARCEL RACK LTS SWITCH
0SJ	PARCEL RACK LTS SWITCH
0SS	SOUND SYSTEM GROUND
00SS	SOUND SYSTEM GROUND
0S2	RADIO GROUND
0S3	VIDEO GROUND
0T	LAVATORY FAN & PUMP
0T	SPEED SW. CONNECTOR
0T1	DASH ACC. GROUND
0T2	CLUSTER ACC. GROUND
0T2	WINDOW AWNING
0T3	ALTERNATOR MODULE
0T4	12V OUTLET – CTR MODULE
0T5	FS.HVAC DASH MODULE. GND
0T6	FS-DDR GROUND
0VA	BATTERY EQUALIZER GROUND
0W	FJB – TRANSM. RLY GRD
0W	SHIFT SELECTOR GROUND
0W	WCL MODULE
0WA	WCL DOOR AJAR
0WC	WCL BATTERY CPT. ACCES.
0WL	WCL SIGNAL DOOR AJAR ALARM
0Y1	ABS SYSTEM-GRD
0Y2	ABS SYSTEM-GRD
0Y3	ABS SYSTEM-GRD
0Y4	ABS SYSTEM-GRD
0Y5	ABS SYSTEM-GRD
0Y6	ABS SYSTEM-GRD
0Z1	ZF TRANSM. GRD
0Z2	ZF TRANSM. GRD
00A	ELECTRONIC TERMINAL GROUND
00F	FRONT ELECTRONIC GROUND
2B	A/C & HEAT SYSTEM
2D	A/C & HEAT SYSTEM
2DD	A/C & HEAT SYSTEM
2E	A/C & HEAT SYSTEM
2EE	A/C & HEAT SYSTEM
2F	A/C & HEAT SYS.-EVAP. SPEED
2H	A/C & HEAT SYS–LO-PRESS SW.
2L	A/C & HEAT SYS–HI-PRESS SW.
4A	HOTESS CHIME MAIN SWITCH
4C	HOTESS CHIME P. RACK SW.
5	AISLE LTS FEEDING
5N	EMERGENCY LTS
5N0	SPEED SIGNAL HIGHER 5MPH
5NC	SPEED SIGNAL LOWER 5MPH
6	AISLE LTS
7B	ENTRANCE DOOR FEED.-24V HW

N0.	DESCRIPTI0N
9	INTERIOR LTS-ENGINE CPT
9F	INTERIOR LTS – FR-SERV. CPT
10	INTERIOR LTS-LUGGAGE CPT
10	INTERIOR LTS-FR SERV. CPT
10A	INTERIOR LTS-LUGGAGE CPT
10A	AUX. COMPRESSOR CLUTCH
10B	INTERIOR LTS-LUGGAGE CPT
10C	INTERIOR LTS-LUGGAGE CPT
10E	INTERIOR LTS-BATTERY CPT
10H	AUX. COMPRESSOR CLUTCH
10L	AUX. COMPRESSOR CLUTCH
10X	AUX. COMPRESSOR CLUTCH
11	DESTINATION SIGN
11A	DESTINATION SIGN
11B	DESTINATION SIGN
11C	DESTINATION SIGN
11D	DESTINATION SIGN
11E	DESTINATION SIGN
11K	DESTINATION SIGN
11J	DESTINATION SIGN
11P	DESTINATION SIGN
12	12V ELECTRONIC TERMINAL
12A	FR JCT PANEL 12V DISC SW
12A	BATT. JCT PANEL 12V DISC SW
12B	FR JCT PANEL 12V DISC SW
12BE	12V BATTERY MONITOR
12C	FR JCT PANEL 12V DISC SW
12C	RR JCT BOX 12V DISC SW
12D	BATT. JCT PANEL 12V HOT WIRE
12D	FR JCT PANEL 12V HOT WIRE
12D	RR JCT PANEL 12V HOT WIRE
12DD	FR JCT PANEL 12V HOT WIRE
12DDR	FR JCT BOX 12V HOT DDR CONN
12DT	T.T. LT MODULE
12DZ	ZF TRANSM. 12V HOT WIRE
12E	FR JCT PANEL 12V DISC SW
12F	RR JCT PANEL 12V DISC SW
12F1	FR JCT PANEL 12V DISC SW
12F2	FR JCT PANEL 12V DISC SW
12FL	RR JCT PANEL 12V DISC SW
12G	FR JCT PANEL 12V DISC SW
12H	12V IGN. DASH ACCESS.
12I	RR JCT BOX 12V IGNITION
12I	FR JCT PANEL 12V IGNITION
12IA	FR JCT PANEL 12V IGNITION
12IA	RR JCT PANEL 12V IGNITION
12IB	FR JCT PANEL 12V IGNITION
12IB	STEERING BOX ECU FEEDING
12IE	ABS-FR JCT PANEL 12V IGN.

N0.	DESCRIPTI0N
12IZ	ZF TRANSM. IGNITION
12IN	12 VOLTS DISC.SW. INTERCOM
12J	FR JCT PANEL 12V DISC.SW.
12K	FR JCT PANEL 12V DISC.SW.
12L	CORNERING LTS FEEDING
12LX	CLUSTER 12V HOT WIRE
12M	ABS-FR JCT PNL 12V DISC.SW
12P	12V BATTERY JCT BLOCK
12R	12V MEMORY RADIO
12P	12V POWER OUTLET
12SB	12V SOUND SYSTEM FEEDING
12SS	12V SOUND SYSTEM FEEDING
12S	12V RADIO FEEDING
12S1	12V RADIO FEEDING
12S1A	12V DVD KARAOKE FEEDING
12S2	12V RADIO FEEDING
12S2A	12V DVD KARAOKE FEEDING
12T	RR JCT BOX 12V DISC SW
12VA	12V BATTERY EQUALIZER
12VB	FR JCT PANEL 12V DISC SW
12VD	12V HOT WIRE DISTRIBUTION
12VE	FR JCT PANEL 12V DISC SW
12VF	12 VOLTS FRONT DISTRIBUTIUON
12VG	RR JCT PANEL 12V DISC SW
12VI	12V IGNITION DISTRIBUTION
12VO	12V BATTERY EQUALIZER
12VR	12V REAR DISTRIBUTION
12W	12V HOT WIRE DDEC FEEDING
12WA	ENTRANCE DOOR SYSTEM
12WR	WCL DOOR TOP LT
14	LAVATORY PUMP
14A	LAVATORY PUMP- P.BUTTON
14P	LAVATORY PUMP
15	WIPER & WASHER FEEDING
16	SPEEDOMETER (+)
16T	SPEED SW SIGNAL IN (+)
17	EXTERIOR LTS-FLASHER UNIT
17A	EXTERIOR LTS-FLASHER UNIT
17C	JUMPER LTS SW. - HAZARD
18	UPPER FAN DEFROST
19	UPPER FAN DEFROST
20	SPEEDOMETER SIGNAL (-)
21	LEFT DIRECTIONNAL LTS
21A	LEFT DIRECTIONNAL LTS SIGN.
21B	HAZARD SWITCH SIGNAL
21BB	LEFT DIRECTIONNAL LTS FEED.
21H	EXTERIOR LTS-HAZARD SIGNAL
21M	AUX. LTS – DIRECTIONAL LH

CIRCUIT NUMBER C0DE

N0.	DESCRIPTI0N
23	RIGHT DIRECTIONNAL LTS
23A	RIGHT DIRECTIONNAL LTS SIGN.
23BB	RIGHT DIRECTIONNAL LTS FEED.
23H	EXTERIOR LTS-HAZARD SIGNAL
23K	RIGHT DIRECT. LTS W/KNELLING
23M	AUX LTS – DIRECTIONAL RH
24	24 VOLTS BATTERY DIST.
24	24 V. DISC. FRONT DIST.
24A	BATT. JCT PANEL 24V DISC SW
24A	24V BOOSTER BLOCK
24A	FR JCT PANEL 24V DISC. SW
24A	RR JCT PANEL 24V DISC. SW
24BE	BATTERY MONITOR
24C	FR JCT PANEL 24V DISC SW
24D	24 V. HOT WIRE FEEDING
24D	FR JCT BOX 24V HOT WIRE
24DD	FR JCT BOX 24V HOT WIRE
24DS	WIRELSS MICRO FEEDING
24DZ	ZF TRANSM. 24V HOT WIRE
24E	24 VOLTS POWER DISTRIBUTION
24E	RR JCT PANEL 24V DISC SW
24F	RR JCT PANEL 24V DISC SW
24G	FR JCT PANEL 24V DISC SW
24H	RR JCT PANEL 24V DISC SW
24I	FR JCT PANEL 24V IGNITION
24IA	RR JCT PANEL 24V IGNITION
24IA	FR JCT PANEL 24V IGNITION
24IB	FR JCT PANEL 24V IGNITION
24IF	FR JCT PANEL 24V IGNITION
24IZ	ZF TRANSM. IGNITION
24K	RR JCT PANEL 24V DISC SW
24L	RR JCT PANEL 24V DISC SW
24M	RR JCT PANEL 24V DISC SW
24P	FR JCT PANEL 24V DISC SW
24P2	RR BENCH- INVERTER
24PV	RR BENCH- INVERTER
24R	24V STARTER RELAY
24R	SCENIC VIEW SIGNAL ON
24SB	24V SOUND SYSTEM FEEDING
24SS	24V SOUND SYSTEM FEEDING
24S1	AMPLIFIER FEEDING
24S2	AMPLIFIER FEEDING
24S3	VIDEO FEEDING
24S4	VIDEO FEEDING
24T	RR JCT PANEL 24V DISC SW
24VA	24 VOLTS BATTERY EQUALIZER
24VD	24V HOT WIRE FEED

N0.	DESCRIPTI0N
24VF	24 VOLTS FRONT DISTRIBUTION
24VI	24 VOLTS IGNITION REAR DIST.
24VR	24 VOLTS REAR DISTRIBUTION
24Y	24 VOLTS POWER GALLEY
24WC	WCL PUMP FEEDING
24WL	WCL PUMP FEEDING
24WR	WCL POWER ACCES.
25	EITHER ALTERNAT. RUN SIGNAL
25A	TT.LT. ALTERNATOR #1
25A1	BOSCH ALTERNATOR SIGNAL D+
25A2	BOSCH ALTERNATOR SIGNAL D+
25B	EXT. LTS-DAYTIME RUN LTS
25D	BOTH ALTERNATOR RUN SIGNAL
25K	T.T LT. ALTERNATOR #2
26	DR'S & ENT. WINDOW LIFTER
26A	CIGAR LIGHT. & POW.OUTLET LH
26B	DRIVER'S WINDOW LIFTER
26C	DRIVER'S WINDOW LIFTER
27	LAVATORY ALARM
28H	T.T.LT MODULE – HI A/C PRES.
28T	T.T.LT MODULE – LO A/C PRES.
29	A/C & HEAT SYS.-DR'S HTR
29H	HVAC DASH MODILE
30A	GALLEY SWITCH SIGNAL
30J	GALLEY SWITCH LED
31B	WIPER & WASHER SYSTEM
32	EXTERIOR LTS-BACK-UP
32B	EXTERIOR LTS-BACK-UP
35	ENTRANCE STEP LIGHTS
36	ENGINE BRAKE SYSTEM
36A	ENGINE BRAKE SYSTEM & RET.
37	LAVATORY LTS FEEDING
38	FLUORESCENT RELAY FEEDING
38A	R.H FLUORESCENT
38B	L.H. FLUORESCENT
38C	FLUORESCENT FEEDING
39	INTERIOR LTS-DRIVER'S LTS
39D	INTERIOR LTS – DRIVER' LTS
41	A/C SYS.-COND FAN MOTOR
41A	A/C SYS.-COND FAN MOTOR
41B	A/C SYS.-COND FAN MOTOR
42	A/C SYS.-COND FAN MOTOR
42A	A/C SYS.-COND FAN MOTOR
43	PARCEL RACK A/C
43A	PARCEL RACK A/C
43B	PARCEL RACK A/C

N0.	DESCRIPTI0N
43C	PARCEL RACK A/C
43D	PARCEL RACK A/C
43E	PARCEL RACK A/C
43F	PARCEL RACK A/C
43G	PARCEL RACK A/C
43M	PARCEL RACK A/C
43X	PARCEL RACK A/C
44	EXTERIOR LTS-FOG
44A	EXTERIOR LTS-FOG
44B	EXTERIOR LTS-FOG
44C	FOG,LTS & HVAC FEEDING
44D	EXTERIOR LTS - FOG
44E	EXTERNAL LTS - FOG
45A	A/C & HEAT SYSTEM FULL AIR
45B	A/C & HEAT SYS.-WATER PUMP
45C	A/C & HEAT SYS.-WATER VALV
45D	A/C & HEAT SYS.-WATER VALV
45G	A/C & HEAT SYS.-DR'S HTR
45H	A/C & HEAT SYS.-EVAP. SPEED
46	EXTERIOR LTS-MARKER
46A	EXTERIOR LTS-AUX LTS RESIS.
46C	EXTERIOR LTS-MARKER
46D	EXTERIOR LTS-AUX LTS RESIS.
48	ENTRANCE DOOR OPEN SIGNAL
48A	ENTRANCE DOOR OPEN SOL.
48B	ENTRANCE DOOR OPEN SIGNAL
48C	ENTRANCE DOOR SYSTEM
48D	ENTRANCE DOOR SYSTEM
48W	ENTRANCE DOOR SEDAN
49	ÈNTRANCE DOOR CLOSE SIGNAL
49A	ENTRANCE DOOR SYSTEM
49B	ENTRANCE DOOR SYSTEM
50	AD-9 AIR DRYER
52	ALARM & SIGNAL-ELEC.HORN
52A	ALARM & SIGNAL-ELEC.HORN
52B	PNEUMATIC HORN
53	ALARM & SIGNAL-ELEC.HORN
53B	WIPER & WASHER SYSTEM
53C	WIPER & WASHER SYSTEM
53E	WIPER & WASHER SYSTEM
53J	WIPER & WASHER SYSTEM
55	EXTERIOR LTS-HI BEAM
57	EXTERIOR LTS-HI BEAM
57A	EXTERIOR LTS-HI BEAM
57B	A/C & HEAT SYS.-WATER PUMP
57C	A/C & HEAT SYS.-WATER PUMP
57E	A/C & HEAT SYS.-WATER VALV
57W	PRE-HEAT WATER HEATER
58	EXTERIOR LTS-LO BEAM

N0.	DESCRIPTI0N
58A	EXTERIOR LTS-LO BEAM
58B	EXTERIOR LTS-LO BEAM
59A	ENGINE BRAKE SYSTEM
61	EXTERIOR LTS-24V FEED SW
61A	EXTERIOR LTS-HEAD SIGNAL
62	LAVATORY INDICATOR
63	EXTERIOR LTS-CLEAR. FEED
63B	EXTERIOR LTS-CLEARANCE
63C	EXT. LTS-MARKER SIGNAL
63D	BLINKER RELAY
63E	BLINKER RELAY
63F	EXT. LTS-MARKER BLINKER
64	DRIVER'S FAN SPEED CTR
64A	A/C SPARE
64B	A/C SPARE
65	FOOT DAMPER MOTOR
65A	FOOT DAMPER MOTOR
65D	DRIVER'S REC. DAMPER
65E	DRIVER'S REC. DAMPER L.H.
65F	DRIVER'S REC. DAMPER L.H.
66	A/C PASSENGER – ON/OFF
67A	A/C & HEAT SYSTEM
68	DASH & DEFROST DAMPER MOT
68A	DASH & DEFROST DAMPER MOT
69	DAMPER MIX LIMIT SWITCH
70	HAT RACK & NIGHT LTS FEEDING
72	SUN VISOR - FEED
72A	SUN VISOR RH
72B	SUN VISOR RH
72C	SUN VISOR LH
72D	SUN VISOR LH
74	R.H. READING LAMP FEEDING
74A	R.H. HOTESS CHIME FEEDING
74B	WCL R.H. READING LAMP FEED.
74D	READING LAMP SWITCH
74J	READING LAMP INDICATOR SW.
75	L.H. READING LAMP FEEDING
75A	L.H. HOTESS CHIME FEEDING
76	FUEL TANK GAUGE
76C	LOW FUEL T.T.LT
76M	FUEL PRIME PUMP
76P	FUEL PRIME PUMP FEEDING
77B	A/C SYS. – LIQ. SOL. VALVE
77C	A/C & HEAT SYS.-COMPRESSOR
77H	A/C SYS.-LIQ. SOL. VALVE
81	EXTERIOR LTS-STOP SW
82	EXTERIOR LTS-STOP SIGNAL

CIRCUIT NUMBER C0DE

N0.	DESCRIPTI0N
82A	EXTERIOR LTS-STOP SIGNAL
82B	EXTERIOR LTS-STOP LTS
82C	EXTERIOR LTS-STOP LTS
82L	EXT. LTS-STOP LTS & CYCLOP
82R	EXTERIOR LTS-STOP LTS
83	ENG. CTR-MAST. KEY SW ACC.
83A	24V&12V CUT RELAY COIL
83B	24V&12V CUT RELAY COIL
84	ENG. CTR-MAST KEY SW START
84A	ENG. CTR-MAST KEY SW START
84J	ENG. CTR-MAST KEY SW START
85	24V IGNITION SIGNAL
85A	24V IGN DASH INSTRUMENT.
85C	24V IGNITION - FEED
85F	RAD. FAN CONTROL W/RETARD
85W	OUT SPEED INTERLOCK–24V IGN.
85X	ABS-24V IGN
85Y	ABS-WARNING LT
86	ENG. CTR-STARTER SOL.
86A	ENG. CTR-STARTER RELAY COIL
86F	TELL TALE STARTER ON
86T	TELL TALE STARTER ON
87B	ENGINE CTR-24V IGNITION
88	ENGINE CTR-RR START SIGNAL
89	ENGINE CTR-RR START SIGNAL
90	DASH MAGNETIC SWITCH
90B	ENG. CTR-MAST KEY SW FEED
91	PARKING BRAKE SW SIGNAL
91A	DDEC -FAST IDLE SIGNAL
91B	D.R.L. CANCEL RELAY
91C	PARKING BRAKE – T.T.LT
91J	FAST IDLE – JUMPER SW.
91W	WCL PARKING BRAKE SIGNAL
92	BATT. EQUAL.-CHECK BALANCE
93	BATT. EQUALIZ.-CHECK LO/HI
95A	ENG. BRAKE & RETARDER SYS.
95B	ENG. BRAKE & RETARDER SYS.
100	INTERIOR LTS RELAY COIL
100	INDIRECT LTS FEEDING
100A	INDIRECT LTS RELAY COIL
100B	INDIRECT LTS FEEDING
100C	INDIRECT LTS FEEDING
101	24 VOLTS POWER STARTER
101	WORLD TR..– LO SIGN SOL.LO
102	24 VOLTS A/C DISTRIBUTION
102	WORLD TRANSM.–SOL. SUPPLY
102A	BOSCH ALTERNATOR FEEDING

N0.	DESCRIPTI0N
103	WORLD TRANSM.- B.SOL.LO
103	LOW BUOY SYSTEM
104	WORLD TR. –G SOL.
105W	WORLD TR-SOL.–RET.OIL TT.LT
107	WORLD TR. - SOL. SUPPLY
110	WORLD TR.-F SOL. LO
112	WORLD TR.-SPARE OUTPUT (+)
113W	WORLD TR.-REVERSE WARNING
113Z	ZF TRANSM.- REVERSE
114	INTERIOR LT-DASH LT RHEOS.
114A	INTERIOR LT-DASH LT RHEOS.
114B	INT. LT-DASH LT RHEOST.FEED
115	DDEC -COOLANT LEVEL
115W	TRANSM.-DO NOT SHIFT SIGN
115W	ZF -CHECK TRANSM. TTLT
116	WORLD TR.-SOL. SUPPLY
116B	A/C & HEAT SYSTEM-DR'S HTR
116C	A/C SYS.–TRIG. DEFROST
119	WORLD TRANSM-ENGINE BRAKE
120	WORLD TRANSM-A SOL.
121	WORLD TRANSM-SOL.SUPPLY
123	WORLD TR.-NEUTRAL START
123A	ALARM & SIGNAL-FIRE DETECT.
123B	ALARM & SIGNAL-FIRE DETECT.
124	WORLD TR.-SENSOR POWER
124A	WORLD TRANSM-SENSOR PWR
125	LAVATORY FAN
125	WORLD TR-RETARDER INDICAT.
125W	WORLD TR-RETARDER INDICAT.
126	24 V IGN. SPEED SWITCH
126A	KNEELING SYSTEM
126AA	KNEELING SYSTEM
126B	HI-BUOY SIGNAL
126C	KNEELING SYSTEM
126D	KNEELING SYSTEM
126F	KNEELING SYSTEM
126G	KNEELING SYSTEM
126H	SPEED SIGN 5NC – 24V
126K	KNEELING SYSTEM
126L	KNEELING SYSTEM
126P	KNEELING SYSTEM
126R	KNEELING SYSTEM
126S	KNEELING SYSTEM
126T	KNEELING SYSTEM
126W	KNEELING SYSTEM
126W	WORLD TRANSM-NOT USED

N0.	DESCRIPTI0N
127	WORLD TRANSM. – H SOL.
127	24HOT WIRE PREHEAT
127A	PRE-HEAT WATER HEATER
127B	PRE-HEAT WATER HEATER
127S	PRE-HEAT WATER HEATER
128	WORLD TRANSM-B SOL.
128A	PRE-HEAT WATER HEATER
128B	PRE-HEAT WATER HEATER
129	WORLD TRANSM-E SOL.
129	PRE-HEAT WATER HEATER
129B	PRE-HEAT WATER HEATER
130	WORLD TRANSM-SOL. SUPPLY
130	EVAP. FAN MAIN CABLE
130A	EVAP. FAN MAIN CABLE
131	WORLD TRANSM-D SOL.
132	WORLD TRANSM-ENGINE BRAKE
133	GALLEY HEATING CONTAINER
133A	GALLEY HEATING CONTAINER
133B	GALLEY HEATING CONTAINER
133C	GALLEY HEATING CONTAINER
134	GALLEY HEATING CONTAINER
134A	GALLEY HEATING CONTAINER
135	GALLEY HEATING CONTAINER
135A	WORLD TR.-RES MODULE RET.
135B	A/C & HEAT SYS.-AIR SENSOR
135C	A/C & HEAT SYS.-AIR SENSOR
136	MICRO-WAVE OVEN SWITCH
136A	GALLEY LAMP
136A	WORLD TRANSM-12V BATTERY
136A1	WORLD TRANSM-12V BATTERY
136A2	WORLD TRANSM-12V BATTERY
136AA	WORLD TRANSM-SHIFTER PWR
136V	WORLD TRANSM-12V BATTERY
136W	WORLD TRANSM-12V BATTERY
136X	WORLD TRANSM-12V BATTERY
137	WORLD TRANSM-RETARDER
137	RR VIEW MIRROR
137A	RR VIEW MIRROR
137B	RR VIEW MIRROR
137C	RR VIEW MIRROR
137D	RR VIEW MIRROR
137E	RR VIEW MIRROR
137F	RR VIEW MIRROR
137H	RR VIEW MIRROR
137J	RR VIEW MIRROR
137K	RR VIEW MIRROR
137L	RR VIEW MIRROR
137M	RR VIEW MIRROR FEED
137R	WORLD TRANSM-RETARDER
137T	MIRROR HEAT SW-JUMPER

N0.	DESCRIPTI0N
138	WORLD TR.-RETARDER TEMP
138	ABS SYSTEM-SENSOR
138A	ABS SYSTEM-SENSOR
139	ABS SYSTEM-VALVE
139	WORLD TR.-OUTPUT SPEED HI
140	WORLD TR.-TURBINE SPEED LO
140	ABS SYSTEM-VALVE
141	ABS SYSTEM-VALVE
141	WORLD TR.-ENGINE SPEED HI
142	ABS SYSTEM-VALVE
143	ABS SYSTEM-SENSOR
143A	ABS SYSTEM-SENSOR
143A	WORLD TRANS-BATERY GRD
143W	WORLD TRANSM-BATTERY GRD
143X	WORLD TRANSM-BATTERY GRD
143Y	WORLD TRANSM.BATT.GRD
143W	FROM GROUND STUD
144	ABS SYSTEM-SENSOR
144A	ABS SYSTEM-SENSOR
145	ABS SYSTEM
146	ABS SYSTEM
146A	WORLD TRANSM-12V IGNITION
146AA	WORLD TRANSM-DIAGN.CONN.
147	WORLD TRANSM-OIL TEMP
147	ABS SYSTEM-VALVE
147A	ETHER COLD START
147C	ETHER COLD START
148	ABS SYSTEM-VALVE
148	WORLD TR.-OUTPUT SPEED LO
149	WORLD TR.-TURBINE SPEED HI
149	ABS SYSTEM-SENSOR
149A	ABS SYSTEM
150	WORLD TR.-ENGINE SPEED LO
150	DDEC -ECM BATTERY GRD
150A	DDEC -ECM BATTERY GRD
151	DDEC -ECM BATTERY GRD
151	ATC VALVE
152	ATC VALVE
153	ELECTRICAL DRIVER'S SEAT
154	WORLD TRANSM-ABS INPUT (-)
156A	ABS SYSTEM-FEED
157B	ABS SYSTEM
159	WORLD TRANSM-DIAGNOSTIC
160	ALARM & SIGN.-TAG PRESS SW
161B	WORLD TRANSM-SIGNALGRD
162	WORLD TRANSM-PRESS. SW C3
163	WORLD TR.-RETARDER ENABLE
164	WORLD TR.-RET. ACTUAT. SIGN
165	WORLD TR.-OIL LEVEL SIGNAL
166	WORLD TRANSM. OUTPUT 7

CIRCUIT NUMBER C0DE

N0.	DESCRIPTI0N
167	W. TR.-OUT SPEED INTERLOCK
167Z	ZMTEC MODULE
169	WORLD TRANSM-PRE-SELECT #1
170	WORLD TRANSM-SHIFTER
170C	LUGGAGE DOOR LOCK-T.T.LT
170D	LUGGAGE DOOR LOCK-FEED
170E	LUG. DOOR LOCK-UNLOCK SIGN
170F	LUGGAGE DOOR LOCK-FEED
170G	LUGGAGE DOOR LOCK-FEED
170K	LUGGAGE DOOR-LOCK SIGN
170L	LUGG DOOR LOCK-SIGN T.T.LT
170N	LUGG DOOR LOCK-SIGN T.T.LT
170R	LUGG DOOR LOCK-SIGN. T.T.LT.
170S	LUGG DOOR LOCK-SIGN T.T.LT
170T	LUGG DOOR LOCK-SIGN T.T.LT
170V	LUGG DOOR LOCK-SIGN T.T.LT
170W	LUGGAGE DOOR LOCK-FEED
170X	LUGG DOOR LOCK-SIGN T.T.LT
170Y	LUGGAGE DOOR LOCK-FEED
170Z	LUGGAGE DOOR LOCK
171	WORLD TRANSM-SHIFTER
172	WORLD TRANSM-SHIFTER
173	WORLD TRANSM-SHIFTER
174	WORLD TRANSM-SHIFTER
175A	WORLD TRANSM-SHIFTER
176	WORLD TRANSM-SHIFTER
180	OUTSIDE TEMP. DISPLAY
180A	OUTSIDE TEMP. DISPLAY
180A	WORLD TRANSM-SHIFTER
180B	OUTSIDE TEMP. DISPLAY
180C	OUTSIDE TEMP. DISPLAY
181	FROZEN POINT T.T.LT
181A	TEMP. CTR'L INSIDE SENSOR
181B	TEMP. CTR'L INSIDE SENSOR
181C	THERMOMET. OUTSIDE SENSOR
181D	THERMOMET. OUTSIDE SENSOR
195	WORLD TRANSM-TRANS ID
197	FUEL WATER FILTER
197A	FUEL WATER FILTER
201	WORLD TRANSM-SPARE
202	WORLD TRANSM-SPARE
203	WORLD TRANSM-SPARE
204	WORLD TRANSM-SPARE
214	WORLD TR.-BACK-UP SIGNAL
231	WORLD TR.-NEUTRAL SIGN GRD

N0.	DESCRIPTI0N
231F	WORLD TR.-NEUTRAL SIGN GRD
231W	W.TR.-NEUTRAL SIGN GRD WCL
231Z	ZF NEUTRAL SIGNAL GRD
240	DDEC -ECM 12V FEEDING
241	DDEC -ECM 12V FEEDING
253	24V SIGNAL GALLEY INVERTER
254	GALLEY REFRIGERATOR
254A	GALLEY REFRIGERATOR
254F	GALLEY REFRIGERATOR
255	GALLEY COFFEEMAKER
255A	GALLEY COFFEEMAKER
255B	GALLEY COFFEEMAKER
260	WINDOW AJAR-T.T.LT
290	FAN CLUTCH RADIATOR-FEED
290A	FAN CLUTCH RADIATOR-FEED
291	FAN CLUTCH RADIATOR SPD 1
292	FAN CLUTCH RADIATOR SPD 2
292J	FAN OVERRIDE LTS SWITCH
300	WCL POWER SYS. & ACCESS.
300A	WCL POWER SYSTEM SW.
301J	WCL POWER SW. JUMPER LED
301	WCL SIGNAL POWER SW.
302	WCL DOOR AJAR TTLT& ALARM
303	WCL FR RH FLASHER
303A	WCL FR RH FLASHER
304	WCL DOOR TOP LT.
305	WCL PARKING BRAKE SOL. VALVE
305A	WCL DOOR OPEN SIGNAL
305B	WCL DOOR TOP LT.
306	WCL CONTROL SYSTEM
307	WCL CONTROL SYSTEM
308	WCL CONTROL SYSTEM
309	WCL CONTROL SYSTEM
417	DDEC-LIMIT SPEED GOVERNOR
419	DDEC -CHEK ENGINE LIGHT
439	DDEC-12V IGNITION
451	DDEC-A/C FAN CLUTCH
499	DDEC-OUTPUT PWR SHUTDOWN
505	DDEC-TACHOMETER DRIVE
509	DDEC-STOP ENGINE LIGHT
510	DDEC-FAST IDLE SIGNAL
524	DDEC-ENGINE BRAKEDISABLE
524B	ZF SIGNAL–AUX.SENS.THROTTLE
525	DDEC-FAST IDLE SIGNAL
528	DDEC-STOP ENG. OVERRIDE
531	DDEC-CRUISE CLUTCH CUT OUT
540	DDEC-CRUISE ENABLE T.T.LT
541	DDEC-CRUISE SET SW

N0.	DESCRIPTI0N
542	INPUT PARK BRAKE INTERLOCK
543	DDEC-CRUISE BRAKE PEDAL
544	DDEC-CRUISE ON/OFF SW
545	DDEC-CRUISE RESUME SW
555	DDEC-FAN CLUTCH SPEED#1
556	DDEC-VEHICULE SPEED (+)
557	DDEC-VEHICULE SPEED (-)
563	DDEC-FAN CLUTCH SPEED#2
564	DDEC-DIGTAL OUTPUT
564B	DDEC-DIGTAL OUTPUT
565	DDEC-ENGINE BRAKE ACTIVE
565Z	DECELERATION LTS
583	DDEC-ENGINE BRAKE 4 CYL.
700	J1587(+)
701	J1587(-)
705	ZF SIGNALS
706	ZF SIGNALS
707	ZF SIGNALS
717	ZF SIGNALS
718	ZF SIGNALS
719	ZF SIGNALS
720	ZF SIGNALS
740	EASY START VALVE
761	ZF SIGNALS
900	DDEC-DATA LINK (+)
901	DDEC-DATA LINK (-)
908	DDEC-HYDRAU. PWM#1 OUTPUT
916	DDEC-SENSOR SUPPLY (5VDC)
925	J1939(+)
926	J1939(-)
927	J1939(SHIELD)
952	DDEC-SENSOR RETURN#1
953	DDEC-SENSOR RETURN#2
979	DDEC-ENGINE BRAKE 2 CYL.
2123	FLASHER SIGNAL LTS

N0.	DESCRIPTI0N

CIRCUIT NUMBER C0DE

N0.	DESCRIPTI0N
A1	RADIO SYSTEM
A2	RADIO SYSTEM
A3	AUDIO AMPLI
A8	VIDEO SYSTEM
A9	RADIO SYSTEM
A10	AUDIO AMPLI
A11	AUDIO AMPLI
A12	AUDIO AMPLI
A13	AUDIO AMPLI
A15	AUDIO AMPLI
A16	VIDEO SYSTEM
B1	MICROPHONE
B2	MICROPHONE
B3	MICROPHONE
B4	MICROPHONE
B5	MICROPHONE
B6	MICROPHONE
B7	MICROPHONE
B8	MICROPHONE
B10	MICROPHONE
B11	MICROPHONE
B12	MICROPHONE
B1A	FLUORESCENT BALLAST
B1B	FLUORESCENT BALLAST
B2A	FLUORESCENT BALLAST
B2B	FLUORESCENT BALLAST
B3A	FLUORESCENT BALLAST
B3B	FLUORESCENT BALLAST
B4A	FLUORESCENT BALLAST
B4B	FLUORESCENT BALLAST
B5A	FLUORESCENT BALLAST
B5B	FLUORESCENT BALLAST
B6A	FLUORESCENT BALLAST
B6B	FLUORESCENT BALLAST
B7A	FLUORESCENT BALLAST
B7B	FLUORESCENT BALLAST
B14	RADIO SYSTEM
B15	RADIO SYSTEM
C2	RADIO SYSTEM
C3	CONTROL HEAD ANTENNA
C5	VIDEO SYSTEM
C6	CONTROL HEAD DIMMER
C7	RADIO SYSTEM
C8	AUDIO AMPLI
C9	VIDEO SYSTEM
C10	VIDEO SYSTEM
C11	VIDEO SYSTEM
C12	VIDEO SYSTEM
C13	VIDEO SYSTEM
C14	VIDEO SYSTEM

N0.	DESCRIPTI0N
C15	AUDIO AMPLI
D1	PASSENGER SPEAKER
D2	PASSENGER SPEAKER
D3	PASSENGER SPEAKER
D4	PASSENGER SPEAKER
D4S	PASSENGER SPEAKER
D5	PASSENGER SPEAKER
D6	PASSENGER SPEAKER
D7	PASSENGER SPEAKER
D8	PASSENGER SPEAKER
DR1	DRIVER'S SPEAKER
DR2	DRIVER'S SPEAKER
DR3	DRIVER'S SPEAKER
DR4	DRIVER'S SPEAKER
G1	PASSENGER SPEAKER
G2	PASSENGER SPEAKER
G3	PASSENGER SPEAKER
G4	PASSENGER SPEAKER
G5	PASSENGER SPEAKER
G6	PASSENGER SPEAKER
G7	PASSENGER SPEAKER
G8	PASSENGER SPEAKER
G8S	PASSENGER SPEAKER
IPJ1	CLUSTER – BULB TEST POS
IPJ2	CLUSTER – BULB TEST NEG.
IPJ5	CLUSTER – FUEL GAUGE
IPJ6	CLUSTER – BULB TEST POS.
IPJ7	CLUSTER – BULB TEST NEG.
IPJ8	CLUSTER – MASTER WARNING
L8	WATER TANK HEATER
L9	WATER TANK HEATER
LX5	CLUSTER – COMPUTER MODE
LX6	CLUSTER – COMPUTER DOWN
LX7	CLUSTER – COMPUTER SET
LX16	CLUSTER – COMPUTER UP
LX21	CLUSTER – COMPUTER COM.
R1A	FLUORESCENT BALLAST
R1B	FLUORESCENT BALLAST
RT	T.T.L.T. MODULE – TEST SW.
SPK1	PASSENGER SPEAKER
SPK2	PASSENGER SPEAKER
SPK3	PASSENGER SPEAKER
SPK4	PASSENGER SPEAKER
SP1	SPARE WIRE
SP2	SPARE WIRE
SP3	SPARE WIRE
SP4	SPARE WIRE
SP5	SPARE WIRE
SP6	SPARE WIRE
SP7	SPARE WIRE

N0.	DESCRIPTI0N
SP8	SPARE WIRE
SP9	SPARE WIRE
SP10	SPARE WIRE
SP11	SPARE WIRE
SP12	SPARE WIRE
SP13	SPARE WIRE
SP14	SPARE WIRE
SP15	SPARE WIRE
SP16	SPARE WIRE
SP17	SPARE WIRE
SP18	SPARE WIRE
SP19	SPARE WIRE
SP20	SPARE WIRE
SP21	SPARE WIRE
SP23	SPARE WIRE
SP24	SPARE WIRE
SP25	SPARE WIRE
SP26	SPARE WIRE
SP27	SPARE WIRE
SP28	SPARE WIRE
SP30	SPARE WIRE
SP33	SPARE WIRE
SP34	SPARE WIRE
SP35	SPARE WIRE
SP36	SPARE WIRE
SP37	SPARE WIRE
SP38	SPARE WIRE
SP40	SPARE WIRE
SP41	SPARE WIRE
SP42	SPARE WIRE
SP43	SPARE WIRE
SP44	SPARE WIRE
SP45	SPARE WIRE
SP48	SPARE WIRE
SP50	SPARE WIRE
SP51	SPARE WIRE
SP52	SPARE WIRE
SP53	SPARE WIRE
SP54	SPARE WIRE
SP55	SPARE WIRE
SP56	SPARE WIRE
SP57	SPARE WIRE
SP60	SPARE WIRE
SP61	SPARE WIRE
SP62	SPARE WIRE
SP63	SPARE WIRE
SP64	SPARE WIRE
SP65	SPARE WIRE
SP66	SPARE WIRE
SP67	SPARE WIRE

N0.	DESCRIPTI0N
SP69	SPARE WIRE
SP70	SPARE WIRE
SP71	SPARE WIRE
SP72	SPARE WIRE
SP74	SPARE WIRE
SP75	SPARE WIRE
SP76	SPARE WIRE
SP77	SPARE WIRE
SP78	SPARE WIRE
SP80	SPARE WIRE
SP81	SPARE WIRE
SP82	SPARE WIRE
SP83	SPARE WIRE
SP84	SPARE WIRE
SP85	SPARE WIRE
SPZ1	SPARE WIRE-ZF TRANSM.
SPZ2	SPARE WIRE-ZF TRANSM.
SPZ3	SPARE WIRE-ZF TRANSM.
SPZ4	SPARE WIRE-ZF TRANSM.
SPZ5	SPARE WIRE-ZF TRANSM.
SPZ6	SPARE WIRE-ZF TRANSM.
TW1	TWISTED SPARE
TW2	TWISTED SPARE
W1	STEERING BOX CONVERTER
W2	STEERING BOX CONVERTER
Y1A	FLUORESCENT BALLAST
Y1B	FLUORESCENT BALLAST
Y2A	FLUORESCENT BALLAST
Y2B	FLUORESCENT BALLAST
Y3A	FLUORESCENT BALLAST
Y3B	FLUORESCENT BALLAST
Y4A	FLUORESCENT BALLAST
Y4B	FLUORESCENT BALLAST
Y5A	FLUORESCENT BALLAST
Y5B	FLUORESCENT BALLAST
Y6A	FLUORESCENT BALLAST
Y6B	FLUORESCENT BALLAST
Y7A	FLUORESCENT BALLAST
Y7B	FLUORESCENT BALLAST
0	BATTERY – MAIN GROUND
0	EVAP. COMPT. GROUND
0	RJB – INSIDE GRD
0	WCL MODULE
0	INVERTER CUT OFF RELAY
0A	LAVATORY ACCESSORIES
0A	EVAP. FAN GROUND
0A	FR. ROOF ACC. GRD
0B	BOOSTER BLOCK GROUND
0B	A/C – CONDENSER GRD
0B	24V&12V CUT OUT REL.COIL

CIRCUIT NUMBER C0DE

N0.	DESCRIPTI0N
0BE	OV BATTERY MONITOR
0C	R.J.B. - GRB
0C	MOTOR STARTER GROUND
0C	F.R. SERV. CPT- ACC.
0C1	ENTRACE DOOR SEDAN
0C2	STEERING CONTROL GROUND
0C3	SOUND SYSTEM RELAY
0C4	F.J.B. GRD
0CJ	CRUISE SW. JUMPER
0D	FLUORESCENT GRD
0D	COND FAN GRD
0E	BATT. COMPT. LTS GROUND
0E	READING LIGHTS GROUND
0F	FLUORESCENT GRD
0F	PRO-DRIVER GROUND
0G	READING LIGHTS GROUND
0H	ENG. CPT. – ACC. GRD
0IN	INTERCOM SYSTEM
0J	PARCEL RACK A/C UNIT
0K	PARCEL RACK A/C UNIT
0L	ENG.CPT –CLEAR.LTS RR ROOF
0L	R.J.B. - GRD
0L	FR – SIDE MARK. & FLASH GRD
0L1	ENG.CPT–SIDE MARK. & FL. GRD
0L2	HEAD LTS GROUND
0L3	FR.SERV.DR. & ENT.DOOR GRD
0L4	FOG LTS RESISTOR GRD
0L5	LH CONSOL – ACC. GRD
0L5	W.C.L.DOOR
0L6	MARKER&FLASH. GROUND
0L7	AISLE LIGHTS GROUND
0L8	DOCKING LTS
0LV	WINDSHIELD WASHER LEVEL
0M	WIPER 2 MIRROR MOTOR
0M3	DEFROST GRD
0M4	HORN & DR'S WINDOW LIFTER
0M5	SUN VISOR MOTOR
0M6	UPPER FAN DEFROST
0M7	DR'S WIND.LIFT. & RH MIR. SW
0M7A	LH MIRROR SW.
0P	ENG.CDT – PRE-HEATER
0P1	A/C COMPRESSOR GRD
0R	SOUND SYSTEM RELAY GROUND
0SA	BOSCH ALTERNATOR GROUND
0SA	PARCEL RACK LTS SWITCH
0SB	PARCEL RACK LTS SWITCH
0SC	PARCEL RACK LTS SWITCH
0SE	PARCEL RACK LTS SWITCH

N0.	DESCRIPTI0N
0SF	PARCEL RACK LTS SWITCH
0SG	PARCEL RACK LTS SWITCH
0SH	PARCEL RACK LTS SWITCH
0SJ	PARCEL RACK LTS SWITCH
0SS	SOUND SYSTEM GROUND
00SS	SOUND SYSTEM GROUND
0S2	RADIO GROUND
0S3	VIDEO GROUND
0S3A	VIDEO GROUND
0S3B	VIDEO GROUND
0S3C	VIDEO GROUND
0S3D	VIDEO GROUND
0S3E	VIDEO GROUND
0T	LAVATORY FAN & PUMP
0T	SPEED SW. CONNECTOR
0T1	DASH ACC. GROUND
0T2	CLUSTER ACC. GROUND
0T2	WINDOW AWNING
0T3	ALTERNATOR MODULE
0T4	12V OUTLET – CTR MODULE
0T5	FS.HVAC DASH MODULE. GND
0T6	FS-DDR GROUND
0VA	BATTERY EQUALIZER GROUND
0W	FJB – TRANSM. RLY GRD
0W	SHIFT SELECTOR GROUND
0W	WCL MODULE
0WA	WCL DOOR AJAR
0WC	WCL BATTERY CPT. ACCES.
0WL	WCL SIGNAL DOOR AJAR ALARM
0Y1	ABS SYSTEM-GRD
0Y2	ABS SYSTEM-GRD
0Y3	ABS SYSTEM-GRD
0Y4	ABS SYSTEM-GRD
0Y5	ABS SYSTEM-GRD
0Y6	ABS SYSTEM-GRD
0Z1	ZF TRANSM. GRD
0Z2	ZF TRANSM. GRD
00A	ELECTRONIC TERMINAL GROUND
00F	FRONT ELECTRONIC GROUND
2B	A/C & HEAT SYSTEM
2D	A/C & HEAT SYSTEM
2DD	A/C & HEAT SYSTEM
2E	A/C & HEAT SYSTEM
2EE	A/C & HEAT SYSTEM
2F	A/C & HEAT SYS.-EVAP. SPEED
2H	A/C & HEAT SYS–LO-PRESS SW.
2L	A/C & HEAT SYS–HI-PRESS SW.
4A	HOTESS CHIME MAIN SWITCH

N0.	DESCRIPTI0N
4C	HOTESS CHIME P. RACK SW.
5	AISLE LTS FEEDING
5N	EMERGENCY LTS
5N0	SPEED SIGNAL HIGHER 5MPH
5NC	SPEED SIGNAL LOWER 5MPH
6	AISLE LTS
7B	ENTRANCE DOOR FEED.-24V HW
9	INTERIOR LTS-ENGINE CPT
9F	INTERIOR LTS – FR-SERV. CPT
10	INTERIOR LTS-LUGGAGE CPT
10	INTERIOR LTS-FR SERV. CPT
10A	INTERIOR LTS-LUGGAGE CPT
10A	AUX. COMPRESSOR CLUTCH
10B	INTERIOR LTS-LUGGAGE CPT
10C	INTERIOR LTS-LUGGAGE CPT
10E	INTERIOR LTS-BATTERY CPT
10H	AUX. COMPRESSOR CLUTCH
10L	AUX. COMPRESSOR CLUTCH
10X	AUX. COMPRESSOR CLUTCH
11	DESTINATION SIGN
11A	DESTINATION SIGN
11B	DESTINATION SIGN
11C	DESTINATION SIGN
11D	DESTINATION SIGN
11E	DESTINATION SIGN
11K	DESTINATION SIGN
11J	DESTINATION SIGN
11P	DESTINATION SIGN
12	12V ELECTRONIC TERMINAL
12A	FR JCT PANEL 12V DISC SW
12A	BATT. JCT PANEL 12V DISC SW
12B	FR JCT PANEL 12V DISC SW
12BE	12V BATTERY MONITOR
12C	FR JCT PANEL 12V DISC SW
12C	RR JCT BOX 12V DISC SW
12D	BATT. JCT PANEL 12V HOT WIRE
12D	FR JCT PANEL 12V HOT WIRE
12D	RR JCT PANEL 12V HOT WIRE
12DD	FR JCT PANEL 12V HOT WIRE
12DDR	FR JCT BOX 12V HOT DDR CONN
12DT	T.T. LT MODULE
12DZ	ZF TRANSM. 12V HOT WIRE
12E	FR JCT PANEL 12V DISC SW
12F	RR JCT PANEL 12V DISC SW
12F1	FR JCT PANEL 12V DISC SW
12F2	FR JCT PANEL 12V DISC SW
12FL	RR JCT PANEL 12V DISC SW
12FT	RR JCT PANEL 12V DISC SW
12G	FR JCT PANEL 12V DISC SW

N0.	DESCRIPTI0N
12H	12V IGN. DASH ACCESS.
12I	RR JCT BOX 12V IGNITION
12I	FR JCT PANEL 12V IGNITION
12IA	FR JCT PANEL 12V IGNITION
12IA	RR JCT PANEL 12V IGNITION
12IB	FR JCT PANEL 12V IGNITION
12IB	STEERING BOX ECU FEEDING
12IE	ABS-FR JCT PANEL 12V IGN.
12IZ	ZF TRANSM. IGNITION
12IN	12 VOLTS DISC.SW. INTERCOM
12J	FR JCT PANEL 12V DISC.SW.
12K	FR JCT PANEL 12V DISC.SW.
12L	CORNERING LTS FEEDING
12LX	CLUSTER 12V HOT WIRE
12M	ABS-FR JCT PNL 12V DISC.SW
12P	12V BATTERY JCT BLOCK
12R	12V MEMORY RADIO
12P	12V POWER OUTLET
12SB	12V SOUND SYSTEM FEEDING
12SS	12V SOUND SYSTEM FEEDING
12S	12V RADIO FEEDING
12S1	12V RADIO FEEDING
12S1A	12V DVD KARAOKE FEEDING
12S2	12V RADIO FEEDING
12S2A	12V DVD KARAOKE FEEDING
12T	RR JCT BOX 12V DISC SW
12VA	12V BATTERY EQUALIZER
12VB	FR JCT PANEL 12V DISC SW
12VD	12V HOT WIRE DISTRIBUTION
12VE	FR JCT PANEL 12V DISC SW
12VF	12 VOLTS FRONT DISTRIBUTIUON
12VG	RR JCT PANEL 12V DISC SW
12VI	12V IGNITION DISTRIBUTION
12VO	12V BATTERY EQUALIZER
12VR	12V REAR DISTRIBUTION
12W	12V HOT WIRE DDEC FEEDING
12WA	ENTRANCE DOOR SYSTEM
12WR	WCL DOOR TOP LT
14	LAVATORY PUMP
14A	LAVATORY PUMP- P.BUTTON
14P	LAVATORY PUMP
15	WIPER & WASHER FEEDING
16	SPEEDOMETER (+)
16T	SPEED SW SIGNAL IN (+)
17	EXTERIOR LTS-FLASHER UNIT
17A	EXTERIOR LTS-FLASHER UNIT
17C	JUMPER LTS SW. - HAZARD
18	UPPER FAN DEFROST
19	UPPER FAN DEFROST
20	SPEEDOMETER SIGNAL (-)

CIRCUIT NUMBER C0DE

N0.	DESCRIPTI0N
21	LEFT DIRECTIONNAL LTS
21A	LEFT DIRECTIONNAL LTS SIGN.
21B	HAZARD SWITCH SIGNAL
21BB	LEFT DIRECTIONNAL LTS FEED.
21H	EXTERIOR LTS-HAZARD SIGNAL
21M	AUX. LTS – DIRECTIONAL LH
23	RIGHT DIRECTIONNAL LTS
23A	RIGHT DIRECTIONNAL LTS SIGN.
23BB	RIGHT DIRECTIONNAL LTS FEED.
23H	EXTERIOR LTS-HAZARD SIGNAL
23K	RIGHT DIRECT. LTS W/KNELLING
23M	AUX LTS – DIRECTIONAL RH
24	24 VOLTS BATTERY DIST.
24	24 V. DISC. FRONT DIST.
24A	BATT. JCT PANEL 24V DISC SW
24A	24V BOOSTER BLOCK
24A	FR JCT PANEL 24V DISC. SW
24A	RR JCT PANEL 24V DISC. SW
24BE	BATTERY MONITOR
24C	FR JCT PANEL 24V DISC SW
24D	24 V. HOT WIRE FEEDING
24D	FR JCT BOX 24V HOT WIRE
24DD	FR JCT BOX 24V HOT WIRE
24DS	WIRELSS MICRO FEEDING
24DZ	ZF TRANSM. 24V HOT WIRE
24E	24 VOLTS POWER DISTRIBUTION
24E	RR JCT PANEL 24V DISC SW
24F	RR JCT PANEL 24V DISC SW
24G	FR JCT PANEL 24V DISC SW
24H	RR JCT PANEL 24V DISC SW
24I	FR JCT PANEL 24V IGNITION
24IA	RR JCT PANEL 24V IGNITION
24IA	FR JCT PANEL 24V IGNITION
24IB	FR JCT PANEL 24V IGNITION
24IF	FR JCT PANEL 24V IGNITION
24IZ	ZF TRANSM. IGNITION
24K	RR JCT PANEL 24V DISC SW
24L	RR JCT PANEL 24V DISC SW
24M	RR JCT PANEL 24V DISC SW
24P	FR JCT PANEL 24V DISC SW
24P2	RR BENCH- INVERTER
24PV	RR BENCH- INVERTER
24R	24V STARTER RELAY
24R	SCENIC VIEW SIGNAL ON
24SB	24V SOUND SYSTEM FEEDING
24SS	24V SOUND SYSTEM FEEDING

N0.	DESCRIPTI0N
24S1	AMPLIFIER FEEDING
24S1A	AMPLIFIER FEEDING
24S1B	AMPLIFIER FEEDING
24S1C	AMPLIFIER FEEDING
24S1D	AMPLIFIER FEEDING
24S1E	AMPLIFIER FEEDING
24S2	AMPLIFIER FEEDING
24S3	VIDEO FEEDING
24S3A	VIDEO FEEDING
24S3B	VIDEO FEEDING
24S3C	VIDEO FEEDING
24S3D	VIDEO FEEDING
24S3E	VIDEO FEEDING
24S3F	VIDEO FEEDING
24S3G	VIDEO FEEDING
24S3H	VIDEO FEEDING
24S3I	VIDEO FEEDING
24S3J	VIDEO FEEDING
24S4	VIDEO FEEDING
24T	RR JCT PANEL 24V DISC SW
24VA	24 VOLTS BATTERY EQUALIZER
24VD	24V HOT WIRE FEED
24VF	24 VOLTS FRONT DISTRIBUTION
24VI	24 VOLTS IGNITION REAR DIST.
24VR	24 VOLTS REAR DISTRIBUTION
24Y	24 VOLTS POWER GALLEY
24WC	WCL PUMP FEEDING
24WL	WCL PUMP FEEDING
24WR	WCL POWER ACCES.
25	EITHER ALTERNAT. RUN SIGNAL
25A	TT.LT. ALTERNATOR #1
25A1	BOSCH ALTERNATOR SIGNAL D+
25A2	BOSCH ALTERNATOR SIGNAL D+
25B	EXT. LTS-DAYTIME RUN LTS
25D	BOTH ALTERNATOR RUN SIGNAL
25K	T.T LT. ALTERNATOR #2
26	DR'S & ENT. WINDOW LIFTER
26A	CIGAR LIGHT. & POW.OUTLET LH
26B	DRIVER'S WINDOW LIFTER
26C	DRIVER'S WINDOW LIFTER
27	LAVATORY ALARM
28H	T.T.LT MODULE – HI A/C PRES.
28T	T.T.LT MODULE – LO A/C PRES.
29	A/C & HEAT SYS.-DR'S HTR
29H	HVAC DASH MODILE

N0.	DESCRIPTI0N
30A	GALLEY SWITCH SIGNAL
30J	GALLEY SWITCH LED
31B	WIPER & WASHER SYSTEM
32	EXTERIOR LTS-BACK-UP
32B	EXTERIOR LTS-BACK-UP
35	ENTRANCE STEP LIGHTS
36	ENGINE BRAKE SYSTEM
36A	ENGINE BRAKE SYSTEM & RET.
37	LAVATORY LTS FEEDING
38	FLUORESCENT RELAY FEEDING
38A	R.H FLUORESCENT
38B	L.H. FLUORESCENT
38C	FLUORESCENT FEEDING
39	INTERIOR LTS-DRIVER'S LTS
39D	INTERIOR LTS – DRIVER' LTS
41	A/C SYS.-COND FAN MOTOR
41A	A/C SYS.-COND FAN MOTOR
41B	A/C SYS.-COND FAN MOTOR
42	A/C SYS.-COND FAN MOTOR
42A	A/C SYS.-COND FAN MOTOR
43	PARCEL RACK A/C
43A	PARCEL RACK A/C
43B	PARCEL RACK A/C
43C	PARCEL RACK A/C
43D	PARCEL RACK A/C
43E	PARCEL RACK A/C
43F	PARCEL RACK A/C
43G	PARCEL RACK A/C
43M	PARCEL RACK A/C
43X	PARCEL RACK A/C
44	EXTERIOR LTS-FOG
44A	EXTERIOR LTS-FOG
44B	EXTERIOR LTS-FOG
44C	FOG,LTS & HVAC FEEDING
44D	EXTERIOR LTS - FOG
44E	EXTERNAL LTS - FOG
45A	A/C & HEAT SYSTEM FULL AIR
45B	A/C & HEAT SYS.-WATER PUMP
45C	A/C & HEAT SYS.-WATER VALV
45D	A/C & HEAT SYS.-WATER VALV
45G	A/C & HEAT SYS.-DR'S HTR
45H	A/C & HEAT SYS.-EVAP. SPEED
46	EXTERIOR LTS-MARKER
46A	EXTERIOR LTS-AUX LTS RESIS.
46C	EXTERIOR LTS-MARKER
46D	EXTERIOR LTS-AUX LTS RESIS.
48	ENTRANCE DOOR OPEN SIGNAL
48A	ENTRANCE DOOR OPEN SOL.
48B	ENTRANCE DOOR OPEN SIGNAL

N0.	DESCRIPTI0N
48C	ENTRANCE DOOR SYSTEM
48D	ENTRANCE DOOR SYSTEM
48W	ENTRANCE DOOR SEDAN
49	ÈNTRANCE DOOR CLOSE SIGNAL
49A	ENTRANCE DOOR SYSTEM
49B	ENTRANCE DOOR SYSTEM
50	AD-9 AIR DRYER
52	ALARM & SIGNAL-ELEC.HORN
52A	ALARM & SIGNAL-ELEC.HORN
52B	PNEUMATIC HORN
53	ALARM & SIGNAL-ELEC.HORN
53B	WIPER & WASHER SYSTEM
53C	WIPER & WASHER SYSTEM
53E	WIPER & WASHER SYSTEM
53J	WIPER & WASHER SYSTEM
55	EXTERIOR LTS-HI BEAM
57	EXTERIOR LTS-HI BEAM
57A	EXTERIOR LTS-HI BEAM
57B	A/C & HEAT SYS.-WATER PUMP
57C	A/C & HEAT SYS.-WATER PUMP
57E	A/C & HEAT SYS.-WATER VALV
57W	PRE-HEAT WATER HEATER
58	EXTERIOR LTS-LO BEAM
58A	EXTERIOR LTS-LO BEAM
58B	EXTERIOR LTS-LO BEAM
59A	ENGINE BRAKE SYSTEM
61	EXTERIOR LTS-24V FEED SW
61A	EXTERIOR LTS-HEAD SIGNAL
62	LAVATORY INDICATOR
63	EXTERIOR LTS-CLEAR. FEED
63B	EXTERIOR LTS-CLEARANCE
63C	EXT. LTS-MARKER SIGNAL
63D	BLINKER RELAY
63E	BLINKER RELAY
63F	EXT. LTS-MARKER BLINKER
64	DRIVER'S FAN SPEED CTR
64A	A/C SPARE
64B	A/C SPARE
65	FOOT DAMPER MOTOR
65A	FOOT DAMPER MOTOR
65D	DRIVER'S REC. DAMPER
65E	DRIVER'S REC. DAMPER L.H.
65F	DRIVER'S REC. DAMPER L.H.
66	A/C PASSENGER – ON/OFF
67A	A/C & HEAT SYSTEM
68	DASH & DEFROST DAMPER MOT
68A	DASH & DEFROST DAMPER MOT
69	DAMPER MIX LIMIT SWITCH
70	HAT RACK & NIGHT LTS

CIRCUIT NUMBER C0DE

N0.	DESCRIPTI0N
	FEEDING
72	SUN VISOR - FEED
72A	SUN VISOR RH
72B	SUN VISOR RH
72C	SUN VISOR LH
72D	SUN VISOR LH
74	R.H. READING LAMP FEEDING
74A	R.H. HOTESS CHIME FEEDING
74B	WCL R.H. READING LAMP FEED.
74D	READING LAMP SWITCH
74J	READING LAMP INDICATOR SW.
75	L.H. READING LAMP FEEDING
75A	L.H. HOTESS CHIME FEEDING
76	FUEL TANK GAUGE
76C	LOW FUEL T.T.LT
76M	FUEL PRIME PUMP
76P	FUEL PRIME PUMP FEEDING
77B	A/C SYS. – LIQ. SOL. VALVE
77C	A/C & HEAT SYS.-COMPRESSOR
77H	A/C SYS.-LIQ. SOL. VALVE
81	EXTERIOR LTS-STOP SW
82	EXTERIOR LTS-STOP SIGNAL
82A	EXTERIOR LTS-STOP SIGNAL
82B	EXTERIOR LTS-STOP LTS
82C	EXTERIOR LTS-STOP LTS
82L	EXT. LTS-STOP LTS & CYCLOP
82R	EXTERIOR LTS-STOP LTS
83	ENG. CTR-MAST. KEY SW ACC.
83A	24V&12V CUT RELAY COIL
83B	24V&12V CUT RELAY COIL
84	ENG. CTR-MAST KEY SW START
84A	ENG. CTR-MAST KEY SW START
84J	ENG. CTR-MAST KEY SW START
85	24V IGNITION SIGNAL
85A	24V IGN DASH INSTRUMENT.
85C	24V IGNITION - FEED
85F	RAD. FAN CONTROL W/RETARD
85W	OUT SPEED INTERLOCK–24V IGN.
85X	ABS-24V IGN
85Y	ABS-WARNING LT
86	ENG. CTR-STARTER SOL.
86A	ENG. CTR-STARTER RELAY COIL
86F	TELL TALE STARTER ON
86T	TELL TALE STARTER ON
87B	ENGINE CTR-24V IGNITION
88	ENGINE CTR-RR START SIGNAL
89	ENGINE CTR-RR START SIGNAL

N0.	DESCRIPTI0N
90	DASH MAGNETIC SWITCH
90B	ENG. CTR-MAST KEY SW FEED
91	PARKING BRAKE SW SIGNAL
91A	DDEC -FAST IDLE SIGNAL
91B	D.R.L. CANCEL RELAY
91C	PARKING BRAKE – T.T.LT
91J	FAST IDLE – JUMPER SW.
91W	WCL PARKING BRAKE SIGNAL
92	BATT. EQUAL.-CHECK BALANCE
93	BATT. EQUALIZ.-CHECK LO/HI
95A	ENG. BRAKE & RETARDER SYS.
95B	ENG. BRAKE & RETARDER SYS.
100	INTERIOR LTS RELAY COIL
100	INDIRECT LTS FEEDING
100A	INDIRECT LTS RELAY COIL
100B	INDIRECT LTS FEEDING
100C	INDIRECT LTS FEEDING
101	24 VOLTS POWER STARTER
101	WORLD TR..– LO SIGN SOL.LO
102	24 VOLTS A/C DISTRIBUTION
102	WORLD TRANSM.–SOL. SUPPLY
102A	BOSCH ALTERNATOR FEEDING
103	WORLD TRANSM.- B.SOL.LO
103	LOW BUOY SYSTEM
104	WORLD TR. –G SOL.
105W	WORLD TR-SOL.–RET.OIL TT.LT
107	WORLD TR. - SOL. SUPPLY
110	WORLD TR.-F SOL. LO
112	WORLD TR.-SPARE OUTPUT (+)
113W	WORLD TR.-REVERSE WARNING
113Z	ZF TRANSM.- REVERSE
114	INTERIOR LT-DASH LT RHEOS.
114A	INTERIOR LT-DASH LT RHEOS.
114B	INT. LT-DASH LT RHEOST.FEED
115	DDEC -COOLANT LEVEL
115W	TRANSM.-DO NOT SHIFT SIGN
115W	ZF -CHECK TRANSM. TTLT
116	WORLD TR.-SOL. SUPPLY
116B	A/C & HEAT SYSTEM-DR'S HTR
116C	A/C SYS.–TRIG. DEFROST
119	WORLD TRANSM-ENGINE BRAKE
120	WORLD TRANSM-A SOL.
121	WORLD TRANSM-SOL.SUPPLY
123	WORLD TR.-NEUTRAL START
123A	ALARM & SIGNAL-FIRE DETECT.
123B	ALARM & SIGNAL-FIRE DETECT.
124	WORLD TR.-SENSOR POWER

N0.	DESCRIPTI0N
124A	WORLD TRANSM-SENSOR PWR
125	LAVATORY FAN
125	WORLD TR-RETARDER INDICAT.
125W	WORLD TR-RETARDER INDICAT.
126	24 V IGN. SPEED SWITCH
126A	KNEELING SYSTEM
126AA	KNEELING SYSTEM
126B	HI-BUOY SIGNAL
126C	KNEELING SYSTEM
126D	KNEELING SYSTEM
126F	KNEELING SYSTEM
126G	KNEELING SYSTEM
126H	SPEED SIGN 5NC – 24V
126K	KNEELING SYSTEM
126L	KNEELING SYSTEM
126P	KNEELING SYSTEM
126R	KNEELING SYSTEM
126S	KNEELING SYSTEM
126T	KNEELING SYSTEM
126W	KNEELING SYSTEM
126W	WORLD TRANSM-NOT USED
127	WORLD TRANSM. – H SOL.
127	24HOT WIRE PREHEAT
127A	PRE-HEAT WATER HEATER
127B	PRE-HEAT WATER HEATER
127S	PRE-HEAT WATER HEATER
128	WORLD TRANSM-B SOL.
128A	PRE-HEAT WATER HEATER
128B	PRE-HEAT WATER HEATER
129	WORLD TRANSM-E SOL.
129	PRE-HEAT WATER HEATER
129B	PRE-HEAT WATER HEATER
130	WORLD TRANSM-SOL. SUPPLY
130	EVAP. FAN MAIN CABLE
130A	EVAP. FAN MAIN CABLE
131	WORLD TRANSM-D SOL.
132	WORLD TRANSM-ENGINE BRAKE
133	GALLEY HEATING CONTAINER
133A	GALLEY HEATING CONTAINER
133B	GALLEY HEATING CONTAINER
133C	GALLEY HEATING CONTAINER
134	GALLEY HEATING CONTAINER
134A	GALLEY HEATING CONTAINER
135	GALLEY HEATING CONTAINER
135A	WORLD TR.-RES MODULE RET.
135B	A/C & HEAT SYS.-AIR SENSOR
135C	A/C & HEAT SYS.-AIR SENSOR
136	MICRO-WAVE OVEN SWITCH
136A	GALLEY LAMP

N0.	DESCRIPTI0N
136A	WORLD TRANSM-12V BATTERY
136A1	WORLD TRANSM-12V BATTERY
136A2	WORLD TRANSM-12V BATTERY
136AA	WORLD TRANSM-SHIFTER PWR
136V	WORLD TRANSM-12V BATTERY
136W	WORLD TRANSM-12V BATTERY
136X	WORLD TRANSM-12V BATTERY
137	WORLD TRANSM-RETARDER
137	RR VIEW MIRROR
137A	RR VIEW MIRROR
137B	RR VIEW MIRROR
137C	RR VIEW MIRROR
137D	RR VIEW MIRROR
137E	RR VIEW MIRROR
137F	RR VIEW MIRROR
137H	RR VIEW MIRROR
137J	RR VIEW MIRROR
137K	RR VIEW MIRROR
137L	RR VIEW MIRROR
137M	RR VIEW MIRROR FEED
137R	WORLD TRANSM-RETARDER
137T	MIRROR HEAT SW-JUMPER
138	WORLD TR.-RETARDER TEMP
138	ABS SYSTEM-SENSOR
138A	ABS SYSTEM-SENSOR
139	ABS SYSTEM-VALVE
139	WORLD TR.-OUTPUT SPEED HI
140	WORLD TR.-TURBINE SPEED LO
140	ABS SYSTEM-VALVE
141	ABS SYSTEM-VALVE
141	WORLD TR.-ENGINE SPEED HI
142	ABS SYSTEM-VALVE
143	ABS SYSTEM-SENSOR
143A	ABS SYSTEM-SENSOR
143A	WORLD TRANS-BATERY GRD
143W	WORLD TRANSM-BATTERY GRD
143X	WORLD TRANSM-BATTERY GRD
143Y	WORLD TRANSM.BATT.GRD
143W	FROM GROUND STUD
144	ABS SYSTEM-SENSOR
144A	ABS SYSTEM-SENSOR
145	ABS SYSTEM
146	ABS SYSTEM
146A	WORLD TRANSM-12V IGNITION
146AA	WORLD TRANSM-DIAGN.CONN.
147	WORLD TRANSM-OIL TEMP
147	ABS SYSTEM-VALVE
147A	ETHER COLD START
147C	ETHER COLD START
148	ABS SYSTEM-VALVE

CIRCUIT NUMBER C0DE

N0.	DESCRIPTI0N
148	WORLD TR.-OUTPUT SPEED LO
149	WORLD TR.-TURBINE SPEED HI
149	ABS SYSTEM-SENSOR
149A	ABS SYSTEM
150	WORLD TR.-ENGINE SPEED LO
150	DDEC -ECM BATTERY GRD
150A	DDEC -ECM BATTERY GRD
151	DDEC -ECM BATTERY GRD
151	ATC VALVE
152	ATC VALVE
153	ELECTRICAL DRIVER'S SEAT
154	WORLD TRANSM-ABS INPUT (-)
156A	ABS SYSTEM-FEED
157B	ABS SYSTEM
159	WORLD TRANSM-DIAGNOSTIC
160	ALARM & SIGN.-TAG PRESS SW
161B	WORLD TRANSM-SIGNALGRD
162	WORLD TRANSM-PRESS. SW C3
163	WORLD TR.-RETARDER ENABLE
164	WORLD TR.-RET. ACTUAT. SIGN
165	WORLD TR.-OIL LEVEL SIGNAL
166	WORLD TRANSM. OUTPUT 7
167	W. TR.-OUT SPEED INTERLOCK
167Z	ZMTEC MODULE
169	WORLD TRANSM-PRE-SELECT #1
170	WORLD TRANSM-SHIFTER
170C	LUGGAGE DOOR LOCK-T.T.LT
170D	LUGGAGE DOOR LOCK-FEED
170E	LUG. DOOR LOCK-UNLOCK SIGN
170F	LUGGAGE DOOR LOCK-FEED
170G	LUGGAGE DOOR LOCK-FEED
170K	LUGGAGE DOOR-LOCK SIGN
170L	LUGG DOOR LOCK-SIGN T.T.LT
170N	LUGG DOOR LOCK-SIGN T.T.LT
170R	LUGG DOOR LOCK-SIGN. T.T.LT.
170S	LUGG DOOR LOCK-SIGN T.T.LT
170T	LUGG DOOR LOCK-SIGN T.T.LT
170V	LUGG DOOR LOCK-SIGN T.T.LT
170W	LUGGAGE DOOR LOCK-FEED
170X	LUGG DOOR LOCK-SIGN T.T.LT
170Y	LUGGAGE DOOR LOCK-FEED
170Z	LUGGAGE DOOR LOCK
171	WORLD TRANSM-SHIFTER
172	WORLD TRANSM-SHIFTER
173	WORLD TRANSM-SHIFTER
174	WORLD TRANSM-SHIFTER
175A	WORLD TRANSM-SHIFTER
176	WORLD TRANSM-SHIFTER

N0.	DESCRIPTI0N
180	OUTSIDE TEMP. DISPLAY
180A	OUTSIDE TEMP. DISPLAY
180A	WORLD TRANSM-SHIFTER
180B	OUTSIDE TEMP. DISPLAY
180C	OUTSIDE TEMP. DISPLAY
181	FROZEN POINT T.T.LT
181A	TEMP. CTR'L INSIDE SENSOR
181B	TEMP. CTR'L INSIDE SENSOR
181C	THERMOMET. OUTSIDE SENSOR
181D	THERMOMET. OUTSIDE SENSOR
195	WORLD TRANSM-TRANS ID
197	FUEL WATER FILTER
197A	FUEL WATER FILTER
201	WORLD TRANSM-SPARE
202	WORLD TRANSM-SPARE
203	WORLD TRANSM-SPARE
204	WORLD TRANSM-SPARE
214	WORLD TR.-BACK-UP SIGNAL
231	WORLD TR.-NEUTRAL SIGN GRD
231F	WORLD TR.-NEUTRAL SIGN GRD
231W	W.TR.-NEUTRAL SIGN GRD WCL
231Z	ZF NEUTRAL SIGNAL GRD
240	DDEC -ECM 12V FEEDING
241	DDEC -ECM 12V FEEDING
253	24V SIGNAL GALLEY INVERTER
254	GALLEY REFRIGERATOR
254A	GALLEY REFRIGERATOR
254F	GALLEY REFRIGERATOR
255	GALLEY COFFEEMAKER
255A	GALLEY COFFEEMAKER
255B	GALLEY COFFEEMAKER
260	WINDOW AJAR-T.T.LT
290	FAN CLUTCH RADIATOR-FEED
290A	FAN CLUTCH RADIATOR-FEED
291	FAN CLUTCH RADIATOR SPD 1
292	FAN CLUTCH RADIATOR SPD 2
292J	FAN OVERRIDE LTS SWITCH
300	WCL POWER SYS. & ACCESS.
300A	WCL POWER SYSTEM SW.
301J	WCL POWER SW. JUMPER LED
301	WCL SIGNAL POWER SW.
302	WCL DOOR AJAR TTLT& ALARM
303	WCL FR RH FLASHER
303A	WCL FR RH FLASHER
304	WCL DOOR TOP LT.
305	WCL PARKING BRAKE SOL. VALVE

N0.	DESCRIPTI0N
305A	WCL DOOR OPEN SIGNAL
305B	WCL DOOR TOP LT.
306	WCL CONTROL SYSTEM
307	WCL CONTROL SYSTEM
308	WCL CONTROL SYSTEM
309	WCL CONTROL SYSTEM
417	DDEC-LIMIT SPEED GOVERNOR
419	DDEC -CHEK ENGINE LIGHT
439	DDEC-12V IGNITION
451	DDEC-A/C FAN CLUTCH
499	DDEC-OUTPUT PWR SHUTDOWN
505	DDEC-TACHOMETER DRIVE
509	DDEC-STOP ENGINE LIGHT
510	DDEC-FAST IDLE SIGNAL
524	DDEC-ENGINE BRAKEDISABLE
524B	ZF SIGNAL–AUX.SENS.THROTTLE
525	DDEC-FAST IDLE SIGNAL
528	DDEC-STOP ENG. OVERRIDE
531	DDEC-CRUISE CLUTCH CUT OUT
540	DDEC-CRUISE ENABLE T.T.LT
541	DDEC-CRUISE SET SW
542	INPUT PARK BRAKE INTERLOCK
543	DDEC-CRUISE BRAKE PEDAL
544	DDEC-CRUISE ON/OFF SW
545	DDEC-CRUISE RESUME SW
555	DDEC-FAN CLUTCH SPEED#1
556	DDEC-VEHICULE SPEED (+)
557	DDEC-VEHICULE SPEED (-)
563	DDEC-FAN CLUTCH SPEED#2
564	DDEC-DIGTAL OUTPUT
564B	DDEC-DIGTAL OUTPUT
565	DDEC-ENGINE BRAKE ACTIVE
565Z	DECELERATION LTS
583	DDEC-ENGINE BRAKE 4 CYL.
700	J1587(+)
701	J1587(-)
705	ZF SIGNALS
706	ZF SIGNALS
707	ZF SIGNALS
717	ZF SIGNALS
718	ZF SIGNALS
719	ZF SIGNALS
720	ZF SIGNALS
740	EASY START VALVE
761	ZF SIGNALS
900	DDEC-DATA LINK (+)
901	DDEC-DATA LINK (-)
908	DDEC-HYDRAU. PWM#1 OUTPUT

N0.	DESCRIPTI0N
916	DDEC-SENSOR SUPPLY (5VDC)
925	J1939(+)
926	J1939(-)
927	J1939(SHIELD)
952	DDEC-SENSOR RETURN#1
953	DDEC-SENSOR RETURN#2
979	DDEC-ENGINE BRAKE 2 CYL.
2123	FLASHER SIGNAL LTS

CIRCUIT NUMBER C0DE

N0.	DESCRIPTI0N
A1	RADIO SYSTEM
A2	RADIO SYSTEM
A3	AUDIO AMPLI
A8	VIDEO SYSTEM
A9	RADIO SYSTEM
A10	AUDIO AMPLI
A11	AUDIO AMPLI
A12	AUDIO AMPLI
A13	AUDIO AMPLI
A15	AUDIO AMPLI
A16	VIDEO SYSTEM
B1	MICROPHONE
B2	MICROPHONE
B3	MICROPHONE
B4	MICROPHONE
B5	MICROPHONE
B6	MICROPHONE
B7	MICROPHONE
B8	MICROPHONE
B10	MICROPHONE
B11	MICROPHONE
B12	MICROPHONE
B1A	FLUORESCENT BALLAST
B1B	FLUORESCENT BALLAST
B2A	FLUORESCENT BALLAST
B2B	FLUORESCENT BALLAST
B3A	FLUORESCENT BALLAST
B3B	FLUORESCENT BALLAST
B4A	FLUORESCENT BALLAST
B4B	FLUORESCENT BALLAST
B5A	FLUORESCENT BALLAST
B5B	FLUORESCENT BALLAST
B6A	FLUORESCENT BALLAST
B6B	FLUORESCENT BALLAST
B7A	FLUORESCENT BALLAST
B7B	FLUORESCENT BALLAST
B14	RADIO SYSTEM
B15	RADIO SYSTEM
C2	RADIO SYSTEM
C3	CONTROL HEAD ANTENNA
C5	VIDEO SYSTEM
C6	CONTROL HEAD DIMMER
C7	RADIO SYSTEM
C8	AUDIO AMPLI
C9	VIDEO SYSTEM
C10	VIDEO SYSTEM
C11	VIDEO SYSTEM
C12	VIDEO SYSTEM
C13	VIDEO SYSTEM
C14	VIDEO SYSTEM

N0.	DESCRIPTI0N
C15	AUDIO AMPLI
D1	PASSENGER SPEAKER
D2	PASSENGER SPEAKER
D3	PASSENGER SPEAKER
D4	PASSENGER SPEAKER
D4S	PASSENGER SPEAKER
D5	PASSENGER SPEAKER
D6	PASSENGER SPEAKER
D7	PASSENGER SPEAKER
D8	PASSENGER SPEAKER
DR1	DRIVER'S SPEAKER
DR2	DRIVER'S SPEAKER
DR3	DRIVER'S SPEAKER
DR4	DRIVER'S SPEAKER
G1	PASSENGER SPEAKER
G2	PASSENGER SPEAKER
G3	PASSENGER SPEAKER
G4	PASSENGER SPEAKER
G5	PASSENGER SPEAKER
G6	PASSENGER SPEAKER
G7	PASSENGER SPEAKER
G8	PASSENGER SPEAKER
G8S	PASSENGER SPEAKER
IPJ1	CLUSTER – BULB TEST POS
IPJ2	CLUSTER – BULB TEST NEG.
IPJ5	CLUSTER – FUEL GAUGE
IPJ6	CLUSTER – BULB TEST POS.
IPJ7	CLUSTER – BULB TEST NEG.
IPJ8	CLUSTER – MASTER WARNING
L8	WATER TANK HEATER
L9	WATER TANK HEATER
LX5	CLUSTER – COMPUTER MODE
LX6	CLUSTER – COMPUTER DOWN
LX7	CLUSTER – COMPUTER SET
LX16	CLUSTER – COMPUTER UP
LX21	CLUSTER – COMPUTER COM.
R1A	FLUORESCENT BALLAST
R1B	FLUORESCENT BALLAST
RT	T.T.L.T. MODULE – TEST SW.
SPK1	PASSENGER SPEAKER
SPK2	PASSENGER SPEAKER
SPK3	PASSENGER SPEAKER
SPK4	PASSENGER SPEAKER
SP1	SPARE WIRE
SP2	SPARE WIRE
SP3	SPARE WIRE
SP4	SPARE WIRE
SP5	SPARE WIRE
SP6	SPARE WIRE
SP7	SPARE WIRE

N0.	DESCRIPTI0N
SP8	SPARE WIRE
SP9	SPARE WIRE
SP10	SPARE WIRE
SP11	SPARE WIRE
SP12	SPARE WIRE
SP13	SPARE WIRE
SP14	SPARE WIRE
SP15	SPARE WIRE
SP16	SPARE WIRE
SP17	SPARE WIRE
SP18	SPARE WIRE
SP19	SPARE WIRE
SP20	SPARE WIRE
SP21	SPARE WIRE
SP23	SPARE WIRE
SP24	SPARE WIRE
SP25	SPARE WIRE
SP26	SPARE WIRE
SP27	SPARE WIRE
SP28	SPARE WIRE
SP30	SPARE WIRE
SP33	SPARE WIRE
SP34	SPARE WIRE
SP35	SPARE WIRE
SP36	SPARE WIRE
SP37	SPARE WIRE
SP38	SPARE WIRE
SP40	SPARE WIRE
SP41	SPARE WIRE
SP42	SPARE WIRE
SP43	SPARE WIRE
SP44	SPARE WIRE
SP45	SPARE WIRE
SP48	SPARE WIRE
SP50	SPARE WIRE
SP51	SPARE WIRE
SP52	SPARE WIRE
SP53	SPARE WIRE
SP54	SPARE WIRE
SP55	SPARE WIRE
SP56	SPARE WIRE
SP57	SPARE WIRE
SP60	SPARE WIRE
SP61	SPARE WIRE
SP62	SPARE WIRE
SP63	SPARE WIRE
SP64	SPARE WIRE
SP65	SPARE WIRE
SP66	SPARE WIRE
SP67	SPARE WIRE

N0.	DESCRIPTI0N
SP69	SPARE WIRE
SP70	SPARE WIRE
SP71	SPARE WIRE
SP72	SPARE WIRE
SP74	SPARE WIRE
SP75	SPARE WIRE
SP76	SPARE WIRE
SP77	SPARE WIRE
SP78	SPARE WIRE
SP80	SPARE WIRE
SP81	SPARE WIRE
SP82	SPARE WIRE
SP83	SPARE WIRE
SP84	SPARE WIRE
SP85	SPARE WIRE
SPZ1	SPARE WIRE-ZF TRANSM.
SPZ2	SPARE WIRE-ZF TRANSM.
SPZ3	SPARE WIRE-ZF TRANSM.
SPZ4	SPARE WIRE-ZF TRANSM.
SPZ5	SPARE WIRE-ZF TRANSM.
SPZ6	SPARE WIRE-ZF TRANSM.
TW1	TWISTED SPARE
TW2	TWISTED SPARE
W1	STEERING BOX CONVERTER
W2	STEERING BOX CONVERTER
Y1A	FLUORESCENT BALLAST
Y1B	FLUORESCENT BALLAST
Y2A	FLUORESCENT BALLAST
Y2B	FLUORESCENT BALLAST
Y3A	FLUORESCENT BALLAST
Y3B	FLUORESCENT BALLAST
Y4A	FLUORESCENT BALLAST
Y4B	FLUORESCENT BALLAST
Y5A	FLUORESCENT BALLAST
Y5B	FLUORESCENT BALLAST
Y6A	FLUORESCENT BALLAST
Y6B	FLUORESCENT BALLAST
Y7A	FLUORESCENT BALLAST
Y7B	FLUORESCENT BALLAST
0	BATTERY – MAIN GROUND
0	EVAP. COMPT. GROUND
0	RJB – INSIDE GRD
0	WCL MODULE
0	INVERTER CUT OFF RELAY
0A	LAVATORY ACCESSORIES
0A	EVAP. FAN GROUND
0A	FR. ROOF ACC. GRD
0B	BOOSTER BLOCK GROUND
0B	A/C – CONDENSER GRD
0B	24V&12V CUT OUT REL.COIL

CIRCUIT NUMBER C0DE

N0.	DESCRIPTI0N
0BE	OV BATTERY MONITOR
0C	R.J.B. - GRB
0C	MOTOR STARTER GROUND
0C	F.R. SERV. CPT- ACC.
0C1	ENTRACE DOOR SEDAN
0C2	STEERING CONTROL GROUND
0C3	SOUND SYSTEM RELAY
0C4	F.J.B. GRD
0CJ	CRUISE SW. JUMPER
0D	FLUORESCENT GRD
0D	COND FAN GRD
0E	BATT. COMPT. LTS GROUND
0E	READING LIGHTS GROUND
0F	FLUORESCENT GRD
0F	PRO-DRIVER GROUND
0G	READING LIGHTS GROUND
0H	ENG. CPT. – ACC. GRD
0IN	INTERCOM SYSTEM
0J	PARCEL RACK A/C UNIT
0K	PARCEL RACK A/C UNIT
0L	ENG.CPT –CLEAR.LTS RR ROOF
0L	R.J.B. - GRD
0L	FR – SIDE MARK. & FLASH GRD
0L1	ENG.CPT–SIDE MARK. & FL. GRD
0L2	HEAD LTS GROUND
0L3	FR.SERV.DR. & ENT.DOOR GRD
0L4	FOG LTS RESISTOR GRD
0L5	LH CONSOL – ACC. GRD
0L5	W.C.L.DOOR
0L6	MARKER&FLASH. GROUND
0L7	AISLE LIGHTS GROUND
0L8	DOCKING LTS
0LV	WINDSHIELD WASHER LEVEL
0M	WIPER 2 MIRROR MOTOR
0M3	DEFROST GRD
0M4	HORN & DR'S WINDOW LIFTER
0M5	SUN VISOR MOTOR
0M6	UPPER FAN DEFROST
0M7	DR'S WIND.LIFT. & RH MIR. SW
0M7A	LH MIRROR SW.
0P	ENG.CDT – PRE-HEATER
0P1	A/C COMPRESSOR GRD
0R	SOUND SYSTEM RELAY GROUND
0SA	BOSCH ALTERNATOR GROUND
0SA	PARCEL RACK LTS SWITCH
0SB	PARCEL RACK LTS SWITCH
0SC	PARCEL RACK LTS SWITCH
0SE	PARCEL RACK LTS SWITCH

N0.	DESCRIPTI0N
0SF	PARCEL RACK LTS SWITCH
0SG	PARCEL RACK LTS SWITCH
0SH	PARCEL RACK LTS SWITCH
0SJ	PARCEL RACK LTS SWITCH
0SS	SOUND SYSTEM GROUND
00SS	SOUND SYSTEM GROUND
0S2	RADIO GROUND
0S3	VIDEO GROUND
0S3A	VIDEO GROUND
0S3B	VIDEO GROUND
0S3C	VIDEO GROUND
0S3D	VIDEO GROUND
0S3E	VIDEO GROUND
0T	LAVATORY FAN & PUMP
0T	SPEED SW. CONNECTOR
0T1	DASH ACC. GROUND
0T2	CLUSTER ACC. GROUND
0T2	WINDOW AWNING
0T3	ALTERNATOR MODULE
0T4	12V OUTLET – CTR MODULE
0T5	FS.HVAC DASH MODULE. GND
0T6	FS-DDR GROUND
0VA	BATTERY EQUALIZER GROUND
0W	FJB – TRANSM. RLY GRD
0W	SHIFT SELECTOR GROUND
0W	WCL MODULE
0WA	WCL DOOR AJAR
0WC	WCL BATTERY CPT. ACCES.
0WL	WCL SIGNAL DOOR AJAR ALARM
0Y1	ABS SYSTEM-GRD
0Y2	ABS SYSTEM-GRD
0Y3	ABS SYSTEM-GRD
0Y4	ABS SYSTEM-GRD
0Y5	ABS SYSTEM-GRD
0Y6	ABS SYSTEM-GRD
0Z1	ZF TRANSM. GRD
0Z2	ZF TRANSM. GRD
00A	ELECTRONIC TERMINAL GROUND
00F	FRONT ELECTRONIC GROUND
2B	A/C & HEAT SYSTEM
2D	A/C & HEAT SYSTEM
2DD	A/C & HEAT SYSTEM
2E	A/C & HEAT SYSTEM
2EE	A/C & HEAT SYSTEM
2F	A/C & HEAT SYS.-EVAP. SPEED
2H	A/C & HEAT SYS–LO-PRESS SW.
2L	A/C & HEAT SYS–HI-PRESS SW.
4A	HOTESS CHIME MAIN SWITCH

N0.	DESCRIPTI0N
4C	HOTESS CHIME P. RACK SW.
5	AISLE LTS FEEDING
5N	EMERGENCY LTS
5N0	SPEED SIGNAL HIGHER 5MPH
5NC	SPEED SIGNAL LOWER 5MPH
6	AISLE LTS
7B	ENTRANCE DOOR FEED.-24V HW
9	INTERIOR LTS-ENGINE CPT
9F	INTERIOR LTS – FR-SERV. CPT
10	INTERIOR LTS-LUGGAGE CPT
10	INTERIOR LTS-FR SERV. CPT
10A	INTERIOR LTS-LUGGAGE CPT
10A	AUX. COMPRESSOR CLUTCH
10B	INTERIOR LTS-LUGGAGE CPT
10C	INTERIOR LTS-LUGGAGE CPT
10E	INTERIOR LTS-BATTERY CPT
10H	AUX. COMPRESSOR CLUTCH
10L	AUX. COMPRESSOR CLUTCH
10X	AUX. COMPRESSOR CLUTCH
11	DESTINATION SIGN
11A	DESTINATION SIGN
11B	DESTINATION SIGN
11C	DESTINATION SIGN
11D	DESTINATION SIGN
11E	DESTINATION SIGN
11K	DESTINATION SIGN
11J	DESTINATION SIGN
11P	DESTINATION SIGN
12	12V ELECTRONIC TERMINAL
12A	FR JCT PANEL 12V DISC SW
12A	BATT. JCT PANEL 12V DISC SW
12B	FR JCT PANEL 12V DISC SW
12BE	12V BATTERY MONITOR
12C	FR JCT PANEL 12V DISC SW
12C	RR JCT BOX 12V DISC SW
12D	BATT. JCT PANEL 12V HOT WIRE
12D	FR JCT PANEL 12V HOT WIRE
12D	RR JCT PANEL 12V HOT WIRE
12DD	FR JCT PANEL 12V HOT WIRE
12DDR	FR JCT BOX 12V HOT DDR CONN
12DT	T.T. LT MODULE
12DZ	ZF TRANSM. 12V HOT WIRE
12E	FR JCT PANEL 12V DISC SW
12F	RR JCT PANEL 12V DISC SW
12F1	FR JCT PANEL 12V DISC SW
12F2	FR JCT PANEL 12V DISC SW
12FL	RR JCT PANEL 12V DISC SW
12FT	RR JCT PANEL 12V DISC SW
12G	FR JCT PANEL 12V DISC SW

N0.	DESCRIPTI0N
12H	12V IGN. DASH ACCESS.
12I	RR JCT BOX 12V IGNITION
12I	FR JCT PANEL 12V IGNITION
12IA	FR JCT PANEL 12V IGNITION
12IA	RR JCT PANEL 12V IGNITION
12IB	FR JCT PANEL 12V IGNITION
12IB	STEERING BOX ECU FEEDING
12IE	ABS-FR JCT PANEL 12V IGN.
12IZ	ZF TRANSM. IGNITION
12IN	12 VOLTS DISC.SW. INTERCOM
12J	FR JCT PANEL 12V DISC.SW.
12K	FR JCT PANEL 12V DISC.SW.
12L	CORNERING LTS FEEDING
12LX	CLUSTER 12V HOT WIRE
12M	ABS-FR JCT PNL 12V DISC.SW
12P	12V BATTERY JCT BLOCK
12R	12V MEMORY RADIO
12P	12V POWER OUTLET
12SB	12V SOUND SYSTEM FEEDING
12SS	12V SOUND SYSTEM FEEDING
12S	12V RADIO FEEDING
12S1	12V RADIO FEEDING
12S1A	12V DVD KARAOKE FEEDING
12S2	12V RADIO FEEDING
12S2A	12V DVD KARAOKE FEEDING
12T	RR JCT BOX 12V DISC SW
12VA	12V BATTERY EQUALIZER
12VB	FR JCT PANEL 12V DISC SW
12VD	12V HOT WIRE DISTRIBUTION
12VE	FR JCT PANEL 12V DISC SW
12VF	12 VOLTS FRONT DISTRIBUTIUON
12VG	RR JCT PANEL 12V DISC SW
12VI	12V IGNITION DISTRIBUTION
12VO	12V BATTERY EQUALIZER
12VR	12V REAR DISTRIBUTION
12W	12V HOT WIRE DDEC FEEDING
12WA	ENTRANCE DOOR SYSTEM
12WR	WCL DOOR TOP LT
14	LAVATORY PUMP
14A	LAVATORY PUMP- P.BUTTON
14P	LAVATORY PUMP
15	WIPER & WASHER FEEDING
16	SPEEDOMETER (+)
16T	SPEED SW SIGNAL IN (+)
17	EXTERIOR LTS-FLASHER UNIT
17A	EXTERIOR LTS-FLASHER UNIT
17C	JUMPER LTS SW. - HAZARD
18	UPPER FAN DEFROST
19	UPPER FAN DEFROST
20	SPEEDOMETER SIGNAL (-)

CIRCUIT NUMBER C0DE

N0.	DESCRIPTI0N
21	LEFT DIRECTIONNAL LTS
21A	LEFT DIRECTIONNAL LTS SIGN.
21B	HAZARD SWITCH SIGNAL
21BB	LEFT DIRECTIONNAL LTS FEED.
21H	EXTERIOR LTS-HAZARD SIGNAL
21M	AUX. LTS – DIRECTIONAL LH
22	AIR DRYER
23	RIGHT DIRECTIONNAL LTS
23A	RIGHT DIRECTIONNAL LTS SIGN.
23BB	RIGHT DIRECTIONNAL LTS FEED.
23H	EXTERIOR LTS-HAZARD SIGNAL
23K	RIGHT DIRECT. LTS W/KNELLING
23M	AUX LTS – DIRECTIONAL RH
24	24 VOLTS BATTERY DIST.
24	24 V. DISC. FRONT DIST.
24A	BATT. JCT PANEL 24V DISC SW
24A	24V BOOSTER BLOCK
24A	FR JCT PANEL 24V DISC. SW
24A	RR JCT PANEL 24V DISC. SW
24BE	BATTERY MONITOR
24C	FR JCT PANEL 24V DISC SW
24D	24 V. HOT WIRE FEEDING
24D	FR JCT BOX 24V HOT WIRE
24DD	FR JCT BOX 24V HOT WIRE
24DS	WIRELSS MICRO FEEDING
24DZ	ZF TRANSM. 24V HOT WIRE
24E	24 VOLTS POWER DISTRIBUTION
24E	RR JCT PANEL 24V DISC SW
24F	RR JCT PANEL 24V DISC SW
24G	FR JCT PANEL 24V DISC SW
24H	RR JCT PANEL 24V DISC SW
24I	FR JCT PANEL 24V IGNITION
24IA	RR JCT PANEL 24V IGNITION
24IA	FR JCT PANEL 24V IGNITION
24IB	FR JCT PANEL 24V IGNITION
24IF	FR JCT PANEL 24V IGNITION
24IZ	ZF TRANSM. IGNITION
24K	RR JCT PANEL 24V DISC SW
24L	RR JCT PANEL 24V DISC SW
24M	RR JCT PANEL 24V DISC SW
24P	FR JCT PANEL 24V DISC SW
24P2	RR BENCH- INVERTER
24PV	RR BENCH- INVERTER
24R	24V STARTER RELAY
24R	SCENIC VIEW SIGNAL ON
24SB	24V SOUND SYSTEM FEEDING

N0.	DESCRIPTI0N
24SS	24V SOUND SYSTEM FEEDING
24S1	AMPLIFIER FEEDING
24S1A	AMPLIFIER FEEDING
24S1B	AMPLIFIER FEEDING
24S1C	AMPLIFIER FEEDING
24S1D	AMPLIFIER FEEDING
24S1E	AMPLIFIER FEEDING
24S2	AMPLIFIER FEEDING
24S3	VIDEO FEEDING
24S3A	VIDEO FEEDING
24S3B	VIDEO FEEDING
24S3C	VIDEO FEEDING
24S3D	VIDEO FEEDING
24S3E	VIDEO FEEDING
24S3F	VIDEO FEEDING
24S3G	VIDEO FEEDING
24S3H	VIDEO FEEDING
24S3I	VIDEO FEEDING
24S3J	VIDEO FEEDING
24S4	VIDEO FEEDING
24T	RR JCT PANEL 24V DISC SW
24VA	24 VOLTS BATTERY EQUALIZER
24VD	24V HOT WIRE FEED
24VF	24 VOLTS FRONT DISTRIBUTION
24VI	24 VOLTS IGNITION REAR DIST.
24VR	24 VOLTS REAR DISTRIBUTION
24Y	24 VOLTS POWER GALLEY
24WC	WCL PUMP FEEDING
24WL	WCL PUMP FEEDING
24WR	WCL POWER ACCES.
25	EITHER ALTERNAT. RUN SIGNAL
25A	TT.LT. ALTERNATOR #1
25A1	BOSCH ALTERNATOR SIGNAL D+
25A2	BOSCH ALTERNATOR SIGNAL D+
25B	EXT. LTS-DAYTIME RUN LTS
25D	BOTH ALTERNATOR RUN SIGNAL
25K	T.T LT. ALTERNATOR #2
26	DR'S & ENT. WINDOW LIFTER
26A	CIGAR LIGHT. & POW.OUTLET LH
26B	DRIVER'S WINDOW LIFTER
26C	DRIVER'S WINDOW LIFTER
27	LAVATORY ALARM
28H	T.T.LT MODULE – HI A/C PRES.
28T	T.T.LT MODULE – LO A/C PRES.
29	A/C & HEAT SYS.-DR'S HTR

N0.	DESCRIPTI0N
29H	HVAC DASH MODILE
30A	GALLEY SWITCH SIGNAL
30J	GALLEY SWITCH LED
31B	WIPER & WASHER SYSTEM
32	EXTERIOR LTS-BACK-UP
32B	EXTERIOR LTS-BACK-UP
35	ENTRANCE STEP LIGHTS
36	ENGINE BRAKE SYSTEM
36A	ENGINE BRAKE SYSTEM & RET.
37	LAVATORY LTS FEEDING
38	FLUORESCENT RELAY FEEDING
38A	R.H FLUORESCENT
38B	L.H. FLUORESCENT
38C	FLUORESCENT FEEDING
39	INTERIOR LTS-DRIVER'S LTS
39D	INTERIOR LTS – DRIVER' LTS
41	A/C SYS.-COND FAN MOTOR
41A	A/C SYS.-COND FAN MOTOR
41B	A/C SYS.-COND FAN MOTOR
42	A/C SYS.-COND FAN MOTOR
42A	A/C SYS.-COND FAN MOTOR
43	PARCEL RACK A/C
43A	PARCEL RACK A/C
43B	PARCEL RACK A/C
43C	PARCEL RACK A/C
43D	PARCEL RACK A/C
43E	PARCEL RACK A/C
43F	PARCEL RACK A/C
43G	PARCEL RACK A/C
43M	PARCEL RACK A/C
43X	PARCEL RACK A/C
44	EXTERIOR LTS-FOG
44A	EXTERIOR LTS-FOG
44B	EXTERIOR LTS-FOG
44C	FOG,LTS & HVAC FEEDING
44D	EXTERIOR LTS - FOG
44E	EXTERNAL LTS - FOG
45A	A/C & HEAT SYSTEM FULL AIR
45B	A/C & HEAT SYS.-WATER PUMP
45C	A/C & HEAT SYS.-WATER VALV
45D	A/C & HEAT SYS.-WATER VALV
45G	A/C & HEAT SYS.-DR'S HTR
45H	A/C & HEAT SYS.-EVAP. SPEED
46	EXTERIOR LTS-MARKER
46A	EXTERIOR LTS-AUX LTS RESIS.
46C	EXTERIOR LTS-MARKER
46D	EXTERIOR LTS-AUX LTS RESIS.
48	ENTRANCE DOOR OPEN SIGNAL
48A	ENTRANCE DOOR OPEN SOL.

N0.	DESCRIPTI0N
48B	ENTRANCE DOOR OPEN SIGNAL
48C	ENTRANCE DOOR SYSTEM
48D	ENTRANCE DOOR SYSTEM
48W	ENTRANCE DOOR SEDAN
49	ÈNTRANCE DOOR CLOSE SIGNAL
49A	ENTRANCE DOOR SYSTEM
49B	ENTRANCE DOOR SYSTEM
50	AD-9 AIR DRYER
52	ALARM & SIGNAL-ELEC.HORN
52A	ALARM & SIGNAL-ELEC.HORN
52B	PNEUMATIC HORN
53	ALARM & SIGNAL-ELEC.HORN
53B	WIPER & WASHER SYSTEM
53C	WIPER & WASHER SYSTEM
53E	WIPER & WASHER SYSTEM
53J	WIPER & WASHER SYSTEM
55	EXTERIOR LTS-HI BEAM
57	EXTERIOR LTS-HI BEAM
57A	EXTERIOR LTS-HI BEAM
57B	A/C & HEAT SYS.-WATER PUMP
57C	A/C & HEAT SYS.-WATER PUMP
57E	A/C & HEAT SYS.-WATER VALV
57W	PRE-HEAT WATER HEATER
58	EXTERIOR LTS-LO BEAM
58A	EXTERIOR LTS-LO BEAM
58B	EXTERIOR LTS-LO BEAM
59A	ENGINE BRAKE SYSTEM
61	EXTERIOR LTS-24V FEED SW
61A	EXTERIOR LTS-HEAD SIGNAL
62	LAVATORY INDICATOR
63	EXTERIOR LTS-CLEAR. FEED
63B	EXTERIOR LTS-CLEARANCE
63C	EXT. LTS-MARKER SIGNAL
63D	BLINKER RELAY
63E	BLINKER RELAY
63F	EXT. LTS-MARKER BLINKER
64	DRIVER'S FAN SPEED CTR
64A	A/C SPARE
64B	A/C SPARE
65	FOOT DAMPER MOTOR
65A	FOOT DAMPER MOTOR
65D	DRIVER'S REC. DAMPER
65E	DRIVER'S REC. DAMPER L.H.
65F	DRIVER'S REC. DAMPER L.H.
66	A/C PASSENGER – ON/OFF
67A	A/C & HEAT SYSTEM
68	DASH & DEFROST DAMPER MOT
68A	DASH & DEFROST DAMPER MOT
69	DAMPER MIX LIMIT SWITCH

CIRCUIT NUMBER C0DE

N0.	DESCRIPTI0N
70	HAT RACK & NIGHT LTS FEEDING
72	SUN VISOR - FEED
72A	SUN VISOR RH
72B	SUN VISOR RH
72C	SUN VISOR LH
72D	SUN VISOR LH
74	R.H. READING LAMP FEEDING
74A	R.H. HOTESS CHIME FEEDING
74B	WCL R.H. READING LAMP FEED.
74D	READING LAMP SWITCH
74J	READING LAMP INDICATOR SW.
75	L.H. READING LAMP FEEDING
75A	L.H. HOTESS CHIME FEEDING
76	FUEL TANK GAUGE
76C	LOW FUEL T.T.LT
76M	FUEL PRIME PUMP
76P	FUEL PRIME PUMP FEEDING
77B	A/C SYS. – LIQ. SOL. VALVE
77C	A/C & HEAT SYS.-COMPRESSOR
77H	A/C SYS.-LIQ. SOL. VALVE
81	EXTERIOR LTS-STOP SW
82	EXTERIOR LTS-STOP SIGNAL
82A	EXTERIOR LTS-STOP SIGNAL
82B	EXTERIOR LTS-STOP LTS
82C	EXTERIOR LTS-STOP LTS
82L	EXT. LTS-STOP LTS & CYCLOP
82R	EXTERIOR LTS-STOP LTS
83	ENG. CTR-MAST. KEY SW ACC.
83A	24V&12V CUT RELAY COIL
83B	24V&12V CUT RELAY COIL
84	ENG. CTR-MAST KEY SW START
84A	ENG. CTR-MAST KEY SW START
84J	ENG. CTR-MAST KEY SW START
85	24V IGNITION SIGNAL
85A	24V IGN DASH INSTRUMENT.
85C	24V IGNITION - FEED
85F	RAD. FAN CONTROL W/RETARD
85W	OUT SPEED INTERLOCK–24V IGN.
85X	ABS-24V IGN
85Y	ABS-WARNING LT
86	ENG. CTR-STARTER SOL.
86A	ENG. CTR-STARTER RELAY COIL
86F	TELL TALE STARTER ON
86T	TELL TALE STARTER ON
87B	ENGINE CTR-24V IGNITION
88	ENGINE CTR-RR START SIGNAL

N0.	DESCRIPTI0N
89	ENGINE CTR-RR START SIGNAL
90	DASH MAGNETIC SWITCH
90B	ENG. CTR-MAST KEY SW FEED
91	PARKING BRAKE SW SIGNAL
91A	DDEC -FAST IDLE SIGNAL
91B	D.R.L. CANCEL RELAY
91C	PARKING BRAKE – T.T.LT
91J	FAST IDLE – JUMPER SW.
91W	WCL PARKING BRAKE SIGNAL
92	BATT. EQUAL.-CHECK BALANCE
93	BATT. EQUALIZ.-CHECK LO/HI
95A	ENG. BRAKE & RETARDER SYS.
95B	ENG. BRAKE & RETARDER SYS.
98A	TRAIL PARK BRAKE PRESS SW
98B	TRAIL BRAKE PRESS SW
100	INTERIOR LTS RELAY COIL
100	INDIRECT LTS FEEDING
100A	INDIRECT LTS RELAY COIL
100B	INDIRECT LTS FEEDING
100C	INDIRECT LTS FEEDING
101	24 VOLTS POWER STARTER
101	WORLD TR..– LO SIGN SOL.LO
102	24 VOLTS A/C DISTRIBUTION
102	WORLD TRANSM.–SOL. SUPPLY
102A	BOSCH ALTERNATOR FEEDING
103	WORLD TRANSM.- B.SOL.LO
103	LOW BUOY SYSTEM
104	WORLD TR. –G SOL.
105W	WORLD TR-SOL.–RET.OIL TT.LT
107	WORLD TR. - SOL. SUPPLY
110	WORLD TR.-F SOL. LO
112	WORLD TR.-SPARE OUTPUT (+)
113W	WORLD TR.-REVERSE WARNING
113Z	ZF TRANSM.- REVERSE
114	INTERIOR LT-DASH LT RHEOS.
114A	INTERIOR LT-DASH LT RHEOS.
114B	INT. LT-DASH LT RHEOST.FEED
115	DDEC -COOLANT LEVEL
115W	TRANSM.-DO NOT SHIFT SIGN
115W	ZF -CHECK TRANSM. TTLT
116	WORLD TR.-SOL. SUPPLY
116B	A/C & HEAT SYSTEM-DR'S HTR
116C	A/C SYS.–TRIG. DEFROST
119	WORLD TRANSM-ENGINE BRAKE
120	WORLD TRANSM-A SOL.
121	WORLD TRANSM-SOL.SUPPLY
123	WORLD TR.-NEUTRAL START
123A	ALARM & SIGNAL-FIRE

N0.	DESCRIPTI0N
	DETECT.
123B	ALARM & SIGNAL-FIRE DETECT.
124	WORLD TR.-SENSOR POWER
124A	WORLD TRANSM-SENSOR PWR
125	LAVATORY FAN
125	WORLD TR-RETARDER INDICAT.
125W	WORLD TR-RETARDER INDICAT.
126	24 V IGN. SPEED SWITCH
126A	KNEELING SYSTEM
126AA	KNEELING SYSTEM
126B	HI-BUOY SIGNAL
126C	KNEELING SYSTEM
126D	KNEELING SYSTEM
126F	KNEELING SYSTEM
126G	KNEELING SYSTEM
126H	SPEED SIGN 5NC – 24V
126K	KNEELING SYSTEM
126L	KNEELING SYSTEM
126P	KNEELING SYSTEM
126R	KNEELING SYSTEM
126S	KNEELING SYSTEM
126T	KNEELING SYSTEM
126W	KNEELING SYSTEM
126W	WORLD TRANSM-NOT USED
127	WORLD TRANSM. – H SOL.
127	24HOT WIRE PREHEAT
127A	PRE-HEAT WATER HEATER
127B	PRE-HEAT WATER HEATER
127S	PRE-HEAT WATER HEATER
128	WORLD TRANSM-B SOL.
128A	PRE-HEAT WATER HEATER
128B	PRE-HEAT WATER HEATER
129	WORLD TRANSM-E SOL.
129	PRE-HEAT WATER HEATER
129B	PRE-HEAT WATER HEATER
130	WORLD TRANSM-SOL. SUPPLY
130	EVAP. FAN MAIN CABLE
130A	EVAP. FAN MAIN CABLE
131	WORLD TRANSM-D SOL.
132	WORLD TRANSM-ENGINE BRAKE
133	GALLEY HEATING CONTAINER
133A	GALLEY HEATING CONTAINER
133B	GALLEY HEATING CONTAINER
133C	GALLEY HEATING CONTAINER
134	GALLEY HEATING CONTAINER
134A	GALLEY HEATING CONTAINER
135	GALLEY HEATING CONTAINER
135A	WORLD TR.-RES MODULE RET.
135B	A/C & HEAT SYS.-AIR SENSOR

N0.	DESCRIPTI0N
135C	A/C & HEAT SYS.-AIR SENSOR
136	MICRO-WAVE OVEN SWITCH
136A	GALLEY LAMP
136A	WORLD TRANSM-12V BATTERY
136A1	WORLD TRANSM-12V BATTERY
136A2	WORLD TRANSM-12V BATTERY
136AA	WORLD TRANSM-SHIFTER PWR
136V	WORLD TRANSM-12V BATTERY
136W	WORLD TRANSM-12V BATTERY
136X	WORLD TRANSM-12V BATTERY
137	WORLD TRANSM-RETARDER
137	RR VIEW MIRROR
137A	RR VIEW MIRROR
137B	RR VIEW MIRROR
137C	RR VIEW MIRROR
137D	RR VIEW MIRROR
137E	RR VIEW MIRROR
137F	RR VIEW MIRROR
137H	RR VIEW MIRROR
137J	RR VIEW MIRROR
137K	RR VIEW MIRROR
137L	RR VIEW MIRROR
137M	RR VIEW MIRROR FEED
137R	WORLD TRANSM-RETARDER
137T	MIRROR HEAT SW-JUMPER
138	WORLD TR.-RETARDER TEMP
138	ABS SYSTEM-SENSOR
138A	ABS SYSTEM-SENSOR
139	ABS SYSTEM-VALVE
139	WORLD TR.-OUTPUT SPEED HI
140	WORLD TR.-TURBINE SPEED LO
140	ABS SYSTEM-VALVE
141	ABS SYSTEM-VALVE
141	WORLD TR.-ENGINE SPEED HI
142	ABS SYSTEM-VALVE
143	ABS SYSTEM-SENSOR
143A	ABS SYSTEM-SENSOR
143A	WORLD TRANS-BATERY GRD
143W	WORLD TRANSM-BATTERY GRD
143X	WORLD TRANSM-BATTERY GRD
143Y	WORLD TRANSM.BATT.GRD
143W	FROM GROUND STUD
144	ABS SYSTEM-SENSOR
144A	ABS SYSTEM-SENSOR
145	ABS SYSTEM
146	ABS SYSTEM
146A	WORLD TRANSM-12V IGNITION
146AA	WORLD TRANSM-DIAGN.CONN.
147	WORLD TRANSM-OIL TEMP
147	ABS SYSTEM-VALVE

CIRCUIT NUMBER C0DE

N0.	DESCRIPTI0N
147A	ETHER COLD START
147C	ETHER COLD START
148	ABS SYSTEM-VALVE
148	WORLD TR.-OUTPUT SPEED LO
149	WORLD TR.-TURBINE SPEED HI
149	ABS SYSTEM-SENSOR
149A	ABS SYSTEM
150	WORLD TR.-ENGINE SPEED LO
150	DDEC -ECM BATTERY GRD
150A	DDEC -ECM BATTERY GRD
151	DDEC -ECM BATTERY GRD
151	ATC VALVE
152	ATC VALVE
153	ELECTRICAL DRIVER'S SEAT
154	WORLD TRANSM-ABS INPUT (-)
156A	ABS SYSTEM-FEED
157B	ABS SYSTEM
159	WORLD TRANSM-DIAGNOSTIC
160	ALARM & SIGN.-TAG PRESS SW
161B	WORLD TRANSM-SIGNALGRD
162	WORLD TRANSM-PRESS. SW C3
163	WORLD TR.-RETARDER ENABLE
164	WORLD TR.-RET. ACTUAT. SIGN
165	WORLD TR.-OIL LEVEL SIGNAL
166	WORLD TRANSM. OUTPUT 7
167	W. TR.-OUT SPEED INTERLOCK
167Z	ZMTEC MODULE
169	WORLD TRANSM-PRE-SELECT #1
170	WORLD TRANSM-SHIFTER
170C	LUGGAGE DOOR LOCK-T.T.LT
170D	LUGGAGE DOOR LOCK-FEED
170E	LUG. DOOR LOCK-UNLOCK SIGN
170F	LUGGAGE DOOR LOCK-FEED
170G	LUGGAGE DOOR LOCK-FEED
170K	LUGGAGE DOOR-LOCK SIGN
170L	LUGG DOOR LOCK-SIGN T.T.LT
170N	LUGG DOOR LOCK-SIGN T.T.LT
170R	LUGG DOOR LOCK-SIGN. T.T.LT.
170S	LUGG DOOR LOCK-SIGN T.T.LT
170T	LUGG DOOR LOCK-SIGN T.T.LT
170V	LUGG DOOR LOCK-SIGN T.T.LT
170W	LUGGAGE DOOR LOCK-FEED
170X	LUGG DOOR LOCK-SIGN T.T.LT
170Y	LUGGAGE DOOR LOCK-FEED
170Z	LUGGAGE DOOR LOCK
171	WORLD TRANSM-SHIFTER
172	WORLD TRANSM-SHIFTER
173	WORLD TRANSM-SHIFTER

N0.	DESCRIPTI0N
174	WORLD TRANSM-SHIFTER
175A	WORLD TRANSM-SHIFTER
176	WORLD TRANSM-SHIFTER
180	OUTSIDE TEMP. DISPLAY
180A	OUTSIDE TEMP. DISPLAY
180A	WORLD TRANSM-SHIFTER
180B	OUTSIDE TEMP. DISPLAY
180C	OUTSIDE TEMP. DISPLAY
181	FROZEN POINT T.T.LT
181A	TEMP. CTR'L INSIDE SENSOR
181B	TEMP. CTR'L INSIDE SENSOR
181C	THERMOMET. OUTSIDE SENSOR
181D	THERMOMET. OUTSIDE SENSOR
195	WORLD TRANSM-TRANS ID
197	FUEL WATER FILTER
197A	FUEL WATER FILTER
201	WORLD TRANSM-SPARE
202	WORLD TRANSM-SPARE
203	WORLD TRANSM-SPARE
204	WORLD TRANSM-SPARE
214	WORLD TR.-BACK-UP SIGNAL
231	WORLD TR.-NEUTRAL SIGN GRD
231F	WORLD TR.-NEUTRAL SIGN GRD
231W	W.TR.-NEUTRAL SIGN GRD WCL
231Z	ZF NEUTRAL SIGNAL GRD
240	DDEC -ECM 12V FEEDING
241	DDEC -ECM 12V FEEDING
253	24V SIGNAL GALLEY INVERTER
254	GALLEY REFRIGERATOR
254A	GALLEY REFRIGERATOR
254F	GALLEY REFRIGERATOR
255	GALLEY COFFEEMAKER
255A	GALLEY COFFEEMAKER
255B	GALLEY COFFEEMAKER
260	WINDOW AJAR-T.T.LT
290	FAN CLUTCH RADIATOR-FEED
290A	FAN CLUTCH RADIATOR-FEED
291	FAN CLUTCH RADIATOR SPD 1
292	FAN CLUTCH RADIATOR SPD 2
292J	FAN OVERRIDE LTS SWITCH
300	WCL POWER SYS. & ACCESS.
300A	WCL POWER SYSTEM SW.
301J	WCL POWER SW. JUMPER LED
301	WCL SIGNAL POWER SW.
302	WCL DOOR AJAR TTLT& ALARM
303	WCL FR RH FLASHER

N0.	DESCRIPTI0N
303A	WCL FR RH FLASHER
304	WCL DOOR TOP LT.
305	WCL PARKING BRAKE SOL. VALVE
305A	WCL DOOR OPEN SIGNAL
305B	WCL DOOR TOP LT.
306	WCL CONTROL SYSTEM
307	WCL CONTROL SYSTEM
308	WCL CONTROL SYSTEM
309	WCL CONTROL SYSTEM
417	DDEC-LIMIT SPEED GOVERNOR
419	DDEC -CHEK ENGINE LIGHT
439	DDEC-12V IGNITION
451	DDEC-A/C FAN CLUTCH
499	DDEC-OUTPUT PWR SHUTDOWN
505	DDEC-TACHOMETER DRIVE
509	DDEC-STOP ENGINE LIGHT
510	DDEC-FAST IDLE SIGNAL
524	DDEC-ENGINE BRAKEDISABLE
524B	ZF SIGNAL–AUX.SENS.THROTTLE
525	DDEC-FAST IDLE SIGNAL
528	DDEC-STOP ENG. OVERRIDE
531	DDEC-CRUISE CLUTCH CUT OUT
540	DDEC-CRUISE ENABLE T.T.LT
541	DDEC-CRUISE SET SW
542	INPUT PARK BRAKE INTERLOCK
543	DDEC-CRUISE BRAKE PEDAL
544	DDEC-CRUISE ON/OFF SW
545	DDEC-CRUISE RESUME SW
555	DDEC-FAN CLUTCH SPEED#1
556	DDEC-VEHICULE SPEED (+)
557	DDEC-VEHICULE SPEED (-)
563	DDEC-FAN CLUTCH SPEED#2
564	DDEC-DIGTAL OUTPUT
564B	DDEC-DIGTAL OUTPUT
565	DDEC-ENGINE BRAKE ACTIVE
565Z	DECELERATION LTS
583	DDEC-ENGINE BRAKE 4 CYL.
700	J1587(+)
701	J1587(-)
705	ZF SIGNALS
706	ZF SIGNALS
707	ZF SIGNALS
717	ZF SIGNALS
718	ZF SIGNALS
719	ZF SIGNALS
720	ZF SIGNALS
740	EASY START VALVE
761	ZF SIGNALS
900	DDEC-DATA LINK (+)

N0.	DESCRIPTI0N
901	DDEC-DATA LINK (-)
908	DDEC-HYDRAU. PWM#1 OUTPUT
916	DDEC-SENSOR SUPPLY (5VDC)
925	J1939(+)
926	J1939(-)
927	J1939(SHIELD)
952	DDEC-SENSOR RETURN#1
953	DDEC-SENSOR RETURN#2
979	DDEC-ENGINE BRAKE 2 CYL.
2123	FLASHER SIGNAL LTS

CIRCUIT BREAKERS CODE

No.	PAGE	AMP.	#PREV.	LOCATION	FUNCTION
CB 1	1.1	200A	560838	BATT. COMPT.	A/C FULL AIR
CB 2	1.1	25A	561795	BATT. COMPT.	12V HOT WIRE
CB 3	1.1	70A	562687	BATT. COMPT.	12V FEDD RR JCT BOX
CB 4	1.1	90A	562683	BATT. COMPT.	12V FEDD FR JCT BOX
CB 5	1.1	25A	561795	BATT. COMPT.	24V HOT WIRE
CB 6	1.1	90A	562683	BATT. COMPT.	24V FEED RR JCT BOX
CB 7	1 .1	90A	562683	BATT. COMPT.	24V FEED FR JCT BOX
CB 8	15.3	40A	562686	A/C JCT BOX	CONDENSER FAN MOTOR L.H.
CB 9	15.3	120A	562688	A/C JCT BOX	EVAPORATOR FAN MOTOR
CB 10	4.1	8A	561791	FR JCT BOX	MASTER SWITCH
CB 11	15.3	40A	562686	A/C JCT BOX	CONDENSER FAN MOTOR R.H.
CB 12	29.1	90A	562683	BATT. COMPT.	WCL MOTOR PUMP
CB 13	6.1	3A	561797	RR JCT BOX	12 HOT WIRE DDR CONNECTOR
CB 14	15.4	25A	561795	FR JCT BOX	UPPER FAN DEFROST
CB 15					
CB 16	4.1	8A	561791	RR JCT BOX	ENGINE-RR CTR & START SW
CB 17					
CB 18	4.1	6A	561791	RR JCT BOX	ENGINE-FR CTR SW
CB 19	5.1	15A	561793	BATT. COMPT.	DDEC E.C.M. POWER
CB 20	5.1	15A	561793	BATT. COMPT.	DDEC E.C.M. POWER
CB 21	5.1	10A	561790	RR JCT BOX	DDEC 12V IGNITION
CB 22					
CB 23					
CB 24	6.3	30A	870860	BATT. COMPT.	EATON TR. 12V BATT
CB 25					
CB 26	9.3	10A	561792	RR JCT BOX	BACK-UP LTS & ALARM
CB 27	7.2	8A	561791	FR JCT BOX	24V IGN DASH ACCESSORIES
CB 28	7.1	6A	561790	FR JCT BOX	12V IGN. DASH ACCESSORIES
CB 29					
CB 30					
CB 31					
CB 32					
CB 33					
CB 34					
CB 35	9.3	6A	561790	FR JCT BOX	FOG & A/C MODULE
CB 36					
CB 37	9.1	8A	561791	FR JCT BOX	HEAD & MULTI-FUNC. SW
CB 38					
CB 39					
CB 40	9.1	10A	561791	FR JCT BOX	MARKER CLEARANCE & ID. LTS
CB 41					
CB 42	9.1	10A	561792	RR JCT BOX	RR TAIL & LICENCE LTS
CB 43	9.1	20A	561794	FR JCT BOX	HEADLAMP (HI)
CB 44	9.1	20A	561793	FR JCT BOX	HEADLAMP (LO)
CB 45	9.2	10A	561792	FR JCT BOX	MULTI-FUNC. SW (WIPER CTR)
CB 46	29.1	10A	561792	BATT. COMPT.	WCL SYSTEM POWER
CB 47	29.1	8A	561791	BATT. COMPT.	WCL DOOR TOP LT.
CB 48	9.3	6A	561790	FR JCT BOX	STOP SW
CB 49	9.3	15A	561793	RR JCT BOX	LH STOP LTS
CB 50					
CB 51	9.3	15A	561793	RR JCT BOX	RH STOP LTS & TRAILER SIGN.
CB 52	11.1	15A	561793	FR JCT BOX	LUGGAGE LTS
CB 53					
CB 54					
CB 55					
CB 56					
CB 57	11.2	8A	561791	FR JCT BOX	DASH LTS RHEOSTAT
CB 58	15.2	6A	561790	FR JCT BOX	HVAC DASH MODULE

No.	PAGE	AMP.	#PREV.	LOCATION	FUNCTION
CB 59					
CB 60					
CB 61					
CB 62					
CB 63					
CB 64					
CB 65					
CB 66					
CB 67					
CB 68					
CB 69					
CB 70					
CB 71					
CB 72	15.2	10A	561792	RR JCT BOX	A/C COMPRESSOR CLUTCH
CB 73	15.3	15A	561793	FR JCT BOX	WATER PUMP
CB 74					
CB 75	15.1	8A	561791	RR JCT BOX	PARCEL RACK A/C COMPRESSOR
CB 76					
CB 77					
CB 78					
CB 79	15.2	15A	561792	FR JCT BOX	DRIVER'S DEFROSTER FAN
CB 80	24.1	6A	561790	FR JCT BOX	ENTRANCE DOOR
CB 81					
CB 82					
CB 83	6.1	20A	561794	RR JCT BOX	WORLD TRANSMISSION VIM POWER
CB 84					
CB 85					
CB 86	26.1	8A	561791	RR JCT BOX	LAVATORY PUMP
CB 87					
CB 88					
CB 89	26.1	8A	561791	RR JCT BOX	LAVATORY LIGHTS
CB 90	1.2	30A	870860	BATT. COMPT.	12V SOUND SYSTEM
CB 91	1.2	30A	870860	BATT. COMPT.	24V SOUND SYSTEM
CB 92	17.1	6A	561790	FR JCT BOX	DECEL SW & KNEELING
CB 93	15.2	6A	561790	FR JCT BOX	DR'S REC. DAMPER CYL. L.H.
CB 95	28.1	10A	561792	S.S. JCT BOX	AUDIO AMPLIFIER
CB 96	28.1	10A	561792	S.S. JCT BOX	VIDEO MONITOR
CB 98	28.1	15A	561793	S.S. JCT BOX	RADIO
CB 105	22.1	6A	561790	FR JCT BOX	ABS E . C. U.
CB 106	22.1	15A	561793	FR JCT BOX	ABS E . C . U .
CB 107					
CB 109	26.1	8A	561791	RR JCT BOX	LAVATORY FAN
CB 115					
CB 118	12.1	20A	561794	RR JCT BOX	LUGGAGE DOOR LOCK MOTOR
CB 120	12.1	20A	561794	RR JCT BOX	LUGGAGE DOOR LOCK MOTOR
CB 124	8.1	6A	561790	RR JCT BOX	FAN CLUTCH RADIATOR
CB 125	9.2	20A	561794	FR JCT BOX	DIRECTIONAL LTS LH
CB 126	9.2	20A	561794	FR JCT BOX	DIRECTIONAL LTS RH
CB 127	15.1	15A	561793	RR JCT BOX	PARCEL RACK VENTILATION
CB 128	15.1	15A	561793	RR JCT BOX	PARCEL RACK VENTILATION
CB 129	7.1	6A	561790	FR JCT BOX	CLUSTER
CB 130	23.1	6A	561790	FR JCT BOX	TT LT MODULE
CB 132	14.1	15A	561793	RR JCT BOX	WATER HEATER
CB 138	14.1	20A	561793	RR JCT BOX	WATER HEATER
CB 142	2.1	15A	561790	RR JCT BOX	12V IGNITION FR. & RR. JCT. BOX

CIRCUIT BREAKERS CODE

No.	PAGE	AMP.	#PREV.	LOCATION	FUNCTION	No.	PAGE	AMP.	#PREV.	LOCATION	FUNCTION

CIRCUIT BREAKERS CODE

No.	PAGE	AMP.	#PREV.	LOCATION	FUNCTION
CB 1	1.1	200A	560838	BATT. COMPT.	A/C FULL AIR
CB 2	1.1	25A	561795	BATT. COMPT.	12V HOT WIRE
CB 3	1.1	70A	562687	BATT. COMPT.	12V FEDD RR JCT BOX
CB 4	1.1	90A	562683	BATT. COMPT.	12V FEDD FR JCT BOX
CB 5	1.1	25A	561795	BATT. COMPT.	24V HOT WIRE
CB 6	1.1	90A	562683	BATT. COMPT.	24V FEED RR JCT BOX
CB 7	1 .1	90A	562683	BATT. COMPT.	24V FEED FR JCT BOX
CB 8	15.3	40A	562686	A/C JCT BOX	CONDENSER FAN MOTOR L.H.
CB 9	15.3	120A	562688	A/C JCT BOX	EVAPORATOR FAN MOTOR
CB 10	4.1	8A	561791	FR JCT BOX	MASTER SWITCH
CB 11	15.3	40A	562686	A/C JCT BOX	CONDENSER FAN MOTOR R.H.
CB 12	29.1	90A	562683	BATT. COMPT.	WCL MOTOR PUMP
CB 13	6.1	3A	561797	RR JCT BOX	12 HOT WIRE DDR CONNECTOR
CB 14	15.4	25A	561795	FR JCT BOX	UPPER FAN DEFROST
CB 15					
CB 16	4.1	8A	561791	RR JCT BOX	ENGINE-RR CTR & START SW
CB 17					
CB 18	4.1	6A	561791	RR JCT BOX	ENGINE-FR CTR SW
CB 19	5.1	15A	561793	BATT. COMPT.	DDEC E.C.M. POWER
CB 20	5.1	15A	561793	BATT. COMPT.	DDEC E.C.M. POWER
CB 21	5.1	10A	561790	RR JCT BOX	DDEC 12V IGNITION
CB 22					
CB 23					
CB 24	6.3	30A	870860	BATT. COMPT.	EATON TR. 12V BATT
CB 25					
CB 26	9.3	10A	561792	RR JCT BOX	BACK-UP LTS & ALARM
CB 27	7.2	8A	561791	FR JCT BOX	24V IGN DASH ACCESSORIES
CB 28	7.1	6A	561790	FR JCT BOX	12V IGN. DASH ACCESSORIES
CB 29					
CB 30					
CB 31					
CB 32					
CB 33					
CB 34					
CB 35	9.3	6A	561790	FR JCT BOX	FOG & A/C MODULE
CB 36					
CB 37	9.1	8A	561791	FR JCT BOX	HEAD & MULTI-FUNC. SW
CB 38					
CB 39					
CB 40	9.1	10A	561791	FR JCT BOX	MARKER CLEARANCE & ID. LTS
CB 41					
CB 42	9.1	10A	561792	RR JCT BOX	RR TAIL & LICENCE LTS
CB 43	9.1	20A	561794	FR JCT BOX	HEADLAMP (HI)
CB 44	9.1	20A	561793	FR JCT BOX	HEADLAMP (LO)
CB 45	9.2	10A	561792	FR JCT BOX	MULTI-FUNC. SW (WIPER CTR)
CB 46	29.1	10A	561792	BATT. COMPT.	WCL SYSTEM POWER
CB 47	29.1	8A	561791	BATT. COMPT.	WCL DOOR TOP LT.
CB 48	9.3	6A	561790	FR JCT BOX	STOP SW
CB 49	9.3	15A	561793	RR JCT BOX	LH STOP LTS
CB 50					
CB 51	9.3	15A	561793	RR JCT BOX	RH STOP LTS & TRAILER SIGN.
CB 52	11.1	15A	561793	FR JCT BOX	LUGGAGE LTS
CB 53					
CB 54					
CB 55					
CB 56					
CB 57	11.2	8A	561791	FR JCT BOX	DASH LTS RHEOSTAT
CB 58	15.2	6A	561790	FR JCT BOX	HVAC DASH MODULE

No.	PAGE	AMP.	#PREV.	LOCATION	FUNCTION
CB 59					
CB 60					
CB 61					
CB 62					
CB 63					
CB 64					
CB 65					
CB 66					
CB 67					
CB 68					
CB 69					
CB 70					
CB 71					
CB 72	15.2	10A	561792	RR JCT BOX	A/C COMPRESSOR CLUTCH
CB 73	15.3	15A	561793	FR JCT BOX	WATER PUMP
CB 74					
CB 75	15.1	8A	561791	RR JCT BOX	PARCEL RACK A/C COMPRESSOR
CB 76					
CB 77					
CB 78					
CB 79	15.2	15A	561792	FR JCT BOX	DRIVER'S DEFROSTER FAN
CB 80	24.1	6A	561790	FR JCT BOX	ENTRANCE DOOR
CB 81					
CB 82					
CB 83	6.1	20A	561794	RR JCT BOX	WORLD TRANSMISSION VIM POWER
CB 84					
CB 85					
CB 86	26.1	8A	561791	RR JCT BOX	LAVATORY PUMP
CB 87					
CB 88					
CB 89	26.1	8A	561791	RR JCT BOX	LAVATORY LIGHTS
CB 90	1.2	30A	870860	BATT. COMPT.	12V SOUND SYSTEM
CB 91	1.2	30A	870860	BATT. COMPT.	24V SOUND SYSTEM
CB 92	17.1	6A	561790	FR JCT BOX	DECEL SW & KNEELING
CB 93	15.2	6A	561790	FR JCT BOX	DR'S REC. DAMPER CYL. L.H.
CB 95	28.1	10A	561792	S.S. JCT BOX	AUDIO AMPLIFIER
CB 96	28.1	10A	561792	S.S. JCT BOX	VIDEO MONITOR
CB 98	28.1	15A	561793	S.S. JCT BOX	RADIO
CB 105	22.1	6A	561790	FR JCT BOX	ABS E . C. U.
CB 106	22.1	15A	561793	FR JCT BOX	ABS E . C . U .
CB 107					
CB 109	26.1	8A	561791	RR JCT BOX	LAVATORY FAN
CB 115					
CB 118	12.1	20A	561794	RR JCT BOX	LUGGAGE DOOR LOCK MOTOR
CB 120	12.1	20A	561794	RR JCT BOX	LUGGAGE DOOR LOCK MOTOR
CB 124	8.1	8A	561791	RR JCT BOX	FAN CLUTCH RADIATOR
CB 125	9.2	20A	561794	FR JCT BOX	DIRECTIONAL LTS LH
CB 126	9.2	20A	561794	FR JCT BOX	DIRECTIONAL LTS RH
CB 127	15.1	15A	561793	RR JCT BOX	PARCEL RACK VENTILATION
CB 128	15.1	15A	561793	RR JCT BOX	PARCEL RACK VENTILATION
CB 129	7.1	6A	561790	FR JCT BOX	CLUSTER
CB 130	23.1	6A	561790	FR JCT BOX	TT LT MODULE
CB 132	14.1	15A	561793	RR JCT BOX	WATER HEATER
CB 138	14.1	20A	561793	RR JCT BOX	WATER HEATER
CB 142	2.1	15A	561790	RR JCT BOX	12V IGNITION FR. & RR. JCT. BOX

CIRCUIT BREAKERS CODE

No.	PAGE	AMP.	#PREV.	LOCATION	FUNCTION	No.	PAGE	AMP.	#PREV.	LOCATION	FUNCTION

CIRCUIT BREAKERS CODE

No.	PAGE	AMP.	#PREV.	LOCATION	FUNCTION
CB 1	1.1	200A	560838	BATT. COMPT.	A/C FULL AIR
CB 2	1.1	25A	561795	BATT. COMPT.	12V HOT WIRE
CB 3	1.1	70A	562687	BATT. COMPT.	12V FEDD RR JCT BOX
CB 4	1.1	90A	562683	BATT. COMPT.	12V FEDD FR JCT BOX
CB 5	1.1	25A	561795	BATT. COMPT.	24V HOT WIRE
CB 6	1.1	90A	562683	BATT. COMPT.	24V FEED RR JCT BOX
CB 7	1 .1	90A	562683	BATT. COMPT.	24V FEED FR JCT BOX
CB 8	15.3	40A	562686	A/C JCT BOX	CONDENSER FAN MOTOR L.H.
CB 9	15.3	120A	562688	A/C JCT BOX	EVAPORATOR FAN MOTOR
CB 10	4.1	8A	561791	FR JCT BOX	MASTER SWITCH
CB 11	15.3	40A	562686	A/C JCT BOX	CONDENSER FAN MOTOR R.H.
CB 12	29.1	50A	563355	BATT. COMPT.	WCL MOTOR PUMP
CB 13	6.1	3A	561797	RR JCT BOX	12 HOT WIRE DDR CONNECTOR
CB 14	15.4	25A	561795	FR JCT BOX	UPPER FAN DEFROST
CB 15					
CB 16	4.1	8A	561791	RR JCT BOX	ENGINE-RR CTR & START SW
CB 17					
CB 18	4.1	6A	561791	RR JCT BOX	ENGINE-FR CTR SW
CB 19	5.1	15A	561793	BATT. COMPT.	DDEC E.C.M. POWER
CB 20	5.1	15A	561793	BATT. COMPT.	DDEC E.C.M. POWER
CB 21	5.1	10A	561790	RR JCT BOX	DDEC 12V IGNITION
CB 22					
CB 23					
CB 24	6.3	30A	870860	BATT. COMPT.	EATON TR. 12V BATT
CB 25					
CB 26	9.3	10A	561792	RR JCT BOX	BACK-UP LTS & ALARM
CB 27	7.2	8A	561791	FR JCT BOX	24V IGN DASH ACCESSORIES
CB 28	7.1	6A	561790	FR JCT BOX	12V IGN. DASH ACCESSORIES
CB 29					
CB 30					
CB 31					
CB 32					
CB 33					
CB 34					
CB 35	9.3	6A	561790	FR JCT BOX	FOG & A/C MODULE
CB 36					
CB 37	9.1	8A	561791	FR JCT BOX	HEAD & MULTI-FUNC. SW
CB 38					
CB 39					
CB 40	9.1	10A	561791	FR JCT BOX	MARKER CLEARANCE & ID. LTS
CB 41					
CB 42	9.1	10A	561792	RR JCT BOX	RR TAIL & LICENCE LTS
CB 43	9.1	20A	561794	FR JCT BOX	HEADLAMP (HI)
CB 44	9.1	20A	561793	FR JCT BOX	HEADLAMP (LO)
CB 45	9.2	10A	561792	FR JCT BOX	MULTI-FUNC. SW (WIPER CTR)
CB 46	29.1	10A	561792	BATT. COMPT.	WCL SYSTEM POWER
CB 47	29.1	8A	561791	BATT. COMPT.	WCL DOOR TOP LT.
CB 48	9.3	6A	561790	FR JCT BOX	STOP SW
CB 49	9.3	15A	561793	RR JCT BOX	LH STOP LTS
CB 50					
CB 51	9.3	15A	561793	RR JCT BOX	RH STOP LTS & TRAILER SIGN.
CB 52	11.1	15A	561793	FR JCT BOX	LUGGAGE LTS
CB 53					
CB 54					
CB 55					
CB 56					
CB 57	11.2	8A	561791	FR JCT BOX	DASH LTS RHEOSTAT
CB 58	15.2	6A	561790	FR JCT BOX	HVAC DASH MODULE

No.	PAGE	AMP.	#PREV.	LOCATION	FUNCTION
CB 59					
CB 60					
CB 61					
CB 62					
CB 63					
CB 64					
CB 65					
CB 66					
CB 67					
CB 68					
CB 69					
CB 70					
CB 71					
CB 72	15.2	15A	561793	RR JCT BOX	A/C COMPRESSOR CLUTCH
CB 73	15.3	15A	561793	FR JCT BOX	WATER PUMP
CB 74					
CB 75	15.1	8A	561791	RR JCT BOX	PARCEL RACK A/C COMPRESSOR
CB 76					
CB 77					
CB 78					
CB 79	15.2	15A	561792	FR JCT BOX	DRIVER'S DEFROSTER FAN
CB 80	24.1	6A	561790	FR JCT BOX	ENTRANCE DOOR
CB 81					
CB 82					
CB 83	6.1	20A	561794	RR JCT BOX	WORLD TRANSMISSION VIM POWER
CB 84					
CB 85					
CB 86	26.1	8A	561791	RR JCT BOX	LAVATORY PUMP
CB 87					
CB 88					
CB 89	26.1	8A	561791	RR JCT BOX	LAVATORY LIGHTS
CB 90	1.2	30A	870860	BATT. COMPT.	12V SOUND SYSTEM
CB 91	1.2	30A	870860	BATT. COMPT.	24V SOUND SYSTEM
CB 92	17.1	6A	561790	FR JCT BOX	DECEL SW & KNEELING
CB 93	15.2	6A	561790	FR JCT BOX	DR'S REC. DAMPER CYL. L.H.
CB 95	28.1	10A	561792	S.S. JCT BOX	AUDIO AMPLIFIER
CB 96	28.1	10A	561792	S.S. JCT BOX	VIDEO MONITOR
CB 98	28.1	15A	561793	S.S. JCT BOX	RADIO
CB 105	22.1	6A	561790	FR JCT BOX	ABS E . C. U.
CB 106	22.1	15A	561793	FR JCT BOX	ABS E . C . U .
CB 107					
CB 109	26.1	8A	561791	RR JCT BOX	LAVATORY FAN
CB 115					
CB 118	12.1	20A	561794	RR JCT BOX	LUGGAGE DOOR LOCK MOTOR
CB 120	12.1	20A	561794	RR JCT BOX	LUGGAGE DOOR LOCK MOTOR
CB 124	8.1	8A	561791	RR JCT BOX	FAN CLUTCH RADIATOR
CB 125	9.2	20A	561794	FR JCT BOX	DIRECTIONAL LTS LH
CB 126	9.2	20A	561794	FR JCT BOX	DIRECTIONAL LTS RH
CB 127	15.1	15A	561793	RR JCT BOX	PARCEL RACK VENTILATION
CB 128	15.1	15A	561793	RR JCT BOX	PARCEL RACK VENTILATION
CB 129	7.1	6A	561790	FR JCT BOX	CLUSTER
CB 130	23.1	6A	561790	FR JCT BOX	TT LT MODULE
CB 132	14.1	15A	561793	RR JCT BOX	WATER HEATER
CB 138	14.1	20A	561793	RR JCT BOX	WATER HEATER
CB 142	2.1	15A	561790	RR JCT BOX	12V IGNITION FR. & RR. JCT. BOX

CIRCUIT BREAKERS CODE

No.	PAGE	AMP.	#PREV.	LOCATION	FUNCTION	No.	PAGE	AMP.	#PREV.	LOCATION	FUNCTION

CIRCUIT BREAKERS CODE

No.	PAGE	AMP.	#PREV.	LOCATION	FUNCTION
CB 1	1.1	200A	560838	BATT. COMPT.	A/C FULL AIR
CB 2	1.1	25A	561795	BATT. COMPT.	12V HOT WIRE
CB 3	1.1	70A	562687	BATT. COMPT.	12V FEDD RR JCT BOX
CB 4	1.1	90A	562683	BATT. COMPT.	12V FEDD FR JCT BOX
CB 5	1.1	25A	561795	BATT. COMPT.	24V HOT WIRE
CB 6	1.1	90A	562683	BATT. COMPT.	24V FEED RR JCT BOX
CB 7	1 .1	90A	562683	BATT. COMPT.	24V FEED FR JCT BOX
CB 8	15.3	40A	562686	A/C JCT BOX	CONDENSER FAN MOTOR L.H.
CB 9	15.3	120A	562688	A/C JCT BOX	EVAPORATOR FAN MOTOR
CB 10	4.1	8A	561791	FR JCT BOX	MASTER SWITCH
CB 11	15.3	40A	562686	A/C JCT BOX	CONDENSER FAN MOTOR R.H.
CB 12	29.1	50A	563355	BATT. COMPT.	WCL MOTOR PUMP
CB 13	6.1	3A	561797	RR JCT BOX	12 HOT WIRE DDR CONNECTOR
CB 14	15.4	25A	561795	FR JCT BOX	UPPER FAN DEFROST
CB 15					
CB 16	4.1	8A	561791	RR JCT BOX	ENGINE-RR CTR & START SW
CB 17					
CB 18	4.1	6A	561791	RR JCT BOX	ENGINE-FR CTR SW
CB 19	5.1	15A	561793	BATT. COMPT.	DDEC E.C.M. POWER
CB 20	5.1	15A	561793	BATT. COMPT.	DDEC E.C.M. POWER
CB 21	5.1	10A	561790	RR JCT BOX	DDEC 12V IGNITION
CB 22					
CB 23					
CB 24	6.3	30A	870860	BATT. COMPT.	EATON TR. 12V BATT
CB 25					
CB 26	9.3	10A	561792	RR JCT BOX	BACK-UP LTS & ALARM
CB 27	7.2	8A	561791	FR JCT BOX	24V IGN DASH ACCESSORIES
CB 28	7.1	6A	561790	FR JCT BOX	12V IGN. DASH ACCESSORIES
CB 29					
CB 30					
CB 31					
CB 32					
CB 33					
CB 34					
CB 35	9.3	6A	561790	FR JCT BOX	FOG & A/C MODULE
CB 36					
CB 37	9.1	8A	561791	FR JCT BOX	HEAD & MULTI-FUNC. SW
CB 38					
CB 39					
CB 40	9.1	10A	561791	FR JCT BOX	MARKER CLEARANCE & ID. LTS
CB 41					
CB 42	9.1	10A	561792	RR JCT BOX	RR TAIL & LICENCE LTS
CB 43	9.5	15A	561793	FR JCT BOX	HEADLAMP (HI)
CB 44	9.5	15A	561793	FR JCT BOX	HEADLAMP (LO)
CB 45	9.2	10A	561792	FR JCT BOX	MULTI-FUNC. SW (WIPER CTR)
CB 46	29.1	10A	561792	BATT. COMPT.	WCL SYSTEM POWER
CB 47	29.1	8A	561791	BATT. COMPT.	WCL DOOR TOP LT.
CB 48	9.3	6A	561790	FR JCT BOX	STOP SW
CB 49	9.3	15A	561793	RR JCT BOX	LH STOP LTS
CB 50	8.1SP1	8A	561791	RR JCT BOX	AIR DRYER
CB 51	9.3	15A	561793	RR JCT BOX	RH STOP LTS & TRAILER SIGN.
CB 52	11.1	15A	561793	FR JCT BOX	LUGGAGE LTS
CB 53					
CB 54					
CB 55					
CB 56					
CB 57	11.2	8A	561791	FR JCT BOX	DASH LTS RHEOSTAT
CB 58	15.2	6A	561790	FR JCT BOX	HVAC DASH MODULE

No.	PAGE	AMP.	#PREV.	LOCATION	FUNCTION
CB 59					
CB 60					
CB 61					
CB 62					
CB 63					
CB 64					
CB 65					
CB 66					
CB 67					
CB 68					
CB 69					
CB 70					
CB 71					
CB 72	15.2	15A	561793	RR JCT BOX	A/C COMPRESSOR CLUTCH
CB 73	15.3	15A	561793	FR JCT BOX	WATER PUMP
CB 74					
CB 75	15.1	8A	561791	RR JCT BOX	PARCEL RACK A/C COMPRESSOR
CB 76					
CB 77					
CB 78					
CB 79	15.2	25A	561795	FR JCT BOX	DRIVER'S DEFROSTER FAN
CB 80	24.1	6A	561790	FR JCT BOX	ENTRANCE DOOR
CB 81					
CB 82					
CB 83	6.1	20A	561794	RR JCT BOX	WORLD TRANSMISSION VIM POWER
CB 84					
CB 85					
CB 86	26.1	8A	561791	RR JCT BOX	LAVATORY PUMP
CB 87					
CB 88					
CB 89	26.1	8A	561791	RR JCT BOX	LAVATORY LIGHTS
CB 90	1.2	30A	870860	BATT. COMPT.	12V SOUND SYSTEM
CB 91	1.2	30A	870860	BATT. COMPT.	24V SOUND SYSTEM
CB 92	17.1	6A	561790	FR JCT BOX	DECEL SW & KNEELING
CB 93	15.2	6A	561790	FR JCT BOX	DR'S REC. DAMPER CYL. L.H.
CB 95	28.1	10A	561792	S.S. JCT BOX	AUDIO AMPLIFIER
CB 96	28.1	10A	561792	S.S. JCT BOX	VIDEO MONITOR
CB 98	28.1	15A	561793	S.S. JCT BOX	RADIO
CB 105	22.1	6A	561790	FR JCT BOX	ABS E . C. U.
CB 106	22.1	15A	561793	FR JCT BOX	ABS E . C . U .
CB 107					
CB 109	26.1	8A	561791	RR JCT BOX	LAVATORY FAN
CB 115					
CB 118	12.1	20A	561794	RR JCT BOX	LUGGAGE DOOR LOCK MOTOR
CB 120	12.1	20A	561794	RR JCT BOX	LUGGAGE DOOR LOCK MOTOR
CB 124	8.1	8A	561791	RR JCT BOX	FAN CLUTCH RADIATOR
CB 125	9.2	20A	561794	FR JCT BOX	DIRECTIONAL LTS LH
CB 126	9.2	20A	561794	FR JCT BOX	DIRECTIONAL LTS RH
CB 127	15.1	15A	561793	RR JCT BOX	PARCEL RACK VENTILATION
CB 128	15.1	15A	561793	RR JCT BOX	PARCEL RACK VENTILATION
CB 129	7.1	6A	561790	FR JCT BOX	CLUSTER
CB 130	23.1	6A	561790	FR JCT BOX	TT LT MODULE
CB 132	14.1	15A	561793	RR JCT BOX	WATER HEATER
CB 138	14.1	20A	561793	RR JCT BOX	WATER HEATER
CB 142	2.1	15A	561790	RR JCT BOX	12V IGNITION FR. & RR. JCT. BOX

CIRCUIT BREAKERS CODE

No.	PAGE	AMP.	#PREV.	LOCATION	FUNCTION	No.	PAGE	AMP.	#PREV.	LOCATION	FUNCTION

CONNECTORS CODE

NO	LOCATION	TYPE	CAVITY	#PIN HOUSING	#SOCKET HOUSING
A 1	UNDER DASH – AUDIO SIGNAL	RCA	1	562090	562330
A 2	UNDER DASH – AUDIO SIGNAL	RCA	1	562090	562330
A 10	UNDER DASH – AUDIO SIGNAL	RCA	1	562090	562330
A 11	UNDER DASH – AUDIO SIGNAL	RCA	1	562090	562330
A 18	S. S. PANEL – AUDIO SIGNAL	RCA	1	562090	562330
A 19	S. S. PANEL – AUDIO SIGNAL	RCA	1	562090	562330
AA 1	UNDER DASH PANEL- SONALERT	BOSCH	5	------	561183
C 1	FR JCT BOX COMPARTIMENT	AMP CPC	14	561585	561584
C 2	FR JCT BOX COMPARTIMENT	AMP CPC	16	561638	561640
C 3	FR JCT BOX COMPARTIMENT	AMP CPC	37	561644	561646
C 4	FR JCT BOX COMPARTIMENT	AMP CPC	24	561641	561643
C 5	FR SERVICE COMPT. - UNDERNEATH	AMP CPC	37	561645	561646
C 6	FR SERVICE COMPT. - UNDERNEATH	AMP CPC	16	561639	561640
C 7	FR SERVICE COMPT - CLUTCH SW	ITT SS	3	561080	561111
C 8	FR SERVICE COMPT. - UNDERNEATH	AMP CPC	24	561642	561643
C 9	FR SERVICE COMPT. - UNDERNEATH	AMP CPC	24	561642	561643
C 10	FR SERVICE DOOR ACCESS.	DEUTSCH	5	562565	562566
C 11	FR SERV. CPT ACCESS	AMP CPC	37	561645	561646
C 12	FR SERV. CPT ACCESS	AMP CPC	16	561639	561640
C 13	FR JCT BOX COMPARTIMENT	AMP MNL	2	561248	561247
C 14	LAST LUGGAGE COMP(4) - DOCKING LTS	AMP MNL	2	561248	561247
C 15	UNDER STAIRS – CORNERING LTS	AMP MNL	2	560900	560898
C 16	LH CONSOLE SW-CRUISE ON/OFF	EATON	12	------	562763
C 17	LH CONSOLE SW-CRUISE RESUME	EATON	12		562763
C 18	LH CONSOLE SW-CRUISE SET	EATON	12		562763
C 19	LH CONSOLE SW-DECEL SW	EATON	12		562763
C 20	RR JCT BOX	DEUTSCH	70	562282	562285
C 21	ENGINE COMPT - LOCK DOOR MOT.	PED WP	2		562076
C 22	LUGGAGE COMPT (A) - A/C & FUEL TANK	AMP CPC	16	561639	561640
C 23	LUGGAGE COMPT (1) – LUGG. ACCESS.	AMP CPC	24	561642	561643
C 24	ENGINE COMPT. – INTERF RJB	PED WP	6	561606	561607
C 25	ENGINE COMPT. – INTERF RJB	PED WP	6	561606	561607
C 26	ENGINE COMPT. ACCESS	DEUTSCH	40	562281	562284
C 27	ENGINE COMPT. – INTERF. RJB	DEUTSCH	6	562583	562581
C 28	LUGGAGE COMPT(4) – LUGG. ACCESS	AMP CPC	24	561642	561643
C 29	FR SERVICE COMPT – E.C.U. FEED	PED WP	3	561781	561782
C 30	ENGINE COMPT – MASTER SW. SIGN.	DEUTSCH	2	562486	562485
C 31	RR JCT BOX – PARCEL RACK FEEDING	DEUTSCH	31	562572	562536
C 32	ENGINE COMPT. – 12VI FOR OPTION	PED WP	1	-----	561577
C 33	FR SERV. COMPT. – VSS SIGNAL	PED WP	2	561566	561690
C 34	FR JCT BOX EATON TRANS. J1939	DEUTSCH	3	562877	562884
C 35	A/C COMPT - AIR RETURN SENSOR	AMP MNL	2	561248	561247
C 36	UNDER STAIRS – STEP LIGHTS	AMP MNL	2	561248	561247
C 36	RH PARCEL RACK – EMERGENCY LTS	AMP MNL	2	560900	560898
C 37	LH PARCEL RACK - FEEDING	MOLEX	6	562558	562557
C 38	RH PARCEL RACK - FEEDING	MOLEX	6	562558	562557
C 39	ENGINE COMPT. ECM J1939	DEUTSCH	3	562877	562884
C 40					
C 41	ENGINE COMPT – RH DOOR LOCK	DEUTSCH	4	562479	562477
C 42	ENGINE COMPT – RR CAP LIGHTING	DEUTSCH	6	562583	562581
C 43	FR JCT BOX – ALT. MODULE	AMP MNL	12	561735	561734
C 44	ENGINE COMPT - LIGHTS	GROTE	2		563268
C 45	FR JCT BOX COMPT – ROOF ACCESS	AMP CPC	24	561642	561643
C 46	ENGINE COMPT. ECM J1939	DEUTSCH	3	562877	562884
C 47	ENGINE DDEC-ECM J1939	PED MP	6	------	561962
C 48	FR SERV. CPT. PRESS SW PARK BRAKE	PED WP	2	561566	561690
C 49	LAVATORY ROOF – NIGHT LIGHT	AMP MNL	2	560900	560898
C 50	LAVATORY ROOF - LIGHT	LEECRAFT	2	-------	562803
C 50	LH SWITCH PANEL – SAFETY SW.	EATON	12	------	562763
C 51	FR SERV.CPT.PARK. BRAKE SOL. VALVE	PNEUMAC	2	------	641385
C 52	ENGINE COMPT - COMPRESSOR	PED WP	2	561566	561690
C 53	ENGINE COMPT - COMPRESSOR	PED WP	2	561566	561690
C 54	FRONT ROOF – UPPER FAN DEFROST	AMP MNL	6	561552	561515
C 55	CENTRAL DOOR LOCK	DEUTSCH	4	562479	562477
C 56	LH PARCEL RACK - FEEDING	MOLEX	6	562558	562557

NO	LOCATION	TYPE	CAVITY	#PIN HOUSING	#SOCKET HOUSING
C 57	RH PARCEL RACK - FEEDING	MOLEX	6	562558	562557
C 58					
C 59					
C 60					
C 61	ENGINE COMPT - FUEL FILTER	PED WP	2	561566	561690
C 62	ENGINE COMPT – COMPR. AUX. PRESS. SW.	PED WP	2	561566	561690
C 63	ENGINE COMPT – COMPR. AUX. PRESS. SW.	PED WP	2	561566	561690
C 64					
C 65	ENGINE CPT – A/C PRESS SW FAN CLUTCH	PED WP	2	561566	561690
C 66	ENGINE CPT – SPARE CONNECTOR	PED WP	1	561605	561577
C 67					
C 68					
C 69					
C 70	LH CONSOLE	AMP CPC	16	561639	561640
C 71	FR JCT BOX COMPT.	AMP CPC	37	561645	561646
C 72	FR JCT BOX COMPT.	AMP CPC	24	561642	561643
C 73					
C 74	FR JCT BOX COMPT.	AMP CPC	37	561645	561646
C 75	SERVICE COMPT. EXT. ENTRANCE DOOR SW.	DEUTSCH	4	562479	562477
C 75	RH PARCEL RACK – READ. LTS FEED. WCL	MOLEX	6	562558	562557
C 76	ENGINE COMPT. FIRE DETECTOR	DEUTSCH	2	562486	562485
C 77	ENGINE COMPT. FIRE DETECTOR	DEUTSCH	2	562486	562485
C 78					
C 79					
C 80					
C 81	LUGGAGE COMPT - DOOR LOCK	AMP MNL	4	560851	560852
C 82	UNDER SEAT – AISLE LTS	AMP MNL	2	560900	560898
C 82	LUGGAGE COMPT - DOOR LOCK	AMP MNL	4	560851	560852
C 83	LUGGAGE COMPT - DOOR LOCK	AMP MNL	4	560851	560852
C 84	LUGGAGE COMPT - DOOR LOCK	AMP MNL	4	560851	560852
C 85					
C 86					
C 87					
C 88	FR SERV. CPT. PRESS SW PARK BRAKE	PED WP	2	561566	561690
C 89					
C 90					
C 91					
C 92	FR JCT BOX COMPT - ABS	AMP CPC	9	561635	561637
C 93					
C 94					
C 95					
C 96	FR SERVICE DOOR ACCESS	AMP MNL	9	561670	561669
C 97	FR SERVICE DOOR – WATER TANK	PED MP	2		562426
C 98					
C 99	FR SERVICE CPT. LTS	AMP MNL	2	561248	561247
C 100					
C 101	FR SERVICE COMPT. ELEC. HORNS	PED WP	2	561566	561690
C 101	CONDENSER COMPT - A/C PRES. SW 1SP	PED WP	2	561566	561690
C 102	CONDENS. COMPT – LIQU. SOL. VAL. PRES.	PED WP	2	561566	561690
C 103	ENGINE COMPT. – LAVATORY FAN	PED WP	2	561566	561690
C 104	ENGINE COMPT. – LAVATORY PUMP	DEUTSCH	4	562479	562477
C 105	UNDER DASH RH - DRV LIO SOL VL	PED WP	2	561566	561690
C 106	UNDER DASH RH - DRV WTR VALVE	PED WP	2	561566	561690
C 107	ENGINE COMPT- LAVATORY PUSH BUTTON	PED WP	2	561566	561690
C 108	FR. SERICE COMPT – GAZ CYLINDER L.H.	DEUTSCH	2	562486	562485
C 109					
C 110					
C 111					
C 112					
C 113					
C 114	ENGINE DDEC - SPEED SIGNAL	PED WP	2	561566	561690
C 115	RR JCT BOX – ENGINE ACCESS	DEUTSCH	40	562281	562284
C 116	DRIVE AXLE COMPT-AIR DRYER	PED MP	2	n/a	562251
C 117					
C 118	ENGINE COMPT - LICENCE	DOM. AUT	2	930210	

CONNECTORS CODE

NO	LOCATION	TYPE	CAVITY	#PIN HOUSING	#SOCKET HOUSING
C 119	ENGINE COMPT - RH LOWER LAMP	PED WP	6	561606	561607
C 120	ENGINE COMPT - LH LOWER LAMP	PED WP	6	561606	561607
C 121					
C 122					
C 123					
C 124					
C 125					
C 126					
C 127					
C 128					
C 129					
C 130					
C 131					
C 132					
C 133					
C 134	FR JCT BOX – DIODE CONN.	AMP MNL	15	561987	561986
C 135	FR JCT BOX – DIODE CONN.	AMP MNL	15	561987	561986
C 136	FR JCT BOX – DIODE CONN.	AMP MNL	15	561987	561986
C 137	FR JCT BOX – DIODE CONN.	AMP MNL	15	561987	561986
C 138					
C 139					
C 140	HVAC DASH MODULE THERMOMETER	MOLEX	4		562782
C 141	RR DASH PANEL – LTS CONN. (SPARE)	AMP MNL	2	561248	561247
C 142	ENGINE COMPT. B/U ALARM	PED WP	2	561566	561690
C 143					
C 144	FR JCT BOX – AISLE LTS FEEDING	AMP MNL	2	561248	561247
C 145					
C 146					
C 147					
C 148					
C 149					
C 150					
C 151					
C 152					
C 153					
C 154					
C 155	EVAPORATOR CPT - WATER VALVE	BURKERT	3		563204
C 156					
C 157	FR SERV. CPT – WATER PUMP DR'S	PED WP	3	561781	561782
C 158	ENGINE CPT – DDEC INTERFACE CONNECTOR	DEUTSCH	31	562572	562536
C 159	ENGINE CPT – DDE FEED	PED WP	6	561606	561607
C 160	FR SERVICE CPT - INTERFACE	AMP CPC	37	561644	561646
C 161	ENGINE DDEC - ECM	PED MP	30		561600
C 162	ENGINE DDEC - ACCESSORIES	PED WP	4	561610	561611
C 163	ENGINE CPT - COOLANT PROBE	PED MP	2		562350
C 164					
C 165					
C 166					
C 167	FR SERVICE CPT - EL. FOOT PEDAL	PED WP	3	561781	561782
C 168	FR SERVICE CPT - DDR	DEUTSCH	6	562360	
C 169	FR SERVICE CPT - WORLD TR. INTERFACE	AMP CPC	16	561639	561640
C 169	FR SERV. COMPT. – SPEED SWITCH	AMP	15	562011	562012
C 170	FR JCT BOX FLASHER UNIT	PED	2		561940
C 171	LH CONSOLE	AMP CPC	24	561642	561643
C 172	FR SERVICE COMPT – KNEELING PANEL	AMP CPC	16	561639	561640
C 172	ENGINE COMPT. – WATER TANK HEATER	PED WP	2	561566	561690
C 173					
C 174					
C 175					
C 176	UNDER DASH RH – WIPER PULSE	AMP FF	6		561186
C 177	UNDER DASH RH – WIPER MOTOR	AMP FF	6		561186
C 178					
C 179					
C 180	KNEELING PANEL – DIODE SOCKET	AMP MNL	15	561987	561986
C 181					

NO	LOCATION	TYPE	CAVITY	#PIN HOUSING	#SOCKET HOUSING
C 182					
C 183					
C 184	FR SERV. COMPT. – KNEELING PROX. SW.	ITT SS	3	561080	561111
C 185	KNEELING PANEL – DOWN SOL. VALVE	PNEUMAC	3		641385
C 186					
C 187	FR SERVICE JCT BOX - RESISTORS	AMP MNL	6	561552	561515
C 187	KNEELING PANEL– PARK BRAKE INTERLOCK	PNEUMAC	3		641385
C 188					
C 189	ENGINE COMPT – DOOR LIGHT BACK UP	TRUCK-LITE	2	562755	
C 190	ENGINE COMPT – DOOR LIGHT STOP/TURN	AMP SS	3		562601
C 191	ENGINE COMPT – DOOR LIGHT STOP/TURN	AMP SS	3		562601
C 192	ENGINE COMPT – DOOR LIGHT PARKING	AMP SS	3		562601
C 193					
C 194					
C 195					
C 196	KNEELING PANEL – UP SOL. VALVE	PNEUMAC	3		641385
C 197	KNEELING PANEL – CTR SOL. VALVE	PNEUMAC	3		641385
C 198					
C 199					
C 200	PARCEL RACK – FLUORESCENT LTS	AMP MNL	2	561248	561247
C 201	PARCEL RACK – FLUORESCENT LTS	AMP MNL	2	561248	561247
C 202	RH PARCEL RACK – INDIRECT LTS	MOLEX	2		562758
C 203	PARCEL RACK – FLUORESCENT LTS	MOLEX	6		562759
C 204	RH PARCEL RACK – RACK LTS	AMP MNL	2	560900	560858
C 205	RH PARCEL RACK – FEEDING	AMP MNL	9	561661	561662
C 206	RH PARCEL RACK – FEEDING	AMP FF	4	562760	562756
C 207	LH PARCEL RACK – FEEDING	AMP FF	4	562760	562756
C 208	PARCEL RACK – FLUORESCENT LTS	MOLEX	2		562758
C 209	LH PARCEL RACK – HOTESS CHIME	AMP MNL	3	561667	561550
C 210	LH PARCEL RACK – FEEDING	AMP MNL	9	561661	561662
C 211	FR ROOF – SUN VISOR LH	AMP MNL	2	560900	560898
C 212	FR ROOF – SUN VISOR RH	AMP MNL	2	560900	560898
C 213	WCL DOOR UP HING–DOOR READ & HOST. SW	AMP MNL	6	561552	561515
C 214					
C 215					
C 216					
C 217	RH PANEL SW. – SCENIC VIEW CAMERA	EATON	12		562763
C 218	RH PANEL SW. – LIGHTS SPARE	AMP MNL	2	560900	560898
C 219					
C 220					
C 221					
C 222					
C 223	HEAD LIGHTS - FLASHER	DEUTSCH	5	562565	562566
C 224	HEAD LIGHTS	PED MP	3		562099
C 225	FOG LIGHTS	DEUTSCH	3	562902	562901
C 226	FRONT HEADLIGHTS – MARKER & FLASHER	PED	3	562137	
C 226	BATT. COMPT. – INTERIOR LTS	AMP MNL	2	561248	561247
C 227					
C 228					
C 229	BATT. COMPT. – CHARGER 110V.	PED WP	1	561577	561605
C 230	ENGINE COMPT. – FUEL PRIME PUMP SW.	PED WP	2	561566	561690
C 231	ENGINE COMPT. – FUEL PRIME PUMP	PED WP	2	561566	561690
C 232					
C 233	FIRST LUGGAGE CPT.	VDO	8		562043
C 234	FIRST LUGGAGE CPT.	VDO	8		562044
C 235	FIRST LUGGAGE CPT.	VDO	8		562041
C 236	FIRST LUGGAGE CPT.	AMP MNL	4	560851	560858
C 236	FR SERVICE CPT CENTER - ABS	AMP CPC	14	561636	561637
C 237	FR AXLE CPT - ABS RH SENSOR	WABCO	2	641132	
C 238	FR AXLE CPT - ABS RH VALVE	WABCO	3	641098	
C 239	FR AXLE CPT - ABS LH VALVE	WABCO	3	641098	
C 240	FR AXLE CPT - ABS LH SENSOR	WABCO	2	641132	
C 241	LAST LUGGAGE COMPT - ABS	PED WP	6	561606	561607
C 242	DRIVE AXLE CPT - ABS LH SENSOR	WABCO	2	641132	
C 243	DRIVE AXLE CPT - ABS LH VALVE	WABCO	3	641098	

CONNECTORS CODE

NO	LOCATION	TYPE	CAVITY	#PIN HOUSING	#SOCKET HOUSING
C 244	DRIVE AXLE CPT - ABS RH VALVE	WABCO	3	641098	
C 245	DRIVE AXLE CPT - ABS RH SENSOR	WABCO	2	641132	
C 246	DRIVE AXLE CPT – ATC SOL.	PED WP	2	561566	561690
C 247	E.C.U. EATON TRANS.	PED MP	18		562573
C 248	LAST LUGGAGE CPT - ABS	PED WP	6	561606	561607
C 249	FR SERVICE CPT - ABS/DDEC	PED WP	2	561566	561690
C 250	LH CONSOLE – LOW BOUY	PED WP	2	561566	561690
C 251	LH SW PANEL – FAST IDLE	EATON	12		562763
C 252	LUGGAGE COMPT. – WINDOW AJAR	MOLEX	4	561477	561476
C 253	LH SWITCH PANEL - ETHER	EATON	12		562763
C 254					
C 255	LH SWITCH PANEL – ENGINE BRAKE	EATON	12		562763
C 256					
C 257					
C 258	LH SWITCH PANEL – MULTI FUNC. SW	AMP FF	8	561188	
C 259					
C 259	LH SWITCH PANEL – MULTI FUNC. SW	AMP FF	6		561186
C 260					
C 261					
C 262					
C 263	LUGGAGE COMPT. LTS COMPT #3	AMP MNL	2	561248	561247
C 264	LUGGAGE COMPT. LTS COMPT #2	AMP MNL	2	561248	561247
C 265	LUGGAGE COMPT. LTS COMPT #1	AMP MNL	2	561248	561247
C 266	ENTRACE DOOR KEYLESS	AMP CPC	14	561585	561583
C 267	UNDER DASH RH – ENT. DOOR PANEL	AMP CPC	24	561642	561643
C 268	FR MIRROR RH	CONXALL	5	563091	563090
C 269	FR MIRROR LH	CONXALL	5	563091	563090
C 270	LUGGAGE COMPT LTS - 3 LH	AMP MNL	2	561248	561247
C 271	LUGGAGE COMPT LTS - 4	AMP MNL	2	561248	561247
C 272					
C 273	ENT. DOOR PANEL – DIODE SOCKET	AMP MNL	9	561670	561669
C 274					
C 275	ENT. DOOR PANEL – DIODE SOCKET	AMP MNL	9	561670	561669
C 276					
C 277	RH UNDER DASH – ENT. DOOR REED SW.	AMP MNL	2	560900	560858
C 278	RH PASS. AIR DUCT – ENT DOOR PRESS SW.	PED WP	2	561566	561690
C 279	RH UNDER DASH – ENT. DOOR REED SW.	AMP MNL	2	560900	560858
C 279	FR SERVICE COMPT LH – STEERING ZF	DEUTSCH	2		562485
C 280	ENGINE COMPT – A/C COMPRESSOR AUX.	PED WP	2	561566	561690
C 281					
C 282	FR SERVICE COMPT – STEERING ZF	VOLVO	2		562928
C 283	LH CONSOLE – SPARE SW. LTS	AMP MNL	2	561248	561247
C 284					
C 285					
C 286					
C 287					
C 288					
C 289					
C 290	LUGGAGE CPT - DOOR LOCK	AMP MNL	4	560851	560852
C 291	LUGGAGE CPT - DOOR LOCK	AMP MNL	4	560851	560852
C 292					
C 293					
C 294					
C 295					
C 296					
C 297					
C 298					
C 299	RH SWITCH PANEL - GALLEY	EATON	12		562763
C 300					
C 301					
C 302					
C 303	RR JCT BOX - DIODES	AMP MNL	15	561987	561986
C 304	RR JCT BOX - DIODES	AMP MNL	15	561987	561986
C 305					
C 306					

NO	LOCATION	TYPE	CAVITY	#PIN HOUSING	#SOCKET HOUSING
C 307					
C 308					
C 309	ENGINE DDEC - ECM POWER	PED	4	561610	561611
C 310	LH CONSOLE SW – LUG. DOOR LOCK	EATON	12		562763
C 311	RH SWITCH PANEL – HOTESS CHIME	EATON	12		562763
C 312	ENGINE DDEC - ACCESSORIES	PED WP	3	561781	561782
C 312	RH SWITCH PANEL – READING LAMP	EATON	12		562763
C 313	ENGINE DDEC – INTERFACE	FCI	10	563207	
C 313	RH SWITCH PANEL – INTERIOR LTS	EATON	12		562763
C 314	KNEELING PANEL – PRESS SW.	PED WP	2	561566	561690
C 314	RH SWITCH PANEL – INTERIOR LTS	EATON	12		562763
C 315	LH SWITCH PANEL – LH SUN VISOR SW.	EATON	12		562763
C 316	INTO HORN BOX – KNEELING BUZZER	DEUTSCH	2	562486	562485
C 317	LH SWITCH PANEL – RH SUN VISOR SW.	EATON	12		562763
C 318	LH CONSOLE SW – DR'S WINDOW SW.	EATON	12		562763
C 319	ENGINE DDEC - ECM POWER	PED	4	561610	561611
C 320	RT SWITCH PANEL – DRIVER'S LTS SW.	EATON	12		562763
C 321	UNDER DASH RH - KEYLESS MODULE	AMP COM	26		562676
C 322	UNDER DASH RH - KEYLESS MODULE	AMP COM	22		562675
C 323	DRIVER'S WINDOW MOTOR	PED	2		561848
C 324	LH SWITCH PANEL – UPPER FAN DEFROST	EATON	12		562763
C 325	LH SWITCH PANEL – KNEELING	EATON	12		562763
C 326					
C 327					
C 328	RR ROOF – GALLEY LAMP		2		
C 329					
C 330					
C 331					
C 332					
C 333					
C 334					
C 335					
C 336					
C 337					
C 338					
C 339	KNEELING PANEL – HI BUOY SOL. VALVE	PNEUMAC	3		641385
C 340	FR JCT BOX – FIRE PIEZO ALARM	AMP MNL	2	560900	560898
C 341	LH SWITCH PANEL – HEAT MIRROR SW.	EATON	12		562763
C 342					
C 343	LH SWITCH PANEL – HEAD LAMP SW.	EATON	12		562763
C 344	LH SWITCH PANEL – HAZARD LT SW.	EATON	12		562763
C 345	LH SWITCH PANEL – FOG LT SW.	EATON	12		562763
C 346					
C 347					
C 348	INSTR. PANEL CENT. – RACOR MODULE	MOLEX	6	562070	562069
C 349					
C 350					
C 351					
C 352					
C 353					
C 354					
C 355					
C 356					
C 357					
C 358					
C 359	RH SWITCH PANEL – ENT. DOOR WIND. SW.	EATON	12		562763
C 360	ENTRACE WINDOW MOTOR	PED	2		561848
C 361					
C 362					
C 363					
C 364	FRONT ROOF - ELECTRICAL DEST. SIGN	AMP MNL	3	561667	561550
C 365					
C 366					
C 367					
C 368	FRONT ROOF – ELECTRICAL DEST. SIGN	AMP MNL	3	561667	561550

CONNECTORS CODE

NO	LOCATION	TYPE	CAVITY	#PIN HOUSING	#SOCKET HOUSING
C 369	FRONT ROOF – ELECTRICAL DEST. SIGN	TORRIX	5	562110	
C 370	FRONT ROOF – ELECTRICAL DEST. SIGN	AMP MNL	2	560900	560858
C 371	FRONT ROOF – ELECTRICAL DEST. SIGN	AMP MNL	3	561667	561550
C 372	FRONT ROOF – ELECTRICAL DEST. SIGN	MOLEX	4	561477	561476
C 373					
C 374					
C 375					
C 376					
C 377	LH SWITCH PANEL – STOP ENGINE OVERIDE	EATON	12		562763
C 378					
C 379	LUGGAGE COMPT. – WINDOW AJAR SW.	MOLEX	4	561477	561476
C 380					
C 381	UNDER DASH PANEL – ANTI THILED	AMP MNL	2	561248	561247
C 382	ENGINE GENERATOR (1)	PED WP	1	561605	561577
C 383	ENGINE COMPT – VOLTAGE REGULATOR	PED WP	1	561605	561577
C 384					
C 385	BATT. COMPT. – BJB INTERFACE	AMP MNL	12	561735	561736
C 386	LH SWITCH PANEL – W.C.LIFT	EATON	12		562763
C 387	EVAPORATOR COMPT. - BY–PASS VALVE	PED WP	2	561566	561690
C 387	BATTERY COMPT. – WCL ACCES.	AMP CPC	16	561639	561640
C 388	LUGG. COMPT.(4) – WCL DOOR ACCESS.	AMP MNL	12	561735	561736
C 389	EVAPORATOR COMPT. – WATER PUMP	PED WP	2	561566	561690
C 390	EVAPORATOR COMPT. – A/C JCT. BOX	DEUTSCH	24	562280	562283
C 391	CONDENSER COMPT. A/C PRESS SW 2 SP	PED WP	2	561566	561690
C 392					
C 393					
C 394	UNDER DASH - B/U MONITOR	AMP MNL	4	560851	560852
C 395	UNDER DASH - B/U MONITOR	CLARION	4		990335
C 396	PARCEL RACK – SPEAKER FEEDING	MOLEX	4	562507	562503
C 397					
C 398					
C 399	ENGINE GENERATOR (2)	PED WP	2	561566	561690
C 400	ENGINE COMPT. – BLOCK HEATER	PED WP	3	561781	561782
C 401					
C 402					
C 403	GALLEY – REFRIGERATOR		2		
C 404	GALLEY – LAMP SWITCH		2		
C 405	INVERTER SIGNAL	AMP MNL	2	561248	561247
C 406					
C 407					
C 408					
C 409					
C 410					
C 411					
C 412					
C 413					
C 414					
C 415					
C 416					
C 417					
C 418					
C 419	FR JCT BOX – RET/JAKE SELECTION	AMP MNL	3	561667	561550
C 420					
C 421	ENGINE COMPT. - WEBASTO	AMP FF	2	562473	562474
C 422	ENGINE COMPT. - WEBASTO	PED	2	562644	561597
C 423					
C 424	UNDER DASH – AUDIBLE FLASHER	AMP MNL	3	561667	561550
C 425					
C 426	ENGINE S60 RAD. FAN CLUTCH	PED WP	3	561781	561782
C 427					
C 428	RH SW PANEL – DASH LTS RHEOSTAT	AMP MNL	3	561667	561550
C 429					
C 430	LH CONSOLE – PRE-HEAT TIMER	AMP FF	8	561188	562363
C 431	LH CONSOLE – PRE-HEAT TIMER		1		560488
C 432					

NO	LOCATION	TYPE	CAVITY	#PIN HOUSING	#SOCKET HOUSING
C 433					
C 434					
C 435					
C 436					
C 437					
C 438					
C 439					
C 440					
C 441					
C 442					
C 443					
C 444					
C 445					
C 446					
C 447					
C 448					
C 449					
C 450	S.S. PANEL - FEEDING	MOLEX	4	562507	562503
C 451	S.S. PANEL - FEEDING	MOLEX	2	562550	562549
C 452	UNDER DASH – S.S. ACC. SIGNAL	MOLEX	2	562550	562549
C 453	S. S. PANEL – VCR FEEDING	PED WP	2	561566	561690
C 454	S. S. PANEL – VCR FEEDING	PED WP	2	561566	561690
C 455	PARCEL RACK – WIRELESS MICROPHONE	MOLEX	6		562464
C 456	WORLD TRANS. - RETARDER ACCUM.	PED MP	2		562427
C 457	WORLD TRANS. - MAIN CONNECTOR	DEUTSCH	31	562572	562536
C 458	WORLD TRANS. - TURBINE SP. SENS.	PED MP	2		562426
C 459	WORLD TRANS. - ENGINE SP. SENS.	PED MP	2		562426
C 460	WORLD TRANS. - SPEED SENSOR	ITT	2		562541
C 461	WORLD TRANS. - RETARDER TEMP.	PED MP	2		562856
C 462	WORLD TRANS. - RETARDER SOL. "K"	PED MP	2		562426
C 463	WORLD TRANS. - SENSOR CONN.	DEUTSCH	16	562570	562571
C 464	RR JCT BOX - DDL CONN	DEUTSCH	6		565360
C 465	LH CONSOLE - SHIFTER SELECTOR	PED	20		562825
C 466	FR SERVICE CPT - RESIS. MOD.	PED WP	3		562428
C 467	FR SERVICE CPT - RESIS. MOD.	PED WP	3		562428
C 468	STEERING COLUMN – RET. HAND LEVER	AMP FF	8	561188	562363
C 469	FR SERVICE COMPT. – RESIS. MOD.	AMP FF	8	561188	562363
C 470					
C 471					
C 472	FR SERVICE CPT – SILENT 1000 OR EATON	PED WP	2	561566	561690
C 473					
C 474	DRIVER'S TEMP SENSOR	AMP MNL	2	561248	561247
C 475	FR SERVICE CPT - SPEED SIGN. CONNECT.	DEUTSCH	6	562583	562581
C 475M	FR SERVICE CPT – SPEED SIGN. W. TR.	DEUTSCH	6	562583	562581
C 475W	FR SERVICE CPT – SPEED SIGN. W. TR.	DEUTSCH	6	562583	562581
C 476					
C 477					
C 478	FRONT ROOF – ELECTRONIC DEST. SIGN	AMP CPC	9	561636	561637
C 479	UNDER DASH – HVAC DASH MODULE	MOLEX	3		562783
C 480	UNDER DASH RH – DR'S FAN SPEED CTR	PED WP	4	561889	561890
C 481	UNDER DASH RH – DR'S FAN SPEED CTR	PED WP	3	561781	561782
C 482					
C 483	FR SERVICE CPT – ELECTRICAL SEAT	PED	2	562237	
C 484	UNDER DASH LH – FOOT DAMPER MOTOR	PED	2		562076
C 485	UNDER DASH LH – DASH & DEFR. DAMP. M.	AMP MNL	3	561667	561558
C 486	WCL ROOF DOOR – DOOR LT.	LEECRAFT	2	------	562803
C 487	S.S PANEL – AUDIO IN AMPLI	MOLEX	4	------	563071
C 488	S.S PANEL – AMPLI SIGNAL	MOLEX	8	------	562465
C 489	S.S PANEL – SPEAKER OUTLET	MOLEX	6	------	562464
C 490					
C 491					
C 492					
C 493					
C 494					
C 495					

CONNECTORS CODE

NO	LOCATION	TYPE	CAVITY	#PIN HOUSING	#SOCKET HOUSING
C 496					
C 497					
C 498					
C 499					
C 500	FR JCT PANEL - PRODRIVER	MOLEX	6	562070	562069
C 501					
C 502	LH DASH PANEL – PRE- HEAT SW.	EATON	12		562763
C 503	LH CONSOLE-PR0HEAT TIMER	PED MP	6	------	562878
C 504	LH CONSOLE -WEBASTO TIMER	AMP	8	------	562852
C 505	LH CONSOLE -ESPAR TIMER	AMP	12	------	562681
C 506	FR JCT BOX – DIGITAL CLOCK	AMP CPC	4	561685	561687
C 507	LH HAT RACK – DIGITAL CLOCK	MOLEX	4	561477	561476
C 508	RR JCT BOX - FAN CLUTCH RETARDER	AMP MNL	6	561552	561515
C 509	EVAP. COMPT. – NOT USED	DEUTSCH	5		562566
C 515	FR JCT BOX CPT. - INTERCOM	MOLEX	4	561477	561476
C 516	FR JCT BOX CPT. - INTERCOM	MOLEX	6	562070	562069
C 517	LAVATORY WALL - INTERCOM	MOLEX	6	562070	562069
C 519A	RH UNDER DASH – ENTRANCE DOOR SOL.	PNEUMAC	3		641385
C 519B	RH UNDER DASH – ENTRANCE DOOR SOL.	PNEUMAC	3		641385
C 520	RH UNDER DASH – ENTRANCE DOOR SOL.	PNEUMAC	3		641385
C 521	RH UNDER DASH – ENTRANCE DOOR SOL.	PNEUMAC	3		641385
C 522	FR JCT BOX – DAYTIME LTS MODULE	BOSCH	5		561183
C 523	FR JCT BOX – FUSE BLOCK	PED	8	562647	562646
C 524	FR JCT BOX – FUSE BLOCK	PED	8	562647	562646
C 525	FR JCT BOX – FUSE BLOCK	PED	8	562647	562646
C 526	FR JCT BOX – FUSE BLOCK	PED	8	562647	562646
C 527	FR JCT BOX – FUSE BLOCK	PED	8	562647	562646
C 528					
C 529					
C 530	RR JCT BOX – FUSE BLOCK	PED	8	562647	562646
C 531	RR JCT BOX – FUSE BLOCK	PED	8	562647	562646
C 532	LH PARCEL RACK – A/C LIQ. SOL.	AMP MNL	2	561248	561247
C 533	RH PARCEL RACK – A/C LIQ. SOL.	AMP MNL	2	561248	561247
C 534					
C 535					
C 536					
C 537	A/C JCT BOX RESISTOR SIGN. RLY	AMP MNL	2	561248	561247
C 538	FR SERV. CPT RH – OUTSIDE TEMP. SENS	AMP MNL	2	561248	561247
C 539	HVAC DASH MODULE OUTPUT CONN.	MOLEX	24		562780
C 540	HVAC DASH MODULE INPUT CONN.	MOLEX	22		562781
C 541					
C 542					
C 543					
C 544	S.S. PANEL – AUDIO SEAT	PED WP	3	561781	561782
C 545					
C 546	FR. JCT BOX – CHARGER WIRELESS MIC.	MOLEX	2		563025
C 547					
C 548	LH DASH PANEL – T.T.LT TEST SW.	EATON	12		562763
C 549	LH DASH PANEL – ENGINE FAN OVERRIDE	EATON	12		562763
C 550	LAST LUGG. CPT. -WCL MODULE	AMP CPC	16	561694	561695
C 551	LAST LUGG. CPT. -WCL REMOTE	AMP CPC	9	561636	561637
C 552					
C 553	UNDER DASH – S.S. CONTROL HEAD	MOLEX	16		562559
C 554	UNDER DASH – S.S. CONTROL HEAD	MOLEX	16		562559
C 555	UNDER DASH – S.S. CONTROL HEAD	MOLEX	16		562559
C 556	UNDER DASH – RADIO FEEDING	MOLEX	2	562550	562549
C 557	UNDER DASH – RADIO FEEDING	MOLEX	9	562556	562555
C 558	FR. SERV. COMPT. – MIC. OUTLET	MOLEX	4	562507	562503
C 559					
C 560					
C 561	LH PARCEL RACK – WIRELESS MIC.	MOLEX	8		562465
C 562	LH PARCEL RACK – VCR SIGNAL	MOLEX	12		563070
C 563	FR. SERV. COMPT. – DRIVER SPEAKER	MOLEX	4	562507	562503
C 564	FR. SERV. COMPT. – MIC. OUTLET	MOLEX	4	562507	562503
C 565	FR. SERV. COMPT. – MIC. OUTLET	MOLEX	4	562507	562503

NO	LOCATION	TYPE	CAVITY	#PIN HOUSING	#SOCKET HOUSING
C 566	FR. SERV. COMPT. – MIC. OUTLET	MOLEX	4	562507	562503
C 567	FR. SERV. COMPT. – MIC. OUTLET	MOLEX	4	562507	562503
C 568	S.S. PANEL – SPEAKER OUTLET	CINTCH	4	562553	
C 569	S. S. PANEL – AMPLI SIGNAL	MOLEX	9	562556	562555
C 570	UNDER DASH PANEL – T.T.LT MODULE	MOLEX	6		562464
C 571	UNDER DASH PANEL – T.T.LT MODULE	MOLEX	20		562778
C 572	UNDER DASH PANEL – T.T.LT MODULE	MOLEX	18		562779
C 573	UNDER DASH PANEL – T.T.LT MODULE	MOLEX	8		562465
C 574	PARCEL RACK – INDIRECT LTS BALLAST	MOLEX			562759
C 575	RH PARCEL RACK - FFEDING	MOLEX	4	562507	562503
C 576	RH PARCEL RACK - FFEDING	AMP MNL	3	561667	561550
C 577	LH PARCEL RACK - FFEDING	AMP MNL	3	561667	561550
C 578	LH PARCEL RACK - FFEDING	MOLEX	4	562507	562503
C 579	LHPARCEL RACK-VCR POWER	MOLEX	4		563071
C 580	LH DASH PANEL – PARCEL RACK A/C SW.	EATON	12		562763
C 581	LH DASH PANEL – ELECTRICAL HORN	PED MP	2		562777
C 582					
C 583	LH DASH PANEL – MASTER KEY SW.	DEUTSCH	2	562486	562485
C 584	FR. SERVICE COMPT – HORN PNEU. VALVE	PNEUMAC	3		562848
C 585					
C 586	FR SERVICE COMPT – ACC. PNEU.VALVE	PNEUMAC	3		562848
C 587	LH PARCEL RACK DVD UNIT	MOLEX	4	563040	563071
C 588	FR SERV. COMPT. – S.S. INTERFACE	AMP CPC	37	561645	561646
C 589	FR. MIRROR LH	CONXALL	8	563163	563088
C 590	FR. MIRROR RH	CONXALL	8	563163	563088
C 591	LH CONSOLE – LH MIRROR SW.	EURAMT.	8		562749
C 592	LH CONSOLE – RH MIRROR SW.	EURAMT.	8		562749
C 594	FRONT ROOF – DRIVER'S LTS	LEEKRAFT	2	------	562803
C 595	RH DASH PANEL – ENTRANCE DOOR SW.	MOLEX	4	562507	562503
C 596	RH DASH PANEL – ENTRANCE DOOR SW.	MOLEX	4	562507	562503
C 597	LH DASH PANEL – DISPLAY SET SW.	AMP	5		562905
C 598	LH DASH PANEL – DISPLAY SET SW.	AMP	5		562905
C 599	UND. DASH – MAGN. SW CTR POS. DR'S AIR	AMP MNL	2	561248	561247
C 604	LH PARCEL RACK DVD VIDEO STABILIZER	SWITCHCRAFT	1	563074	
C 605	LH PARCEL RACK – A/C UNIT	AMP MNL	6	561552	561515
C 606	RH PARCEL RACK – A/C UNIT	AMP MNL	6	561552	561515
C 607					
C 608	FR SERV. COMPT – SPEED SIGNAL (SPARE)	PED WP	2	561566	561690
C 609					
C 610					
C 611	RH PARCEL RACK READING LTS WCL	MOLEX	6	562558	562557
C 612	RH PARCEL RACK LUOR. INSTATION LTS WCL	MOLEX	4	562507	562503
C 613	RH PARCEL RACK INDIRECT LTS WCL	AMP MNL	3	561667	561550
C 614	RH PARCEL RACK INDIRECT LTS WCL	AMP MNL	3	561667	561550
C 615	LH PARCEL RACK DVD SIGN ALONG ADAPTOR	MOLEX	2	562550	562549
C 701	ZF TRANSMISSION ECU	KOSTAL	20		
C 702	SHIFT SELECTOR – LH CONSOLE	AMP	14		563338
C 712	NEUTRAL SWITCH ON ZF TRANSM. (TOP)	AMP	4		563340
C 714	OUTPUT SENSOR ON ZF TRANSM. (BOTTOM)	AMP	4		563340
C 717	FR SERV. COMPT – MAIN CONN.	AMP CPC	22	561642	561643
C 720	ENGINE COMPT – BLKHD CONNECTOR	DEUTSCH	31	563359	563358
C 721					
C 723	ENGINE COMPT – FOR TRANSM.	DEUTSCH	3		562884
C 736	FR SERV. COMPT – ZMTEC MODULE	PACKARD	30	563053	
C 740	ABOVE DRIVE AXLE – EASY START SOL VALVE	LEONI	2		641949
C 742	REAR JCT BOX - FUSE BLOCK	AMP	8	562446	
C 745	FR SERV COMPT – THROTTLE POS. SENSOR	PED WP	3	561781	
C 760	ENGINE COMPT – TO J1939	DEUTSCH	3		
C 761	ENGINE COMPT – TO J1939	DEUTSCH	3		562884
C 762	ENGINE COMPT – TO J1939	DEUTSCH	3		562884
C 763	ENGINE COMPT – TO J1939	DEUTSCH	3		562884
C 764	ENGINE COMPT – TO J1939	DEUTSCH	3		562884
C 765	ENGINE COMPT – TO J1939	DEUTSCH	3		562884
C 766	ENGINE COMPT – TO J1939	DEUTSCH	3		562884
CS	FR SERVICE CPT - ECU WOLRD TR.	PED MP	32		562817

CONNECTORS CODE

NO	LOCATION	TYPE	CAVITY	#PIN HOUSING	#SOCKET HOUSING
CT	FR SERVICE CPT - ECU WORLD TR.	PED MP	32		562824
CV	FR SERVICE CPT - ECU WORLD TR.	PED MP	32		562823
CX	CLUSTER	JAE	5		562957
CX 1	FR SERVICE CPT - ECU ABS	AMP JN	15		563200
CX 2	FR SERVICE CPT - ECU ABS	AMP JN	18		563201
CY	CLUSTER	JAE	30		562765
CW X1	ENGINE COMPT. – WATER HEATER	AMP	7	563134	563135
CW X3	ENGINE COMPT. – WATER HEATER	AMP	7	563134	563135
LX	CLUSTER	JAE	22		562766
LY	CLUSTER	JAE	30		562767
RX	CLUSTER	JAE	30		562767
WEB 1	ENGINE COMPT. - WEBASTO	AMP FF	2	562473	562474
WEB 2	ENGINE COMPT. - WEBASTO	AMP FF	2	562643	
ZF 1	FR JCT BOX – STEERING E.C.U.	HELLA	9		562929

NO	LOCATION	TYPE	CAVITY	#PIN HOUSING	#SOCKET HOUSING

CONNECTORS CODE

NO	LOCATION	TYPE	CAVITY	#PIN HOUSING	#SOCKET HOUSING
A 1	UNDER DASH – AUDIO SIGNAL	RCA	1	562090	562330
A 2	UNDER DASH – AUDIO SIGNAL	RCA	1	562090	562330
A 10	UNDER DASH – AUDIO SIGNAL	RCA	1	562090	562330
A 11	UNDER DASH – AUDIO SIGNAL	RCA	1	562090	562330
A 18	S. S. PANEL – AUDIO SIGNAL	RCA	1	562090	562330
A 19	S. S. PANEL – AUDIO SIGNAL	RCA	1	562090	562330
AA 1	UNDER DASH PANEL- SONALERT	BOSCH	5	------	561183
C 1	FR JCT BOX COMPARTIMENT	AMP CPC	14	561585	561584
C 2	FR JCT BOX COMPARTIMENT	AMP CPC	16	561638	561640
C 3	FR JCT BOX COMPARTIMENT	AMP CPC	37	561644	561646
C 4	FR JCT BOX COMPARTIMENT	AMP CPC	24	561641	561643
C 5	FR SERVICE COMPT. - UNDERNEATH	AMP CPC	37	561645	561646
C 6	FR SERVICE COMPT. - UNDERNEATH	AMP CPC	16	561639	561640
C 7	FR SERVICE COMPT - CLUTCH SW	ITT SS	3	561080	561111
C 8	FR SERVICE COMPT. - UNDERNEATH	AMP CPC	24	561642	561643
C 9	FR SERVICE COMPT. - UNDERNEATH	AMP CPC	24	561642	561643
C 10	FR SERVICE DOOR ACCESS.	DEUTSCH	5	562565	562566
C 11	FR SERV. CPT ACCESS	AMP CPC	37	561645	561646
C 12	FR SERV. CPT ACCESS	AMP CPC	16	561639	561640
C 13	FR JCT BOX COMPARTIMENT	AMP MNL	2	561248	561247
C 14	LAST LUGGAGE COMP(4) - DOCKING LTS	AMP MNL	2	561248	561247
C 15	UNDER STAIRS – CORNERING LTS	AMP MNL	2	560900	560898
C 16	LH CONSOLE SW-CRUISE ON/OFF	EATON	12	------	562763
C 17	LH CONSOLE SW-CRUISE RESUME	EATON	12		562763
C 18	LH CONSOLE SW-CRUISE SET	EATON	12		562763
C 19	LH CONSOLE SW-DECEL SW	EATON	12		562763
C 20	RR JCT BOX	DEUTSCH	70	562282	562285
C 21	ENGINE COMPT - LOCK DOOR MOT.	PED WP	2		562076
C 22	LUGGAGE COMPT (A) - A/C & FUEL TANK	AMP CPC	16	561639	561640
C 23	LUGGAGE COMPT (1) – LUGG. ACCESS.	AMP CPC	24	561642	561643
C 24	ENGINE COMPT. – INTERF RJB	PED WP	6	561606	561607
C 25	ENGINE COMPT. – INTERF RJB	PED WP	6	561606	561607
C 26	ENGINE COMPT. ACCESS	DEUTSCH	40	562281	562284
C 27	ENGINE COMPT. – INTERF. RJB	DEUTSCH	6	562583	562581
C 28	LUGGAGE COMPT(4) – LUGG. ACCESS	AMP CPC	24	561642	561643
C 29	FR SERVICE COMPT – E.C.U. FEED	PED WP	3	561781	561782
C 30	ENGINE COMPT – MASTER SW. SIGN.	DEUTSCH	2	562486	562485
C 31	RR JCT BOX – PARCEL RACK FEEDING	DEUTSCH	31	562572	562536
C 32	ENGINE COMPT. – 12VI FOR OPTION	PED WP	1	-----	561577
C 33	FR SERV. COMPT. – VSS SIGNAL	PED WP	2	561566	561690
C 34	FR JCT BOX EATON TRANS. J1939	DEUTSCH	3	562877	562884
C 35	A/C COMPT - AIR RETURN SENSOR	AMP MNL	2	561248	561247
C 36	UNDER STAIRS – STEP LIGHTS	AMP MNL	2	561248	561247
C 36	RH PARCEL RACK – EMERGENCY LTS	AMP MNL	2	560900	560898
C 37	LH PARCEL RACK - FEEDING	MOLEX	6	562558	562557
C 38	RH PARCEL RACK - FEEDING	MOLEX	6	562558	562557
C 39	ENGINE COMPT. ECM J1939	DEUTSCH	3	562877	562884
C 40					
C 41	ENGINE COMPT – RH DOOR LOCK	DEUTSCH	4	562479	562477
C 42	ENGINE COMPT – RR CAP LIGHTING	DEUTSCH	6	562583	562581
C 43	FR JCT BOX – ALT. MODULE	AMP MNL	12	561735	561734
C 44	ENGINE COMPT - LIGHTS	GROTE	2		563268
C 45	FR JCT BOX COMPT – ROOF ACCESS	AMP CPC	24	561642	561643
C 46	ENGINE COMPT. ECM J1939	DEUTSCH	3	562877	562884
C 47	ENGINE DDEC-ECM J1939	PED MP	6	------	561962
C 48	FR SERV. CPT. PRESS SW PARK BRAKE	PED WP	2	561566	561690
C 49	LAVATORY ROOF – NIGHT LIGHT	AMP MNL	2	560900	560898
C 50	LAVATORY ROOF - LIGHT	LEECRAFT	2	-------	562803
C 50	LH SWITCH PANEL – SAFETY SW.	EATON	12	------	562763
C 51	FR SERV.CPT.PARK. BRAKE SOL. VALVE	PNEUMAC	2	------	641385
C 52	ENGINE COMPT - COMPRESSOR	PED WP	2	561566	561690
C 53	ENGINE COMPT - COMPRESSOR	PED WP	2	561566	561690
C 54	FRONT ROOF – UPPER FAN DEFROST	AMP MNL	6	561552	561515
C 55	CENTRAL DOOR LOCK	DEUTSCH	4	562479	562477
C 56	LH PARCEL RACK - FEEDING	MOLEX	6	562558	562557

NO	LOCATION	TYPE	CAVITY	#PIN HOUSING	#SOCKET HOUSING
C 57	RH PARCEL RACK - FEEDING	MOLEX	6	562558	562557
C 58					
C 59					
C 60					
C 61	ENGINE COMPT - FUEL FILTER	PED WP	2	561566	561690
C 62	ENGINE COMPT – COMPR. AUX. PRESS. SW.	PED WP	2	561566	561690
C 63	ENGINE COMPT – COMPR. AUX. PRESS. SW.	PED WP	2	561566	561690
C 64					
C 65	ENGINE CPT – A/C PRESS SW FAN CLUTCH	PED WP	2	561566	561690
C 66	ENGINE CPT – SPARE CONNECTOR	PED WP	1	561605	561577
C 67					
C 68					
C 69					
C 70	LH CONSOLE	AMP CPC	16	561639	561640
C 71	FR JCT BOX COMPT.	AMP CPC	37	561645	561646
C 72	FR JCT BOX COMPT.	AMP CPC	24	561642	561643
C 73					
C 74	FR JCT BOX COMPT.	AMP CPC	37	561645	561646
C 75	SERVICE COMPT. EXT. ENTRANCE DOOR SW.	DEUTSCH	4	562479	562477
C 75	RH PARCEL RACK – READ. LTS FEED. WCL	MOLEX	6	562558	562557
C 76	ENGINE COMPT. FIRE DETECTOR	DEUTSCH	2	562486	562485
C 77	ENGINE COMPT. FIRE DETECTOR	DEUTSCH	2	562486	562485
C 78					
C 79					
C 80					
C 81	LUGGAGE COMPT - DOOR LOCK	AMP MNL	4	560851	560852
C 82	UNDER SEAT – AISLE LTS	AMP MNL	2	560900	560898
C 82	LUGGAGE COMPT - DOOR LOCK	AMP MNL	4	560851	560852
C 83	LUGGAGE COMPT - DOOR LOCK	AMP MNL	4	560851	560852
C 84	LUGGAGE COMPT - DOOR LOCK	AMP MNL	4	560851	560852
C 85					
C 86					
C 87					
C 88	FR SERV. CPT. PRESS SW PARK BRAKE	PED WP	2	561566	561690
C 89					
C 90					
C 91					
C 92	FR JCT BOX COMPT - ABS	AMP CPC	9	561635	561637
C 93					
C 94					
C 95					
C 96	FR SERVICE DOOR ACCESS	AMP MNL	9	561670	561669
C 97	FR SERVICE DOOR – WATER TANK	PED MP	2		562426
C 98					
C 99	FR SERVICE CPT. LTS	AMP MNL	2	561248	561247
C 100					
C 101	FR SERVICE COMPT. ELEC. HORNS	PED WP	2	561566	561690
C 101	CONDENSER COMPT - A/C PRES. SW 1SP	PED WP	2	561566	561690
C 102	CONDENS. COMPT – LIQU. SOL. VAL. PRES.	PED WP	2	561566	561690
C 103	ENGINE COMPT. – LAVATORY FAN	PED WP	2	561566	561690
C 104	ENGINE COMPT. – LAVATORY PUMP	DEUTSCH	4	562479	562477
C 105	UNDER DASH RH - DRV LIO SOL VL	PED WP	2	561566	561690
C 106	UNDER DASH RH - DRV WTR VALVE	PED WP	2	561566	561690
C 107	ENGINE COMPT- LAVATORY PUSH BUTTON	PED WP	2	561566	561690
C 108	FR. SERICE COMPT – GAZ CYLINDER L.H.	DEUTSCH	2	562486	562485
C 109					
C 110					
C 111					
C 112					
C 113					
C 114	ENGINE DDEC - SPEED SIGNAL	PED WP	2	561566	561690
C 115	RR JCT BOX – ENGINE ACCESS	DEUTSCH	40	562281	562284
C 116					
C 117					
C 118	ENGINE COMPT - LICENCE	DOM. AUT	2	930210	

CONNECTORS CODE

NO	LOCATION	TYPE	CAVITY	#PIN HOUSING	#SOCKET HOUSING
C 119	ENGINE COMPT - RH LOWER LAMP	PED WP	6	561606	561607
C 120	ENGINE COMPT - LH LOWER LAMP	PED WP	6	561606	561607
C 121					
C 122					
C 123					
C 124					
C 125					
C 126					
C 127					
C 128					
C 129					
C 130					
C 131					
C 132					
C 133					
C 134	FR JCT BOX – DIODE CONN.	AMP MNL	15	561987	561986
C 135	FR JCT BOX – DIODE CONN.	AMP MNL	15	561987	561986
C 136	FR JCT BOX – DIODE CONN.	AMP MNL	15	561987	561986
C 137	FR JCT BOX – DIODE CONN.	AMP MNL	15	561987	561986
C 138					
C 139					
C 140	HVAC DASH MODULE THERMOMETER	MOLEX	4		562782
C 141	RR DASH PANEL – LTS CONN. (SPARE)	AMP MNL	2	561248	561247
C 142	ENGINE COMPT. B/U ALARM	PED WP	2	561566	561690
C 143					
C 144	FR JCT BOX – AISLE LTS FEEDING	AMP MNL	2	561248	561247
C 145					
C 146					
C 147					
C 148					
C 149					
C 150					
C 151					
C 152					
C 153					
C 154					
C 155	EVAPORATOR CPT - WATER VALVE	BURKERT	3		563204
C 156					
C 157	FR SERV. CPT – WATER PUMP DR'S	PED WP	3	561781	561782
C 158	ENGINE CPT – DDEC INTERFACE CONNECTOR	DEUTSCH	31	562572	562536
C 159	ENGINE CPT – DDE FEED	PED WP	6	561606	561607
C 160	FR SERVICE CPT - INTERFACE	AMP CPC	37	561644	561646
C 161	ENGINE DDEC - ECM	PED MP	30		561600
C 162	ENGINE DDEC - ACCESSORIES	PED WP	4	561610	561611
C 163	ENGINE CPT - COOLANT PROBE	PED MP	2		562350
C 164					
C 165					
C 166					
C 167	FR SERVICE CPT - EL. FOOT PEDAL	PED WP	3	561781	561782
C 168	FR SERVICE CPT - DDR	DEUTSCH	6	562360	
C 169	FR SERVICE CPT - WORLD TR. INTERFACE	AMP CPC	16	561639	561640
C 169	FR SERV. COMPT. – SPEED SWITCH	AMP	15	562011	562012
C 170	FR JCT BOX FLASHER UNIT	PED	2		561940
C 171	LH CONSOLE	AMP CPC	24	561642	561643
C 172	FR SERVICE COMPT – KNEELING PANEL	AMP CPC	16	561639	561640
C 172	ENGINE COMPT. – WATER TANK HEATER	PED WP	2	561566	561690
C 173					
C 174					
C 175					
C 176	UNDER DASH RH – WIPER PULSE	AMP FF	6		561186
C 177	UNDER DASH RH – WIPER MOTOR	AMP FF	6		561186
C 178					
C 179					
C 180	KNEELING PANEL – DIODE SOCKET	AMP MNL	15	561987	561986
C 181					

NO	LOCATION	TYPE	CAVITY	#PIN HOUSING	#SOCKET HOUSING
C 182					
C 183					
C 184	FR SERV. COMPT. – KNEELING PROX. SW.	ITT SS	3	561080	561111
C 185	KNEELING PANEL – DOWN SOL. VALVE	PNEUMAC	3		641385
C 186					
C 187	FR SERVICE JCT BOX - RESISTORS	AMP MNL	6	561552	561515
C 187	KNEELING PANEL– PARK BRAKE INTERLOCK	PNEUMAC	3		641385
C 188					
C 189	ENGINE COMPT – DOOR LIGHT BACK UP	TRUCK-LITE	2	562755	
C 190	ENGINE COMPT – DOOR LIGHT STOP/TURN	AMP SS	3		562601
C 191	ENGINE COMPT – DOOR LIGHT STOP/TURN	AMP SS	3		562601
C 192	ENGINE COMPT – DOOR LIGHT PARKING	AMP SS	3		562601
C 193					
C 194					
C 195					
C 196	KNEELING PANEL – UP SOL. VALVE	PNEUMAC	3		641385
C 197	KNEELING PANEL – CTR SOL. VALVE	PNEUMAC	3		641385
C 198					
C 199					
C 200	PARCEL RACK – FLUORESCENT LTS	AMP MNL	2	561248	561247
C 201	PARCEL RACK – FLUORESCENT LTS	AMP MNL	2	561248	561247
C 202	RH PARCEL RACK – INDIRECT LTS	MOLEX	2		562758
C 203	PARCEL RACK – FLUORESCENT LTS	MOLEX	6		562759
C 204	RH PARCEL RACK – RACK LTS	AMP MNL	2	560900	560858
C 205	RH PARCEL RACK – FEEDING	AMP MNL	9	561661	561662
C 206	RH PARCEL RACK – FEEDING	AMP FF	4	562760	562756
C 207	LH PARCEL RACK – FEEDING	AMP FF	4	562760	562756
C 208	PARCEL RACK – FLUORESCENT LTS	MOLEX	2		562758
C 209	LH PARCEL RACK – HOTESS CHIME	AMP MNL	3	561667	561550
C 210	LH PARCEL RACK – FEEDING	AMP MNL	9	561661	561662
C 211	FR ROOF – SUN VISOR LH	AMP MNL	2	560900	560898
C 212	FR ROOF – SUN VISOR RH	AMP MNL	2	560900	560898
C 213	WCL DOOR UP HING–DOOR READ & HOST. SW	AMP MNL	6	561552	561515
C 214					
C 215					
C 216					
C 217	RH PANEL SW. – SCENIC VIEW CAMERA	EATON	12		562763
C 218	RH PANEL SW. – LIGHTS SPARE	AMP MNL	2	560900	560898
C 219					
C 220					
C 221					
C 222					
C 223	HEAD LIGHTS - FLASHER	DEUTSCH	5	562565	562566
C 224	HEAD LIGHTS	PED MP	3		562099
C 225	FOG LIGHTS	DEUTSCH	3	562902	562901
C 226	FRONT HEADLIGHTS – MARKER & FLASHER	PED	3	562137	
C 226	BATT. COMPT. – INTERIOR LTS	AMP MNL	2	561248	561247
C 227					
C 228					
C 229	BATT. COMPT. – CHARGER 110V.	PED WP	1	561577	561605
C 230	ENGINE COMPT. – FUEL PRIME PUMP SW.	PED WP	2	561566	561690
C 231	ENGINE COMPT. – FUEL PRIME PUMP	PED WP	2	561566	561690
C 232					
C 233	FIRST LUGGAGE CPT.	VDO	8		562043
C 234	FIRST LUGGAGE CPT.	VDO	8		562044
C 235	FIRST LUGGAGE CPT.	VDO	8		562041
C 236	FIRST LUGGAGE CPT.	AMP MNL	4	560851	560858
C 236	FR SERVICE CPT CENTER - ABS	AMP CPC	14	561636	561637
C 237	FR AXLE CPT - ABS RH SENSOR	WABCO	2	641132	
C 238	FR AXLE CPT - ABS RH VALVE	WABCO	3	641098	
C 239	FR AXLE CPT - ABS LH VALVE	WABCO	3	641098	
C 240	FR AXLE CPT - ABS LH SENSOR	WABCO	2	641132	
C 241	LAST LUGGAGE COMPT - ABS	PED WP	6	561606	561607
C 242	DRIVE AXLE CPT - ABS LH SENSOR	WABCO	2	641132	
C 243	DRIVE AXLE CPT - ABS LH VALVE	WABCO	3	641098	

CONNECTORS CODE

NO	LOCATION	TYPE	CAVITY	#PIN HOUSING	#SOCKET HOUSING
C 244	DRIVE AXLE CPT - ABS RH VALVE	WABCO	3	641098	
C 245	DRIVE AXLE CPT - ABS RH SENSOR	WABCO	2	641132	
C 246	DRIVE AXLE CPT – ATC SOL.	PED WP	2	561566	561690
C 247	E.C.U. EATON TRANS.	PED MP	18		562573
C 248	LAST LUGGAGE CPT - ABS	PED WP	6	561606	561607
C 249	FR SERVICE CPT - ABS/DDEC	PED WP	2	561566	561690
C 250	LH CONSOLE – LOW BOUY	PED WP	2	561566	561690
C 251	LH SW PANEL – FAST IDLE	EATON	12		562763
C 252	LUGGAGE COMPT. – WINDOW AJAR	MOLEX	4	561477	561476
C 253	LH SWITCH PANEL - ETHER	EATON	12		562763
C 254					
C 255	LH SWITCH PANEL – ENGINE BRAKE	EATON	12		562763
C 256					
C 257					
C 258	LH SWITCH PANEL – MULTI FUNC. SW	AMP FF	8	561188	
C 259					
C 259	LH SWITCH PANEL – MULTI FUNC. SW	AMP FF	6		561186
C 260					
C 261					
C 262					
C 263	LUGGAGE COMPT. LTS COMPT #3	AMP MNL	2	561248	561247
C 264	LUGGAGE COMPT. LTS COMPT #2	AMP MNL	2	561248	561247
C 265	LUGGAGE COMPT. LTS COMPT #1	AMP MNL	2	561248	561247
C 266	ENTRACE DOOR KEYLESS	AMP CPC	14	561585	561583
C 267	UNDER DASH RH – ENT. DOOR PANEL	AMP CPC	24	561642	561643
C 268	FR MIRROR RH	CONXALL	5	563091	563090
C 269	FR MIRROR LH	CONXALL	5	563091	563090
C 270	LUGGAGE COMPT LTS - 3 LH	AMP MNL	2	561248	561247
C 271	LUGGAGE COMPT LTS - 4	AMP MNL	2	561248	561247
C 272					
C 273	ENT. DOOR PANEL – DIODE SOCKET	AMP MNL	9	561670	561669
C 274					
C 275	ENT. DOOR PANEL – DIODE SOCKET	AMP MNL	9	561670	561669
C 276					
C 277	RH UNDER DASH – ENT. DOOR REED SW.	AMP MNL	2	560900	560858
C 278	RH PASS. AIR DUCT – ENT DOOR PRESS SW.	PED WP	2	561566	561690
C 279	RH UNDER DASH – ENT. DOOR REED SW.	AMP MNL	2	560900	560858
C 279	FR SERVICE COMPT LH – STEERING ZF	DEUTSCH	2		562485
C 280	ENGINE COMPT – A/C COMPRESSOR AUX.	PED WP	2	561566	561690
C 281					
C 282	FR SERVICE COMPT – STEERING ZF	VOLVO	2		562928
C 283	LH CONSOLE – SPARE SW. LTS	AMP MNL	2	561248	561247
C 284					
C 285					
C 286					
C 287					
C 288					
C 289					
C 290	LUGGAGE CPT - DOOR LOCK	AMP MNL	4	560851	560852
C 291	LUGGAGE CPT - DOOR LOCK	AMP MNL	4	560851	560852
C 292					
C 293					
C 294					
C 295					
C 296					
C 297					
C 298					
C 299	RH SWITCH PANEL - GALLEY	EATON	12		562763
C 300					
C 301					
C 302					
C 303	RR JCT BOX - DIODES	AMP MNL	15	561987	561986
C 304	RR JCT BOX - DIODES	AMP MNL	15	561987	561986
C 305					
C 306					

NO	LOCATION	TYPE	CAVITY	#PIN HOUSING	#SOCKET HOUSING
C 307					
C 308					
C 309	ENGINE DDEC - ECM POWER	PED	4	561610	561611
C 310	LH CONSOLE SW – LUG. DOOR LOCK	EATON	12		562763
C 311	RH SWITCH PANEL – HOTESS CHIME	EATON	12		562763
C 312	ENGINE DDEC - ACCESSORIES	PED WP	3	561781	561782
C 312	RH SWITCH PANEL – READING LAMP	EATON	12		562763
C 313	ENGINE DDEC – INTERFACE	FCI	10	563207	
C 313	RH SWITCH PANEL – INTERIOR LTS	EATON	12		562763
C 314	KNEELING PANEL – PRESS SW.	PED WP	2	561566	561690
C 314	RH SWITCH PANEL – INTERIOR LTS	EATON	12		562763
C 315	LH SWITCH PANEL – LH SUN VISOR SW.	EATON	12		562763
C 316	INTO HORN BOX – KNEELING BUZZER	DEUTSCH	2	562486	562485
C 317	LH SWITCH PANEL – RH SUN VISOR SW.	EATON	12		562763
C 318	LH CONSOLE SW – DR'S WINDOW SW.	EATON	12		562763
C 319	ENGINE DDEC - ECM POWER	PED	4	561610	561611
C 320	RT SWITCH PANEL – DRIVER'S LTS SW.	EATON	12		562763
C 321	UNDER DASH RH - KEYLESS MODULE	AMP COM	26		562676
C 322	UNDER DASH RH - KEYLESS MODULE	AMP COM	22		562675
C 323	DRIVER'S WINDOW MOTOR	PED	2		561848
C 324	LH SWITCH PANEL – UPPER FAN DEFROST	EATON	12		562763
C 325	LH SWITCH PANEL – KNEELING	EATON	12		562763
C 326					
C 327					
C 328	RR ROOF – GALLEY LAMP		2		
C 329					
C 330					
C 331					
C 332					
C 333					
C 334					
C 335					
C 336					
C 337					
C 338					
C 339	KNEELING PANEL – HI BUOY SOL. VALVE	PNEUMAC	3		641385
C 340	FR JCT BOX – FIRE PIEZO ALARM	AMP MNL	2	560900	560898
C 341	LH SWITCH PANEL – HEAT MIRROR SW.	EATON	12		562763
C 342					
C 343	LH SWITCH PANEL – HEAD LAMP SW.	EATON	12		562763
C 344	LH SWITCH PANEL – HAZARD LT SW.	EATON	12		562763
C 345	LH SWITCH PANEL – FOG LT SW.	EATON	12		562763
C 346					
C 347					
C 348	INSTR. PANEL CENT. – RACOR MODULE	MOLEX	6	562070	562069
C 349					
C 350					
C 351					
C 352					
C 353					
C 354					
C 355					
C 356					
C 357					
C 358					
C 359	RH SWITCH PANEL – ENT. DOOR WIND. SW.	EATON	12		562763
C 360	ENTRACE WINDOW MOTOR	PED	2		561848
C 361					
C 362					
C 363					
C 364	FRONT ROOF - ELECTRICAL DEST. SIGN	AMP MNL	3	561667	561550
C 365					
C 366					
C 367					
C 368	FRONT ROOF – ELECTRICAL DEST. SIGN	AMP MNL	3	561667	561550

CONNECTORS CODE

NO	LOCATION	TYPE	CAVITY	#PIN HOUSING	#SOCKET HOUSING
C 369	FRONT ROOF – ELECTRICAL DEST. SIGN	TORRIX	5	562110	
C 370	FRONT ROOF – ELECTRICAL DEST. SIGN	AMP MNL	2	560900	560858
C 371	FRONT ROOF – ELECTRICAL DEST. SIGN	AMP MNL	3	561667	561550
C 372	FRONT ROOF – ELECTRICAL DEST. SIGN	MOLEX	4	561477	561476
C 373					
C 374					
C 375					
C 376					
C 377	LH SWITCH PANEL – STOP ENGINE OVERIDE	EATON	12		562763
C 378					
C 379	LUGGAGE COMPT. – WINDOW AJAR SW.	MOLEX	4	561477	561476
C 380					
C 381	UNDER DASH PANEL – ANTI THILED	AMP MNL	2	561248	561247
C 382	ENGINE GENERATOR (1)	PED WP	1	561605	561577
C 383	ENGINE COMPT – VOLTAGE REGULATOR	PED WP	1	561605	561577
C 384					
C 385	BATT. COMPT. – BJB INTERFACE	AMP MNL	12	561735	561736
C 386	LH SWITCH PANEL – W.C.LIFT	EATON	12		562763
C 387	EVAPORATOR COMPT. - BY–PASS VALVE	PED WP	2	561566	561690
C 387	BATTERY COMPT. – WCL ACCES.	AMP CPC	16	561639	561640
C 388	LUGG. COMPT.(4) – WCL DOOR ACCESS.	AMP MNL	12	561735	561736
C 389	EVAPORATOR COMPT. – WATER PUMP	PED WP	2	561566	561690
C 390	EVAPORATOR COMPT. – A/C JCT. BOX	DEUTSCH	24	562280	562283
C 391	CONDENSER COMPT. A/C PRESS SW 2 SP	PED WP	2	561566	561690
C 392					
C 393					
C 394	UNDER DASH - B/U MONITOR	AMP MNL	4	560851	560852
C 395	UNDER DASH - B/U MONITOR	CLARION	4		990335
C 396	PARCEL RACK – SPEAKER FEEDING	MOLEX	4	562507	562503
C 397					
C 398					
C 399	ENGINE GENERATOR (2)	PED WP	2	561566	561690
C 400	ENGINE COMPT. – BLOCK HEATER	PED WP	3	561781	561782
C 401					
C 402					
C 403	GALLEY – REFRIGERATOR		2		
C 404	GALLEY – LAMP SWITCH		2		
C 405	INVERTER SIGNAL	AMP MNL	2	561248	561247
C 406					
C 407					
C 408					
C 409					
C 410					
C 411					
C 412					
C 413					
C 414					
C 415					
C 416					
C 417					
C 418					
C 419	FR JCT BOX – RET/JAKE SELECTION	AMP MNL	3	561667	561550
C 420					
C 421	ENGINE COMPT. - WEBASTO	AMP FF	2	562473	562474
C 422	ENGINE COMPT. - WEBASTO	PED	2	562644	561597
C 423					
C 424	UNDER DASH – AUDIBLE FLASHER	AMP MNL	3	561667	561550
C 425					
C 426	ENGINE S60 RAD. FAN CLUTCH	PED WP	3	561781	561782
C 427					
C 428	RH SW PANEL – DASH LTS RHEOSTAT	AMP MNL	3	561667	561550
C 429					
C 430	LH CONSOLE – PRE-HEAT TIMER	AMP FF	8	561188	562363
C 431	LH CONSOLE – PRE-HEAT TIMER		1		560488
C 432					

NO	LOCATION	TYPE	CAVITY	#PIN HOUSING	#SOCKET HOUSING
C 433					
C 434					
C 435					
C 436					
C 437					
C 438					
C 439					
C 440					
C 441					
C 442					
C 443					
C 444					
C 445					
C 446					
C 447					
C 448					
C 449					
C 450	S.S. PANEL - FEEDING	MOLEX	4	562507	562503
C 451	S.S. PANEL - FEEDING	MOLEX	2	562550	562549
C 452	UNDER DASH – S.S. ACC. SIGNAL	MOLEX	2	562550	562549
C 453	S. S. PANEL – VCR FEEDING	PED WP	2	561566	561690
C 454	S. S. PANEL – VCR FEEDING	PED WP	2	561566	561690
C 455	PARCEL RACK – WIRELESS MICROPHONE	MOLEX	6		562464
C 456	WORLD TRANS. - RETARDER ACCUM.	PED MP	2		562427
C 457	WORLD TRANS. - MAIN CONNECTOR	DEUTSCH	31	562572	562536
C 458	WORLD TRANS. - TURBINE SP. SENS.	PED MP	2		562426
C 459	WORLD TRANS. - ENGINE SP. SENS.	PED MP	2		562426
C 460	WORLD TRANS. - SPEED SENSOR	ITT	2		562541
C 461	WORLD TRANS. - RETARDER TEMP.	PED MP	2		562856
C 462	WORLD TRANS. - RETARDER SOL. "K"	PED MP	2		562426
C 463	WORLD TRANS. - SENSOR CONN.	DEUTSCH	16	562570	562571
C 464	RR JCT BOX - DDL CONN	DEUTSCH	6		565360
C 465	LH CONSOLE - SHIFTER SELECTOR	PED	20		562825
C 466	FR SERVICE CPT - RESIS. MOD.	PED WP	3		562428
C 467	FR SERVICE CPT - RESIS. MOD.	PED WP	3		562428
C 468	STEERING COLUMN – RET. HAND LEVER	AMP FF	8	561188	562363
C 469	FR SERVICE COMPT. – RESIS. MOD.	AMP FF	8	561188	562363
C 470					
C 471					
C 472	FR SERVICE CPT – SILENT 1000 OR EATON	PED WP	2	561566	561690
C 473					
C 474	DRIVER'S TEMP SENSOR	AMP MNL	2	561248	561247
C 475	FR SERVICE CPT - SPEED SIGN. CONNECT.	DEUTSCH	6	562583	562581
C 475M	FR SERVICE CPT – SPEED SIGN. W. TR.	DEUTSCH	6	562583	562581
C 475W	FR SERVICE CPT – SPEED SIGN. W. TR.	DEUTSCH	6	562583	562581
C 476					
C 477					
C 478	FRONT ROOF – ELECTRONIC DEST. SIGN	AMP CPC	9	561636	561637
C 479	UNDER DASH – HVAC DASH MODULE	MOLEX	3		562783
C 480	UNDER DASH RH – DR'S FAN SPEED CTR	PED WP	4	561889	561890
C 481	UNDER DASH RH – DR'S FAN SPEED CTR	PED WP	3	561781	561782
C 482					
C 483	FR SERVICE CPT – ELECTRICAL SEAT	PED	2	562237	
C 484	UNDER DASH LH – FOOT DAMPER MOTOR	PED	2		562076
C 485	UNDER DASH LH – DASH & DEFR. DAMP. M.	AMP MNL	3	561667	561558
C 486	WCL ROOF DOOR – DOOR LT.	LEECRAFT	2	------	562803
C 487	S.S PANEL – AUDIO IN AMPLI	MOLEX	4	------	563071
C 488	S.S PANEL – AMPLI SIGNAL	MOLEX	8	------	562465
C 489	S.S PANEL – SPEAKER OUTLET	MOLEX	6	------	562464
C 490					
C 491					
C 492					
C 493					
C 494					
C 495					

CONNECTORS CODE

NO	LOCATION	TYPE	CAVITY	#PIN HOUSING	#SOCKET HOUSING
C 496					
C 497					
C 498					
C 499					
C 500	FR JCT PANEL - PRODRIVER	MOLEX	6	562070	562069
C 501					
C 502	LH DASH PANEL – PRE- HEAT SW.	EATON	12		562763
C 503	LH CONSOLE-PR0HEAT TIMER	PED MP	6	------	562878
C 504	LH CONSOLE -WEBASTO TIMER	AMP	8	------	562852
C 505	LH CONSOLE -ESPAR TIMER	AMP	12	------	562681
C 506	FR JCT BOX – DIGITAL CLOCK	AMP CPC	4	561685	561687
C 507	LH HAT RACK – DIGITAL CLOCK	MOLEX	4	561477	561476
C 508	RR JCT BOX - FAN CLUTCH RETARDER	AMP MNL	6	561552	561515
C 509	EVAP. COMPT. – NOT USED	DEUTSCH	5		562566
C 515	FR JCT BOX CPT. - INTERCOM	MOLEX	4	561477	561476
C 516	FR JCT BOX CPT. - INTERCOM	MOLEX	6	562070	562069
C 517	LAVATORY WALL - INTERCOM	MOLEX	6	562070	562069
C 519A	RH UNDER DASH – ENTRANCE DOOR SOL.	PNEUMAC	3		641385
C 519B	RH UNDER DASH – ENTRANCE DOOR SOL.	PNEUMAC	3		641385
C 520	RH UNDER DASH – ENTRANCE DOOR SOL.	PNEUMAC	3		641385
C 521	RH UNDER DASH – ENTRANCE DOOR SOL.	PNEUMAC	3		641385
C 522	FR JCT BOX – DAYTIME LTS MODULE	BOSCH	5		561183
C 523	FR JCT BOX – FUSE BLOCK	PED	8	562647	562646
C 524	FR JCT BOX – FUSE BLOCK	PED	8	562647	562646
C 525	FR JCT BOX – FUSE BLOCK	PED	8	562647	562646
C 526	FR JCT BOX – FUSE BLOCK	PED	8	562647	562646
C 527	FR JCT BOX – FUSE BLOCK	PED	8	562647	562646
C 528					
C 529					
C 530	RR JCT BOX – FUSE BLOCK	PED	8	562647	562646
C 531	RR JCT BOX – FUSE BLOCK	PED	8	562647	562646
C 532	LH PARCEL RACK – A/C LIQ. SOL.	AMP MNL	2	561248	561247
C 533	RH PARCEL RACK – A/C LIQ. SOL.	AMP MNL	2	561248	561247
C 534					
C 535					
C 536					
C 537	A/C JCT BOX RESISTOR SIGN. RLY	AMP MNL	2	561248	561247
C 538	FR SERV. CPT RH – OUTSIDE TEMP. SENS	AMP MNL	2	561248	561247
C 539	HVAC DASH MODULE OUTPUT CONN.	MOLEX	24		562780
C 540	HVAC DASH MODULE INPUT CONN.	MOLEX	22		562781
C 541					
C 542					
C 543					
C 544	S.S. PANEL – AUDIO SEAT	PED WP	3	561781	561782
C 545					
C 546	FR. JCT BOX – CHARGER WIRELESS MIC.	MOLEX	2		563025
C 547					
C 548	LH DASH PANEL – T.T.LT TEST SW.	EATON	12		562763
C 549	LH DASH PANEL – ENGINE FAN OVERRIDE	EATON	12		562763
C 550	LAST LUGG. CPT. -WCL MODULE	AMP CPC	16	561694	561695
C 551	LAST LUGG. CPT. -WCL REMOTE	AMP CPC	9	561636	561637
C 552					
C 553	UNDER DASH – S.S. CONTROL HEAD	MOLEX	16		562559
C 554	UNDER DASH – S.S. CONTROL HEAD	MOLEX	16		562559
C 555	UNDER DASH – S.S. CONTROL HEAD	MOLEX	16		562559
C 556	UNDER DASH – RADIO FEEDING	MOLEX	2	562550	562549
C 557	UNDER DASH – RADIO FEEDING	MOLEX	9	562556	562555
C 558	FR. SERV. COMPT. – MIC. OUTLET	MOLEX	4	562507	562503
C 559					
C 560					
C 561	LH PARCEL RACK – WIRELESS MIC.	MOLEX	8		562465
C 562	LH PARCEL RACK – VCR SIGNAL	MOLEX	12		563070
C 563	FR. SERV. COMPT. – DRIVER SPEAKER	MOLEX	4	562507	562503
C 564	FR. SERV. COMPT. – MIC. OUTLET	MOLEX	4	562507	562503
C 565	FR. SERV. COMPT. – MIC. OUTLET	MOLEX	4	562507	562503

NO	LOCATION	TYPE	CAVITY	#PIN HOUSING	#SOCKET HOUSING
C 566	FR. SERV. COMPT. – MIC. OUTLET	MOLEX	4	562507	562503
C 567	FR. SERV. COMPT. – MIC. OUTLET	MOLEX	4	562507	562503
C 568	S.S. PANEL – SPEAKER OUTLET	CINTCH	4	562553	
C 569	S. S. PANEL – AMPLI SIGNAL	MOLEX	9	562556	562555
C 570	UNDER DASH PANEL – T.T.LT MODULE	MOLEX	6		562464
C 571	UNDER DASH PANEL – T.T.LT MODULE	MOLEX	20		562778
C 572	UNDER DASH PANEL – T.T.LT MODULE	MOLEX	18		562779
C 573	UNDER DASH PANEL – T.T.LT MODULE	MOLEX	8		562465
C 574	PARCEL RACK – INDIRECT LTS BALLAST	MOLEX			562759
C 575	RH PARCEL RACK - FFEDING	MOLEX	4	562507	562503
C 576	RH PARCEL RACK - FFEDING	AMP MNL	3	561667	561550
C 577	LH PARCEL RACK - FFEDING	AMP MNL	3	561667	561550
C 578	LH PARCEL RACK - FFEDING	MOLEX	4	562507	562503
C 579	LHPARCEL RACK-VCR POWER	MOLEX	4		563071
C 580	LH DASH PANEL – PARCEL RACK A/C SW.	EATON	12		562763
C 581	LH DASH PANEL – ELECTRICAL HORN	PED MP	2		562777
C 582					
C 583	LH DASH PANEL – MASTER KEY SW.	DEUTSCH	2	562486	562485
C 584	FR. SERVICE COMPT – HORN PNEU. VALVE	PNEUMAC	3		562848
C 585					
C 586	FR SERVICE COMPT – ACC. PNEU.VALVE	PNEUMAC	3		562848
C 587	LH PARCEL RACK DVD UNIT	MOLEX	4	563040	563071
C 588	FR SERV. COMPT. – S.S. INTERFACE	AMP CPC	37	561645	561646
C 589	FR. MIRROR LH	CONXALL	8	563163	563088
C 590	FR. MIRROR RH	CONXALL	8	563163	563088
C 591	LH CONSOLE – LH MIRROR SW.	EURAMT.	8		562749
C 592	LH CONSOLE – RH MIRROR SW.	EURAMT.	8		562749
C 594	FRONT ROOF – DRIVER'S LTS	LEEKRAFT	2	------	562803
C 595	RH DASH PANEL – ENTRANCE DOOR SW.	MOLEX	4	562507	562503
C 596	RH DASH PANEL – ENTRANCE DOOR SW.	MOLEX	4	562507	562503
C 597	LH DASH PANEL – DISPLAY SET SW.	AMP	5		562905
C 598	LH DASH PANEL – DISPLAY SET SW.	AMP	5		562905
C 599	UND. DASH – MAGN. SW CTR POS. DR'S AIR	AMP MNL	2	561248	561247
C 604	LH PARCEL RACK DVD VIDEO STABILIZER	SWITCHCRAFT	1	563074	
C 605	LH PARCEL RACK – A/C UNIT	AMP MNL	6	561552	561515
C 606	RH PARCEL RACK – A/C UNIT	AMP MNL	6	561552	561515
C 607					
C 608	FR SERV. COMPT – SPEED SIGNAL (SPARE)	PED WP	2	561566	561690
C 609					
C 610					
C 611	RH PARCEL RACK READING LTS WCL	MOLEX	6	562558	562557
C 612	RH PARCEL RACK LUOR. INSTATION LTS WCL	MOLEX	4	562507	562503
C 613	RH PARCEL RACK INDIRECT LTS WCL	AMP MNL	3	561667	561550
C 614	RH PARCEL RACK INDIRECT LTS WCL	AMP MNL	3	561667	561550
C 615	LH PARCEL RACK DVD SIGN ALONG ADAPTOR	MOLEX	2	562550	562549
C 701	ZF TRANSMISSION ECU	KOSTAL	20		
C 702	SHIFT SELECTOR – LH CONSOLE	AMP	14		563338
C 712	NEUTRAL SWITCH ON ZF TRANSM. (TOP)	AMP	4		563340
C 714	OUTPUT SENSOR ON ZF TRANSM. (BOTTOM)	AMP	4		563340
C 717	FR SERV. COMPT – MAIN CONN.	AMP CPC	22	561642	561643
C 720	ENGINE COMPT – BLKHD CONNECTOR	DEUTSCH	31	563359	563358
C 721					
C 723	ENGINE COMPT – FOR TRANSM.	DEUTSCH	3		562884
C 736	FR SERV. COMPT – ZMTEC MODULE	PACKARD	30	563053	
C 740	ABOVE DRIVE AXLE – EASY START SOL VALVE	LEONI	2		641949
C 742	REAR JCT BOX - FUSE BLOCK	AMP	8	562446	
C 745	FR SERV COMPT – THROTTLE POS. SENSOR	PED WP	3	561781	
C 760	FR SERVICE COMPT – TO J1939	DEUTSCH	3		
C 761	FR SERVICE COMPT – TO J1939	DEUTSCH	3		562884
C 762	ENGINE COMPT – TO J1939	DEUTSCH	3		562884
C 763	ENGINE COMPT – TO J1939	DEUTSCH	3		562884
C 764	ENGINE COMPT – TO J1939	DEUTSCH	3		562884
C 765	ENGINE COMPT – TO J1939	DEUTSCH	3		562884
C 766	ENGINE COMPT – TO J1939	DEUTSCH	3		562884
CS	FR SERVICE CPT - ECU WOLRD TR.	PED MP	32		562817

CONNECTORS CODE

NO	LOCATION	TYPE	CAVITY	#PIN HOUSING	#SOCKET HOUSING
CT	FR SERVICE CPT - ECU WORLD TR.	PED MP	32		562824
CV	FR SERVICE CPT - ECU WORLD TR.	PED MP	32		562823
CX	CLUSTER	JAE	5		562957
CX 1	FR SERVICE CPT - ECU ABS	AMP JN	15		563200
CX 2	FR SERVICE CPT - ECU ABS	AMP JN	18		563201
CY	CLUSTER	JAE	30		562765
CW X1	ENGINE COMPT. – WATER HEATER	AMP	7	563134	563135
CW X3	ENGINE COMPT. – WATER HEATER	AMP	7	563134	563135
LX	CLUSTER	JAE	22		562766
LY	CLUSTER	JAE	30		562767
RX	CLUSTER	JAE	30		562767
WEB 1	ENGINE COMPT. - WEBASTO	AMP FF	2	562473	562474
WEB 2	ENGINE COMPT. - WEBASTO	AMP FF	2	562643	
ZF 1	FR JCT BOX – STEERING E.C.U.	HELLA	9		562929

NO	LOCATION	TYPE	CAVITY	#PIN HOUSING	#SOCKET HOUSING

CONNECTORS CODE

NO	LOCATION	TYPE	CAVITY	#PIN HOUSING	#SOCKET HOUSING
A 1	UNDER DASH – AUDIO SIGNAL	RCA	1	562090	562330
A 2	UNDER DASH – AUDIO SIGNAL	RCA	1	562090	562330
A 10	UNDER DASH – AUDIO SIGNAL	RCA	1	562090	562330
A 11	UNDER DASH – AUDIO SIGNAL	RCA	1	562090	562330
A 18	S. S. PANEL – AUDIO SIGNAL	RCA	1	562090	562330
A 19	S. S. PANEL – AUDIO SIGNAL	RCA	1	562090	562330
AA 1	UNDER DASH PANEL- SONALERT	BOSCH	5	------	561183
C 1	FR JCT BOX COMPARTIMENT	AMP CPC	14	561585	561584
C 2	FR JCT BOX COMPARTIMENT	AMP CPC	16	561638	561640
C 3	FR JCT BOX COMPARTIMENT	AMP CPC	37	561644	561646
C 4	FR JCT BOX COMPARTIMENT	AMP CPC	24	561641	561643
C 5	FR SERVICE COMPT. - UNDERNEATH	AMP CPC	37	561645	561646
C 6	FR SERVICE COMPT. - UNDERNEATH	AMP CPC	16	561639	561640
C 7	FR SERVICE COMPT - CLUTCH SW	ITT SS	3	561080	561111
C 8	FR SERVICE COMPT. - UNDERNEATH	AMP CPC	24	561642	561643
C 9	FR SERVICE COMPT. - UNDERNEATH	AMP CPC	24	561642	561643
C 10	FR SERVICE DOOR ACCESS.	DEUTSCH	5	562565	562566
C 11	FR SERV. CPT ACCESS	AMP CPC	37	561645	561646
C 12	FR SERV. CPT ACCESS	AMP CPC	16	561639	561640
C 13	FR JCT BOX COMPARTIMENT	AMP MNL	2	561248	561247
C 14	LAST LUGGAGE COMP(4) - DOCKING LTS	AMP MNL	2	561248	561247
C 15	UNDER STAIRS – CORNERING LTS	AMP MNL	2	560900	560898
C 16	LH CONSOLE SW-CRUISE ON/OFF	EATON	12	------	562763
C 17	LH CONSOLE SW-CRUISE RESUME	EATON	12		562763
C 18	LH CONSOLE SW-CRUISE SET	EATON	12		562763
C 19	LH CONSOLE SW-DECEL SW	EATON	12		562763
C 20	RR JCT BOX	DEUTSCH	70	562282	562285
C 21	ENGINE COMPT - LOCK DOOR MOT.	PED WP	2		562076
C 22	LUGGAGE COMPT (A) - A/C & FUEL TANK	AMP CPC	16	561639	561640
C 23	LUGGAGE COMPT (1) – LUGG. ACCESS.	AMP CPC	24	561642	561643
C 24	ENGINE COMPT. – INTERF RJB	PED WP	6	561606	561607
C 25	ENGINE COMPT. – INTERF RJB	PED WP	6	561606	561607
C 26	ENGINE COMPT. ACCESS	DEUTSCH	40	562281	562284
C 27	ENGINE COMPT. – INTERF. RJB	DEUTSCH	6	562583	562581
C 28	LUGGAGE COMPT(4) – LUGG. ACCESS	AMP CPC	24	561642	561643
C 29	FR SERVICE COMPT – E.C.U. FEED	PED WP	3	561781	561782
C 30	ENGINE COMPT – MASTER SW. SIGN.	DEUTSCH	2	562486	562485
C 31	RR JCT BOX – PARCEL RACK FEEDING	DEUTSCH	31	562572	562536
C 32	ENGINE COMPT. – 12VI FOR OPTION	PED WP	1	-----	561577
C 33	FR SERV. COMPT. – VSS SIGNAL	PED WP	2	561566	561690
C 34	FR JCT BOX EATON TRANS. J1939	DEUTSCH	3	562877	562884
C 35	A/C COMPT - AIR RETURN SENSOR	AMP MNL	2	561248	561247
C 36	UNDER STAIRS – STEP LIGHTS	AMP MNL	2	561248	561247
C 36	RH PARCEL RACK – EMERGENCY LTS	AMP MNL	2	560900	560898
C 37	LH PARCEL RACK - FEEDING	MOLEX	6	562558	562557
C 38	RH PARCEL RACK - FEEDING	MOLEX	6	562558	562557
C 39	ENGINE COMPT. ECM J1939	DEUTSCH	3	562877	562884
C 40					
C 41	ENGINE COMPT – RH DOOR LOCK	DEUTSCH	4	562479	562477
C 42	ENGINE COMPT – RR CAP LIGHTING	DEUTSCH	6	562583	562581
C 43	FR JCT BOX – ALT. MODULE	AMP MNL	12	561735	561734
C 44	ENGINE COMPT - LIGHTS	GROTE	2		563268
C 45	FR JCT BOX COMPT – ROOF ACCESS	AMP CPC	24	561642	561643
C 46	ENGINE COMPT. ECM J1939	DEUTSCH	3	562877	562884
C 47	ENGINE DDEC-ECM J1939	PED MP	6	------	561962
C 48	FR SERV. CPT. PRESS SW PARK BRAKE	PED WP	2	561566	561690
C 49	LAVATORY ROOF – NIGHT LIGHT	AMP MNL	2	560900	560898
C 50	LAVATORY ROOF - LIGHT	LEECRAFT	2	-------	562803
C 50	LH SWITCH PANEL – SAFETY SW.	EATON	12	------	562763
C 51	FR SERV.CPT.PARK. BRAKE SOL. VALVE	PNEUMAC	2	------	641385
C 52	ENGINE COMPT - COMPRESSOR	PED WP	2	561566	561690
C 53	ENGINE COMPT - COMPRESSOR	PED WP	2	561566	561690
C 54	FRONT ROOF – UPPER FAN DEFROST	AMP MNL	6	561552	561515
C 55	CENTRAL DOOR LOCK	DEUTSCH	4	562479	562477
C 56	LH PARCEL RACK - FEEDING	MOLEX	6	562558	562557

NO	LOCATION	TYPE	CAVITY	#PIN HOUSING	#SOCKET HOUSING
C 57	RH PARCEL RACK - FEEDING	MOLEX	6	562558	562557
C 58					
C 59					
C 60					
C 61	ENGINE COMPT - FUEL FILTER	PED WP	2	561566	561690
C 62	ENGINE COMPT – COMPR. AUX. PRESS. SW.	PED WP	2	561566	561690
C 63	ENGINE COMPT – COMPR. AUX. PRESS. SW.	PED WP	2	561566	561690
C 64					
C 65	ENGINE CPT – A/C PRESS SW FAN CLUTCH	PED WP	2	561566	561690
C 66	ENGINE CPT – SPARE CONNECTOR	PED WP	1	561605	561577
C 67					
C 68					
C 69					
C 70	LH CONSOLE	AMP CPC	16	561639	561640
C 71	FR JCT BOX COMPT.	AMP CPC	37	561645	561646
C 72	FR JCT BOX COMPT.	AMP CPC	24	561642	561643
C 73					
C 74	FR JCT BOX COMPT.	AMP CPC	37	561645	561646
C 75	SERVICE COMPT. EXT. ENTRANCE DOOR SW.	DEUTSCH	4	562479	562477
C 75	RH PARCEL RACK – READ. LTS FEED. WCL	MOLEX	6	562558	562557
C 76	ENGINE COMPT. FIRE DETECTOR	DEUTSCH	2	562486	562485
C 77	ENGINE COMPT. FIRE DETECTOR	DEUTSCH	2	562486	562485
C 78					
C 79					
C 80					
C 81	LUGGAGE COMPT - DOOR LOCK	AMP MNL	4	560851	560852
C 82	UNDER SEAT – AISLE LTS	AMP MNL	2	560900	560898
C 82	LUGGAGE COMPT - DOOR LOCK	AMP MNL	4	560851	560852
C 83	LUGGAGE COMPT - DOOR LOCK	AMP MNL	4	560851	560852
C 84	LUGGAGE COMPT - DOOR LOCK	AMP MNL	4	560851	560852
C 85					
C 86					
C 87					
C 88	FR SERV. CPT. PRESS SW PARK BRAKE	PED WP	2	561566	561690
C 89					
C 90					
C 91					
C 92	FR JCT BOX COMPT - ABS	AMP CPC	9	561635	561637
C 93					
C 94					
C 95					
C 96	FR SERVICE DOOR ACCESS	AMP MNL	9	561670	561669
C 97	FR SERVICE DOOR – WATER TANK	PED MP	2		562426
C 98					
C 99	FR SERVICE CPT. LTS	AMP MNL	2	561248	561247
C 100					
C 101	FR SERVICE COMPT. ELEC. HORNS	PED WP	2	561566	561690
C 101	CONDENSER COMPT - A/C PRES. SW 1SP	PED WP	2	561566	561690
C 102	CONDENS. COMPT – LIQU. SOL. VAL. PRES.	PED WP	2	561566	561690
C 103	ENGINE COMPT. – LAVATORY FAN	PED WP	2	561566	561690
C 104	ENGINE COMPT. – LAVATORY PUMP	DEUTSCH	4	562479	562477
C 105	UNDER DASH RH - DRV LIO SOL VL	PED WP	2	561566	561690
C 106	UNDER DASH RH - DRV WTR VALVE	PED WP	2	561566	561690
C 107	ENGINE COMPT- LAVATORY PUSH BUTTON	PED WP	2	561566	561690
C 108	FR. SERICE COMPT – GAZ CYLINDER L.H.	DEUTSCH	2	562486	562485
C 109					
C 110					
C 111					
C 112					
C 113					
C 114	ENGINE DDEC - SPEED SIGNAL	PED WP	2	561566	561690
C 115	RR JCT BOX – ENGINE ACCESS	DEUTSCH	40	562281	562284
C 116					
C 117					
C 118	ENGINE COMPT - LICENCE	DOM. AUT	2	930210	

CONNECTORS CODE

NO	LOCATION	TYPE	CAVITY	#PIN HOUSING	#SOCKET HOUSING
C 119	ENGINE COMPT - RH LOWER LAMP	PED WP	6	561606	561607
C 120	ENGINE COMPT - LH LOWER LAMP	PED WP	6	561606	561607
C 121					
C 122					
C 123					
C 124					
C 125					
C 126					
C 127					
C 128					
C 129					
C 130					
C 131					
C 132					
C 133					
C 134	FR JCT BOX – DIODE CONN.	AMP MNL	15	561987	561986
C 135	FR JCT BOX – DIODE CONN.	AMP MNL	15	561987	561986
C 136	FR JCT BOX – DIODE CONN.	AMP MNL	15	561987	561986
C 137	FR JCT BOX – DIODE CONN.	AMP MNL	15	561987	561986
C 138					
C 139					
C 140	HVAC DASH MODULE THERMOMETER	MOLEX	4		562782
C 141	RR DASH PANEL – LTS CONN. (SPARE)	AMP MNL	2	561248	561247
C 142	ENGINE COMPT. B/U ALARM	PED WP	2	561566	561690
C 143					
C 144	FR JCT BOX – AISLE LTS FEEDING	AMP MNL	2	561248	561247
C 145					
C 146					
C 147					
C 148					
C 149					
C 150					
C 151					
C 152					
C 153					
C 154					
C 155	EVAPORATOR CPT - WATER VALVE	BURKERT	3		563204
C 156					
C 157	FR SERV. CPT – WATER PUMP DR'S	PED WP	3	561781	561782
C 158	ENGINE CPT – DDEC INTERFACE CONNECTOR	DEUTSCH	31	562572	562536
C 159	ENGINE CPT – DDE FEED	PED WP	6	561606	561607
C 160	FR SERVICE CPT - INTERFACE	AMP CPC	37	561644	561646
C 161	ENGINE DDEC - ECM	PED MP	30		561600
C 162	ENGINE DDEC - ACCESSORIES	PED WP	4	561610	561611
C 163	ENGINE CPT - COOLANT PROBE	PED MP	2		562350
C 164					
C 165					
C 166					
C 167	FR SERVICE CPT - EL. FOOT PEDAL	PED WP	3	561781	561782
C 168	FR SERVICE CPT - DDR	DEUTSCH	6	562360	
C 169	FR SERVICE CPT - WORLD TR. INTERFACE	AMP CPC	16	561639	561640
C 169	FR SERV. COMPT. – SPEED SWITCH	AMP	15	562011	562012
C 170	FR JCT BOX FLASHER UNIT	PED	2		561940
C 171	LH CONSOLE	AMP CPC	24	561642	561643
C 172	FR SERVICE COMPT – KNEELING PANEL	AMP CPC	16	561639	561640
C 172	ENGINE COMPT. – WATER TANK HEATER	PED WP	2	561566	561690
C 173					
C 174					
C 175					
C 176	UNDER DASH RH – WIPER PULSE	AMP FF	6		561186
C 177	UNDER DASH RH – WIPER MOTOR	AMP FF	6		561186
C 178					
C 179					
C 180	KNEELING PANEL – DIODE SOCKET	AMP MNL	15	561987	561986
C 181					

NO	LOCATION	TYPE	CAVITY	#PIN HOUSING	#SOCKET HOUSING
C 182					
C 183					
C 184	FR SERV. COMPT. – KNEELING PROX. SW.	ITT SS	3	561080	561111
C 185	KNEELING PANEL – DOWN SOL. VALVE	PNEUMAC	3		641385
C 186					
C 187	FR SERVICE JCT BOX - RESISTORS	AMP MNL	6	561552	561515
C 187	KNEELING PANEL– PARK BRAKE INTERLOCK	PNEUMAC	3		641385
C 188					
C 189	ENGINE COMPT – DOOR LIGHT BACK UP	TRUCK-LITE	2	562755	
C 190	ENGINE COMPT – DOOR LIGHT STOP/TURN	AMP SS	3		562601
C 191	ENGINE COMPT – DOOR LIGHT STOP/TURN	AMP SS	3		562601
C 192	ENGINE COMPT – DOOR LIGHT PARKING	AMP SS	3		562601
C 193					
C 194					
C 195					
C 196	KNEELING PANEL – UP SOL. VALVE	PNEUMAC	3		641385
C 197	KNEELING PANEL – CTR SOL. VALVE	PNEUMAC	3		641385
C 198					
C 199					
C 200	PARCEL RACK – FLUORESCENT LTS	AMP MNL	2	561248	561247
C 201	PARCEL RACK – FLUORESCENT LTS	AMP MNL	2	561248	561247
C 202	RH PARCEL RACK – INDIRECT LTS	MOLEX	2		562758
C 203	PARCEL RACK – FLUORESCENT LTS	MOLEX	6		562759
C 204	RH PARCEL RACK – RACK LTS	AMP MNL	2	560900	560858
C 205	RH PARCEL RACK – FEEDING	AMP MNL	9	561661	561662
C 206	RH PARCEL RACK – FEEDING	AMP FF	4	562760	562756
C 207	LH PARCEL RACK – FEEDING	AMP FF	4	562760	562756
C 208	PARCEL RACK – FLUORESCENT LTS	MOLEX	2		562758
C 209	LH PARCEL RACK – HOTESS CHIME	AMP MNL	3	561667	561550
C 210	LH PARCEL RACK – FEEDING	AMP MNL	9	561661	561662
C 211	FR ROOF – SUN VISOR LH	AMP MNL	2	560900	560898
C 212	FR ROOF – SUN VISOR RH	AMP MNL	2	560900	560898
C 213	WCL DOOR UP HING–DOOR READ & HOST. SW	AMP MNL	6	561552	561515
C 214					
C 215					
C 216					
C 217	RH PANEL SW. – SCENIC VIEW CAMERA	EATON	12		562763
C 218	RH PANEL SW. – LIGHTS SPARE	AMP MNL	2	560900	560898
C 219					
C 220					
C 221					
C 222					
C 223	HEAD LIGHTS - FLASHER	DEUTSCH	5	562565	562566
C 224	HEAD LIGHTS	PED MP	3		562099
C 225	FOG LIGHTS	DEUTSCH	3	562902	562901
C 226	FRONT HEADLIGHTS – MARKER & FLASHER	PED	3	562137	
C 226	BATT. COMPT. – INTERIOR LTS	AMP MNL	2	561248	561247
C 227					
C 228					
C 229	BATT. COMPT. – CHARGER 110V.	PED WP	1	561577	561605
C 230	ENGINE COMPT. – FUEL PRIME PUMP SW.	PED WP	2	561566	561690
C 231	ENGINE COMPT. – FUEL PRIME PUMP	PED WP	2	561566	561690
C 232					
C 233	FIRST LUGGAGE CPT.	VDO	8		562043
C 234	FIRST LUGGAGE CPT.	VDO	8		562044
C 235	FIRST LUGGAGE CPT.	VDO	8		562041
C 236	FIRST LUGGAGE CPT.	AMP MNL	4	560851	560858
C 236	FR SERVICE CPT CENTER - ABS	AMP CPC	14	561636	561637
C 237	FR AXLE CPT - ABS RH SENSOR	WABCO	2	641132	
C 238	FR AXLE CPT - ABS RH VALVE	WABCO	3	641098	
C 239	FR AXLE CPT - ABS LH VALVE	WABCO	3	641098	
C 240	FR AXLE CPT - ABS LH SENSOR	WABCO	2	641132	
C 241	LAST LUGGAGE COMPT - ABS	PED WP	6	561606	561607
C 242	DRIVE AXLE CPT - ABS LH SENSOR	WABCO	2	641132	
C 243	DRIVE AXLE CPT - ABS LH VALVE	WABCO	3	641098	

CONNECTORS CODE

NO	LOCATION	TYPE	CAVITY	#PIN HOUSING	#SOCKET HOUSING
C 244	DRIVE AXLE CPT - ABS RH VALVE	WABCO	3	641098	
C 245	DRIVE AXLE CPT - ABS RH SENSOR	WABCO	2	641132	
C 246	DRIVE AXLE CPT – ATC SOL.	PED WP	2	561566	561690
C 247	E.C.U. EATON TRANS.	PED MP	18		562573
C 248	LAST LUGGAGE CPT - ABS	PED WP	6	561606	561607
C 249	FR SERVICE CPT - ABS/DDEC	PED WP	2	561566	561690
C 250	LH CONSOLE – LOW BOUY	PED WP	2	561566	561690
C 251	LH SW PANEL – FAST IDLE	EATON	12		562763
C 252	LUGGAGE COMPT. – WINDOW AJAR	MOLEX	4	561477	561476
C 253	LH SWITCH PANEL - ETHER	EATON	12		562763
C 254					
C 255	LH SWITCH PANEL – ENGINE BRAKE	EATON	12		562763
C 256					
C 257					
C 258	LH SWITCH PANEL – MULTI FUNC. SW	AMP FF	8	561188	
C 259					
C 259	LH SWITCH PANEL – MULTI FUNC. SW	AMP FF	6		561186
C 260					
C 261					
C 262					
C 263	LUGGAGE COMPT. LTS COMPT #3	AMP MNL	2	561248	561247
C 264	LUGGAGE COMPT. LTS COMPT #2	AMP MNL	2	561248	561247
C 265	LUGGAGE COMPT. LTS COMPT #1	AMP MNL	2	561248	561247
C 266	ENTRACE DOOR KEYLESS	AMP CPC	14	561585	561583
C 267	UNDER DASH RH – ENT. DOOR PANEL	AMP CPC	24	561642	561643
C 268	FR MIRROR RH	CONXALL	5	563091	563090
C 269	FR MIRROR LH	CONXALL	5	563091	563090
C 270	LUGGAGE COMPT LTS - 3 LH	AMP MNL	2	561248	561247
C 271	LUGGAGE COMPT LTS - 4	AMP MNL	2	561248	561247
C 272					
C 273	ENT. DOOR PANEL – DIODE SOCKET	AMP MNL	9	561670	561669
C 274					
C 275	ENT. DOOR PANEL – DIODE SOCKET	AMP MNL	9	561670	561669
C 276					
C 277	RH UNDER DASH – ENT. DOOR REED SW.	AMP MNL	2	560900	560858
C 278	RH PASS. AIR DUCT – ENT DOOR PRESS SW.	PED WP	2	561566	561690
C 279	RH UNDER DASH – ENT. DOOR REED SW.	AMP MNL	2	560900	560858
C 279	FR SERVICE COMPT LH – STEERING ZF	DEUTSCH	2		562485
C 280	ENGINE COMPT – A/C COMPRESSOR AUX.	PED WP	2	561566	561690
C 281					
C 282	FR SERVICE COMPT – STEERING ZF	VOLVO	2		562928
C 283	LH CONSOLE – SPARE SW. LTS	AMP MNL	2	561248	561247
C 284					
C 285					
C 286					
C 287					
C 288					
C 289					
C 290	LUGGAGE CPT - DOOR LOCK	AMP MNL	4	560851	560852
C 291	LUGGAGE CPT - DOOR LOCK	AMP MNL	4	560851	560852
C 292					
C 293					
C 294					
C 295					
C 296					
C 297					
C 298					
C 299	RH SWITCH PANEL - GALLEY	EATON	12		562763
C 300					
C 301					
C 302					
C 303	RR JCT BOX - DIODES	AMP MNL	15	561987	561986
C 304	RR JCT BOX - DIODES	AMP MNL	15	561987	561986
C 305					
C 306					

NO	LOCATION	TYPE	CAVITY	#PIN HOUSING	#SOCKET HOUSING
C 307					
C 308					
C 309	ENGINE DDEC - ECM POWER	PED	4	561610	561611
C 310	LH CONSOLE SW – LUG. DOOR LOCK	EATON	12		562763
C 311	RH SWITCH PANEL – HOTESS CHIME	EATON	12		562763
C 312	ENGINE DDEC - ACCESSORIES	PED WP	3	561781	561782
C 312	RH SWITCH PANEL – READING LAMP	EATON	12		562763
C 313	ENGINE DDEC – INTERFACE	FCI	10	563207	
C 313	RH SWITCH PANEL – INTERIOR LTS	EATON	12		562763
C 314	KNEELING PANEL – PRESS SW.	PED WP	2	561566	561690
C 314	RH SWITCH PANEL – INTERIOR LTS	EATON	12		562763
C 315	LH SWITCH PANEL – LH SUN VISOR SW.	EATON	12		562763
C 316	INTO HORN BOX – KNEELING BUZZER	DEUTSCH	2	562486	562485
C 317	LH SWITCH PANEL – RH SUN VISOR SW.	EATON	12		562763
C 318	LH CONSOLE SW – DR'S WINDOW SW.	EATON	12		562763
C 319	ENGINE DDEC - ECM POWER	PED	4	561610	561611
C 320	RT SWITCH PANEL – DRIVER'S LTS SW.	EATON	12		562763
C 321	UNDER DASH RH - KEYLESS MODULE	AMP COM	26		562676
C 322	UNDER DASH RH - KEYLESS MODULE	AMP COM	22		562675
C 323	DRIVER'S WINDOW MOTOR	PED	2		561848
C 324	LH SWITCH PANEL – UPPER FAN DEFROST	EATON	12		562763
C 325	LH SWITCH PANEL – KNEELING	EATON	12		562763
C 326					
C 327					
C 328	RR ROOF – GALLEY LAMP		2		
C 329					
C 330					
C 331					
C 332					
C 333					
C 334					
C 335					
C 336					
C 337					
C 338					
C 339	KNEELING PANEL – HI BUOY SOL. VALVE	PNEUMAC	3		641385
C 340	FR JCT BOX – FIRE PIEZO ALARM	AMP MNL	2	560900	560898
C 341	LH SWITCH PANEL – HEAT MIRROR SW.	EATON	12		562763
C 342					
C 343	LH SWITCH PANEL – HEAD LAMP SW.	EATON	12		562763
C 344	LH SWITCH PANEL – HAZARD LT SW.	EATON	12		562763
C 345	LH SWITCH PANEL – FOG LT SW.	EATON	12		562763
C 346					
C 347					
C 348	INSTR. PANEL CENT. – RACOR MODULE	MOLEX	6	562070	562069
C 349					
C 350					
C 351					
C 352					
C 353					
C 354					
C 355					
C 356					
C 357					
C 358					
C 359	RH SWITCH PANEL – ENT. DOOR WIND. SW.	EATON	12		562763
C 360	ENTRACE WINDOW MOTOR	PED	2		561848
C 361					
C 362					
C 363					
C 364	FRONT ROOF - ELECTRICAL DEST. SIGN	AMP MNL	3	561667	561550
C 365					
C 366					
C 367					
C 368	FRONT ROOF – ELECTRICAL DEST. SIGN	AMP MNL	3	561667	561550

CONNECTORS CODE

NO	LOCATION	TYPE	CAVITY	#PIN HOUSING	#SOCKET HOUSING
C 369	FRONT ROOF – ELECTRICAL DEST. SIGN	TORRIX	5	562110	
C 370	FRONT ROOF – ELECTRICAL DEST. SIGN	AMP MNL	2	560900	560858
C 371	FRONT ROOF – ELECTRICAL DEST. SIGN	AMP MNL	3	561667	561550
C 372	FRONT ROOF – ELECTRICAL DEST. SIGN	MOLEX	4	561477	561476
C 373					
C 374					
C 375					
C 376					
C 377	LH SWITCH PANEL – STOP ENGINE OVERIDE	EATON	12		562763
C 378					
C 379	LUGGAGE COMPT. – WINDOW AJAR SW.	MOLEX	4	561477	561476
C 380					
C 381	UNDER DASH PANEL – ANTI THILED	AMP MNL	2	561248	561247
C 382	ENGINE GENERATOR (1)	PED WP	1	561605	561577
C 383	ENGINE COMPT – VOLTAGE REGULATOR	PED WP	1	561605	561577
C 384					
C 385	BATT. COMPT. – BJB INTERFACE	AMP MNL	12	561735	561736
C 386	LH SWITCH PANEL – W.C.LIFT	EATON	12		562763
C 387	EVAPORATOR COMPT. - BY–PASS VALVE	PED WP	2	561566	561690
C 387	BATTERY COMPT. – WCL ACCES.	AMP CPC	16	561639	561640
C 388	LUGG. COMPT.(4) – WCL DOOR ACCESS.	AMP MNL	12	561735	561736
C 389	EVAPORATOR COMPT. – WATER PUMP	PED WP	2	561566	561690
C 390	EVAPORATOR COMPT. – A/C JCT. BOX	DEUTSCH	24	562280	562283
C 391	CONDENSER COMPT. A/C PRESS SW 2 SP	PED WP	2	561566	561690
C 392					
C 393					
C 394	UNDER DASH - B/U MONITOR	AMP MNL	4	560851	560852
C 395	UNDER DASH - B/U MONITOR	CLARION	4		990335
C 396	PARCEL RACK – SPEAKER FEEDING	MOLEX	4	562507	562503
C 397					
C 398					
C 399	ENGINE GENERATOR (2)	PED WP	2	561566	561690
C 400	ENGINE COMPT. – BLOCK HEATER	PED WP	3	561781	561782
C 401					
C 402					
C 403	GALLEY – REFRIGERATOR		2		
C 404	GALLEY – LAMP SWITCH		2		
C 405	INVERTER SIGNAL	AMP MNL	2	561248	561247
C 406					
C 407					
C 408					
C 409					
C 410					
C 411					
C 412					
C 413					
C 414					
C 415					
C 416					
C 417					
C 418					
C 419	FR JCT BOX – RET/JAKE SELECTION	AMP MNL	3	561667	561550
C 420					
C 421	ENGINE COMPT. - WEBASTO	AMP FF	2	562473	562474
C 422	ENGINE COMPT. - WEBASTO	PED	2	562644	561597
C 423					
C 424	UNDER DASH – AUDIBLE FLASHER	AMP MNL	3	561667	561550
C 425					
C 426	ENGINE S60 RAD. FAN CLUTCH	PED WP	3	561781	561782
C 427					
C 428	RH SW PANEL – DASH LTS RHEOSTAT	AMP MNL	3	561667	561550
C 429					
C 430	LH CONSOLE – PRE-HEAT TIMER	AMP FF	8	561188	562363
C 431	LH CONSOLE – PRE-HEAT TIMER		1		560488
C 432					

NO	LOCATION	TYPE	CAVITY	#PIN HOUSING	#SOCKET HOUSING
C 433					
C 434					
C 435					
C 436					
C 437					
C 438					
C 439					
C 440					
C 441					
C 442					
C 443					
C 444					
C 445					
C 446					
C 447					
C 448					
C 449					
C 450	S.S. PANEL - FEEDING	MOLEX	4	562507	562503
C 451	S.S. PANEL - FEEDING	MOLEX	2	562550	562549
C 452	UNDER DASH – S.S. ACC. SIGNAL	MOLEX	2	562550	562549
C 453	S. S. PANEL – VCR FEEDING	PED WP	2	561566	561690
C 454	S. S. PANEL – VCR FEEDING	PED WP	2	561566	561690
C 455	PARCEL RACK – WIRELESS MICROPHONE	MOLEX	6		562464
C 456	WORLD TRANS. - RETARDER ACCUM.	PED MP	2		562427
C 457	WORLD TRANS. - MAIN CONNECTOR	DEUTSCH	31	562572	562536
C 458	WORLD TRANS. - TURBINE SP. SENS.	PED MP	2		562426
C 459	WORLD TRANS. - ENGINE SP. SENS.	PED MP	2		562426
C 460	WORLD TRANS. - SPEED SENSOR	ITT	2		562541
C 461	WORLD TRANS. - RETARDER TEMP.	PED MP	2		562856
C 462	WORLD TRANS. - RETARDER SOL. "K"	PED MP	2		562426
C 463	WORLD TRANS. - SENSOR CONN.	DEUTSCH	16	562570	562571
C 464	RR JCT BOX - DDL CONN	DEUTSCH	6		565360
C 465	LH CONSOLE - SHIFTER SELECTOR	PED	20		562825
C 466	FR SERVICE CPT - RESIS. MOD.	PED WP	3		562428
C 467	FR SERVICE CPT - RESIS. MOD.	PED WP	3		562428
C 468	STEERING COLUMN – RET. HAND LEVER	AMP FF	8	561188	562363
C 469	FR SERVICE COMPT. – RESIS. MOD.	AMP FF	8	561188	562363
C 470					
C 471					
C 472	FR SERVICE CPT – SILENT 1000 OR EATON	PED WP	2	561566	561690
C 473					
C 474	DRIVER'S TEMP SENSOR	AMP MNL	2	561248	561247
C 475	FR SERVICE CPT - SPEED SIGN. CONNECT.	DEUTSCH	6	562583	562581
C 475M	FR SERVICE CPT – SPEED SIGN. W. TR.	DEUTSCH	6	562583	562581
C 475W	FR SERVICE CPT – SPEED SIGN. W. TR.	DEUTSCH	6	562583	562581
C 476					
C 477					
C 478	FRONT ROOF – ELECTRONIC DEST. SIGN	AMP CPC	9	561636	561637
C 479	UNDER DASH – HVAC DASH MODULE	MOLEX	3		562783
C 480	UNDER DASH RH – DR'S FAN SPEED CTR	PED WP	4	561889	561890
C 481	UNDER DASH RH – DR'S FAN SPEED CTR	PED WP	3	561781	561782
C 482					
C 483	FR SERVICE CPT – ELECTRICAL SEAT	PED	2	562237	
C 484	UNDER DASH LH – FOOT DAMPER MOTOR	PED	2		562076
C 485	UNDER DASH LH – DASH & DEFR. DAMP. M.	AMP MNL	3	561667	561558
C 486	WCL ROOF DOOR – DOOR LT.	LEECRAFT	2	------	562803
C 487	S.S PANEL – AUDIO IN AMPLI	MOLEX	4	------	563071
C 488	S.S PANEL – AMPLI SIGNAL	MOLEX	8	------	562465
C 489	S.S PANEL – SPEAKER OUTLET	MOLEX	6	------	562464
C 490					
C 491					
C 492					
C 493					
C 494					
C 495					

CONNECTORS CODE

NO	LOCATION	TYPE	CAVITY	#PIN HOUSING	#SOCKET HOUSING
C 496					
C 497					
C 498					
C 499					
C 500	FR JCT PANEL - PRODRIVER	MOLEX	6	562070	562069
C 501					
C 502	LH DASH PANEL – PRE- HEAT SW.	EATON	12		562763
C 503	LH CONSOLE-PR0HEAT TIMER	PED MP	6	------	562878
C 504	LH CONSOLE -WEBASTO TIMER	AMP	8	------	562852
C 505	LH CONSOLE -ESPAR TIMER	AMP	12	------	562681
C 506	FR JCT BOX – DIGITAL CLOCK	AMP CPC	4	561685	561687
C 507	LH HAT RACK – DIGITAL CLOCK	MOLEX	4	561477	561476
C 508	RR JCT BOX - FAN CLUTCH RETARDER	AMP MNL	6	561552	561515
C 509	EVAP. COMPT. – NOT USED	DEUTSCH	5		562566
C 515	FR JCT BOX CPT. - INTERCOM	MOLEX	4	561477	561476
C 516	FR JCT BOX CPT. - INTERCOM	MOLEX	6	562070	562069
C 517	LAVATORY WALL - INTERCOM	MOLEX	6	562070	562069
C 519A	RH UNDER DASH – ENTRANCE DOOR SOL.	PNEUMAC	3		641385
C 519B	RH UNDER DASH – ENTRANCE DOOR SOL.	PNEUMAC	3		641385
C 520	RH UNDER DASH – ENTRANCE DOOR SOL.	PNEUMAC	3		641385
C 521	RH UNDER DASH – ENTRANCE DOOR SOL.	PNEUMAC	3		641385
C 522	FR JCT BOX – DAYTIME LTS MODULE	BOSCH	5		561183
C 523	FR JCT BOX – FUSE BLOCK	PED	8	562647	562646
C 524	FR JCT BOX – FUSE BLOCK	PED	8	562647	562646
C 525	FR JCT BOX – FUSE BLOCK	PED	8	562647	562646
C 526	FR JCT BOX – FUSE BLOCK	PED	8	562647	562646
C 527	FR JCT BOX – FUSE BLOCK	PED	8	562647	562646
C 528					
C 529					
C 530	RR JCT BOX – FUSE BLOCK	PED	8	562647	562646
C 531	RR JCT BOX – FUSE BLOCK	PED	8	562647	562646
C 532	LH PARCEL RACK – A/C LIQ. SOL.	AMP MNL	2	561248	561247
C 533	RH PARCEL RACK – A/C LIQ. SOL.	AMP MNL	2	561248	561247
C 534					
C 535					
C 536					
C 537	A/C JCT BOX RESISTOR SIGN. RLY	AMP MNL	2	561248	561247
C 538	FR SERV. CPT RH – OUTSIDE TEMP. SENS	AMP MNL	2	561248	561247
C 539	HVAC DASH MODULE OUTPUT CONN.	MOLEX	24		562780
C 540	HVAC DASH MODULE INPUT CONN.	MOLEX	22		562781
C 541					
C 542					
C 543					
C 544	S.S. PANEL – AUDIO SEAT	PED WP	3	561781	561782
C 545					
C 546	FR. JCT BOX – CHARGER WIRELESS MIC.	MOLEX	2		563025
C 547					
C 548	LH DASH PANEL – T.T.LT TEST SW.	EATON	12		562763
C 549	LH DASH PANEL – ENGINE FAN OVERRIDE	EATON	12		562763
C 550	LAST LUGG. CPT. -WCL MODULE	AMP CPC	16	561694	561695
C 551	LAST LUGG. CPT. -WCL REMOTE	AMP CPC	9	561636	561637
C 552					
C 553	UNDER DASH – S.S. CONTROL HEAD	MOLEX	16		562559
C 554	UNDER DASH – S.S. CONTROL HEAD	MOLEX	16		562559
C 555	UNDER DASH – S.S. CONTROL HEAD	MOLEX	16		562559
C 556	UNDER DASH – RADIO FEEDING	MOLEX	2	562550	562549
C 557	UNDER DASH – RADIO FEEDING	MOLEX	9	562556	562555
C 558	FR. SERV. COMPT. – MIC. OUTLET	MOLEX	4	562507	562503
C 559					
C 560					
C 561	LH PARCEL RACK – WIRELESS MIC.	MOLEX	8		562465
C 562	LH PARCEL RACK – VCR SIGNAL	MOLEX	12		563070
C 563	FR. SERV. COMPT. – DRIVER SPEAKER	MOLEX	4	562507	562503
C 564	FR. SERV. COMPT. – MIC. OUTLET	MOLEX	4	562507	562503
C 565	FR. SERV. COMPT. – MIC. OUTLET	MOLEX	4	562507	562503

NO	LOCATION	TYPE	CAVITY	#PIN HOUSING	#SOCKET HOUSING
C 566	FR. SERV. COMPT. – MIC. OUTLET	MOLEX	4	562507	562503
C 567	FR. SERV. COMPT. – MIC. OUTLET	MOLEX	4	562507	562503
C 568	S.S. PANEL – SPEAKER OUTLET	CINTCH	4	562553	
C 569	S. S. PANEL – AMPLI SIGNAL	MOLEX	9	562556	562555
C 570	UNDER DASH PANEL – T.T.LT MODULE	MOLEX	6		562464
C 571	UNDER DASH PANEL – T.T.LT MODULE	MOLEX	20		562778
C 572	UNDER DASH PANEL – T.T.LT MODULE	MOLEX	18		562779
C 573	UNDER DASH PANEL – T.T.LT MODULE	MOLEX	8		562465
C 574	PARCEL RACK – INDIRECT LTS BALLAST	MOLEX			562759
C 575	RH PARCEL RACK - FFEDING	MOLEX	4	562507	562503
C 576	RH PARCEL RACK - FFEDING	AMP MNL	3	561667	561550
C 577	LH PARCEL RACK - FFEDING	AMP MNL	3	561667	561550
C 578	LH PARCEL RACK - FFEDING	MOLEX	4	562507	562503
C 579	LHPARCEL RACK-VCR POWER	MOLEX	4		563071
C 580	LH DASH PANEL – PARCEL RACK A/C SW.	EATON	12		562763
C 581	LH DASH PANEL – ELECTRICAL HORN	PED MP	2		562777
C 582					
C 583	LH DASH PANEL – MASTER KEY SW.	DEUTSCH	2	562486	562485
C 584	FR. SERVICE COMPT – HORN PNEU. VALVE	PNEUMAC	3		562848
C 585					
C 586	FR SERVICE COMPT – ACC. PNEU.VALVE	PNEUMAC	3		562848
C 587	LH PARCEL RACK DVD UNIT	MOLEX	4	563040	563071
C 588	FR SERV. COMPT. – S.S. INTERFACE	AMP CPC	37	561645	561646
C 589	FR. MIRROR LH	CONXALL	8	563163	563088
C 590	FR. MIRROR RH	CONXALL	8	563163	563088
C 591	LH CONSOLE – LH MIRROR SW.	EURAMT.	8		562749
C 592	LH CONSOLE – RH MIRROR SW.	EURAMT.	8		562749
C 594	FRONT ROOF – DRIVER'S LTS	LEEKRAFT	2	------	562803
C 595	RH DASH PANEL – ENTRANCE DOOR SW.	MOLEX	4	562507	562503
C 596	RH DASH PANEL – ENTRANCE DOOR SW.	MOLEX	4	562507	562503
C 597	LH DASH PANEL – DISPLAY SET SW.	AMP	5		562905
C 598	LH DASH PANEL – DISPLAY SET SW.	AMP	5		562905
C 599	UND. DASH – MAGN. SW CTR POS. DR'S AIR	AMP MNL	2	561248	561247
C 604	LH PARCEL RACK DVD VIDEO STABILIZER	SWITCHCRAFT	1	563074	
C 605	LH PARCEL RACK – A/C UNIT	AMP MNL	6	561552	561515
C 606	RH PARCEL RACK – A/C UNIT	AMP MNL	6	561552	561515
C 607					
C 608	FR SERV. COMPT – SPEED SIGNAL (SPARE)	PED WP	2	561566	561690
C 609					
C 610					
C 611	RH PARCEL RACK READING LTS WCL	MOLEX	6	562558	562557
C 612	RH PARCEL RACK LUOR. INSTATION LTS WCL	MOLEX	4	562507	562503
C 613	RH PARCEL RACK INDIRECT LTS WCL	AMP MNL	3	561667	561550
C 614	RH PARCEL RACK INDIRECT LTS WCL	AMP MNL	3	561667	561550
C 615	LH PARCEL RACK DVD SIGN ALONG ADAPTOR	MOLEX	2	562550	562549
C 701	ZF TRANSMISSION ECU	KOSTAL	20		
C 702	SHIFT SELECTOR – LH CONSOLE	AMP	14		563338
C 712	NEUTRAL SWITCH ON ZF TRANSM. (TOP)	AMP	4		563340
C 714	OUTPUT SENSOR ON ZF TRANSM. (BOTTOM)	AMP	4		563340
C 717	FR SERV. COMPT – MAIN CONN.	AMP CPC	22	561642	561643
C 720	ENGINE COMPT – BLKHD CONNECTOR	DEUTSCH	31	563359	563358
C 721	LH CONSOLE – ZF TESTMAN DIAG. TOOLS	AMP MNL	6	563356	
C 723	ENGINE COMPT – FOR TRANSM.	DEUTSCH	3		562884
C 736	FR SERV. COMPT – ZMTEC MODULE	PACKARD	30	563053	
C 740	ABOVE DRIVE AXLE – EASY START SOL VALVE	LEONI	2		641949
C 742	REAR JCT BOX - FUSE BLOCK	AMP	8	562446	
C 745	FR SERV COMPT – THROTTLE POS. SENSOR	PED WP	3	561781	
C 760	FR SERVICE COMPT – TO J1939	DEUTSCH	3		
C 761	FR SERVICE COMPT – TO J1939	DEUTSCH	3		562884
C 762	ENGINE COMPT – TO J1939	DEUTSCH	3		562884
C 763	ENGINE COMPT – TO J1939	DEUTSCH	3		562884
C 764	ENGINE COMPT – TO J1939	DEUTSCH	3		562884
C 765	ENGINE COMPT – TO J1939	DEUTSCH	3		562884
C 766	ENGINE COMPT – TO J1939	DEUTSCH	3		562884
CS	FR SERVICE CPT - ECU WOLRD TR.	PED MP	32		562817

CONNECTORS CODE

NO	LOCATION	TYPE	CAVITY	#PIN HOUSING	#SOCKET HOUSING
CT	FR SERVICE CPT - ECU WORLD TR.	PED MP	32		562824
CV	FR SERVICE CPT - ECU WORLD TR.	PED MP	32		562823
CX	CLUSTER	JAE	5		562957
CX 1	FR SERVICE CPT - ECU ABS	AMP JN	15		563200
CX 2	FR SERVICE CPT - ECU ABS	AMP JN	18		563201
CY	CLUSTER	JAE	30		562765
CW X1	ENGINE COMPT. – WATER HEATER	AMP	7	563134	563135
CW X3	ENGINE COMPT. – WATER HEATER	AMP	7	563134	563135
LX	CLUSTER	JAE	22		562766
LY	CLUSTER	JAE	30		562767
RX	CLUSTER	JAE	30		562767
WEB 1	ENGINE COMPT. - WEBASTO	AMP FF	2	562473	562474
WEB 2	ENGINE COMPT. - WEBASTO	AMP FF	2	562643	
ZF 1	FR JCT BOX – STEERING E.C.U.	HELLA	9		562929

NO	LOCATION	TYPE	CAVITY	#PIN HOUSING	#SOCKET HOUSING

CONNECTORS CODE

NO	LOCATION	TYPE	CAVITY	#PIN HOUSING	#SOCKET HOUSING
A 1	UNDER DASH – AUDIO SIGNAL	RCA	1	562090	562330
A 2	UNDER DASH – AUDIO SIGNAL	RCA	1	562090	562330
A 10	UNDER DASH – AUDIO SIGNAL	RCA	1	562090	562330
A 11	UNDER DASH – AUDIO SIGNAL	RCA	1	562090	562330
A 18	S. S. PANEL – AUDIO SIGNAL	RCA	1	562090	562330
A 19	S. S. PANEL – AUDIO SIGNAL	RCA	1	562090	562330
AA 1	UNDER DASH PANEL- SONALERT	BOSCH	5	------	561183
C 1	FR JCT BOX COMPARTIMENT	AMP CPC	14	561585	561584
C 2	FR JCT BOX COMPARTIMENT	AMP CPC	16	561638	561640
C 3	FR JCT BOX COMPARTIMENT	AMP CPC	37	561644	561646
C 4	FR JCT BOX COMPARTIMENT	AMP CPC	24	561641	561643
C 5	FR SERVICE COMPT. - UNDERNEATH	AMP CPC	37	561645	561646
C 6	FR SERVICE COMPT. - UNDERNEATH	AMP CPC	16	561639	561640
C 7	FR SERVICE COMPT - CLUTCH SW	ITT SS	3	561080	561111
C 8	FR SERVICE COMPT. - UNDERNEATH	AMP CPC	24	561642	561643
C 9	FR SERVICE COMPT. - UNDERNEATH	AMP CPC	24	561642	561643
C 10	FR SERVICE DOOR ACCESS.	DEUTSCH	5	562565	562566
C 11	FR SERV. CPT ACCESS	AMP CPC	37	561645	561646
C 12	FR SERV. CPT ACCESS	AMP CPC	16	561639	561640
C 13	FR JCT BOX COMPARTIMENT	AMP MNL	2	561248	561247
C 14	LAST LUGGAGE COMP(4) - DOCKING LTS	AMP MNL	2	561248	561247
C 15	UNDER STAIRS – CORNERING LTS	AMP MNL	2	560900	560898
C 16	LH CONSOLE SW-CRUISE ON/OFF	EATON	12	------	562763
C 17	LH CONSOLE SW-CRUISE RESUME	EATON	12		562763
C 18	LH CONSOLE SW-CRUISE SET	EATON	12		562763
C 19	LH CONSOLE SW-DECEL SW	EATON	12		562763
C 20	RR JCT BOX	DEUTSCH	70	562282	562285
C 21	ENGINE COMPT - LOCK DOOR MOT.	PED WP	2		562076
C 22	LUGGAGE COMPT (A) - A/C & FUEL TANK	AMP CPC	16	561639	561640
C 23	LUGGAGE COMPT (1) – LUGG. ACCESS.	AMP CPC	24	561642	561643
C 24	ENGINE COMPT. – INTERF RJB	PED WP	6	561606	561607
C 25	ENGINE COMPT. – INTERF RJB	PED WP	6	561606	561607
C 26	ENGINE COMPT. ACCESS	DEUTSCH	40	562281	562284
C 27	ENGINE COMPT. – INTERF. RJB	DEUTSCH	6	562583	562581
C 28	LUGGAGE COMPT(4) – LUGG. ACCESS	AMP CPC	24	561642	561643
C 29	FR SERVICE COMPT – E.C.U. FEED	PED WP	3	561781	561782
C 30	ENGINE COMPT – MASTER SW. SIGN.	DEUTSCH	2	562486	562485
C 31	RR JCT BOX – PARCEL RACK FEEDING	DEUTSCH	31	562572	562536
C 32	ENGINE COMPT. – 12VI FOR OPTION	PED WP	1	-----	561577
C 33	FR SERV. COMPT. – VSS SIGNAL	PED WP	2	561566	561690
C 34	FR JCT BOX EATON TRANS. J1939	DEUTSCH	3	562877	562884
C 35	A/C COMPT - AIR RETURN SENSOR	AMP MNL	2	561248	561247
C 36	UNDER STAIRS – STEP LIGHTS	AMP MNL	2	561248	561247
C 36	RH PARCEL RACK – EMERGENCY LTS	AMP MNL	2	560900	560898
C 37	LH PARCEL RACK - FEEDING	MOLEX	6	562558	562557
C 38	RH PARCEL RACK - FEEDING	MOLEX	6	562558	562557
C 39	ENGINE COMPT. ECM J1939	DEUTSCH	3	562877	562884
C 40					
C 41	ENGINE COMPT – RH DOOR LOCK	DEUTSCH	4	562479	562477
C 42	ENGINE COMPT – RR CAP LIGHTING	DEUTSCH	6	562583	562581
C 43	FR JCT BOX – ALT. MODULE	AMP MNL	12	561735	561734
C 44	ENGINE COMPT - LIGHTS	GROTE	2		563268
C 45	FR JCT BOX COMPT – ROOF ACCESS	AMP CPC	24	561642	561643
C 46	ENGINE COMPT. ECM J1939	DEUTSCH	3	562877	562884
C 47	ENGINE DDEC-ECM J1939	PED MP	6	------	561962
C 48	FR SERV. CPT. PRESS SW PARK BRAKE	PED WP	2	561566	561690
C 49	LAVATORY ROOF – NIGHT LIGHT	AMP MNL	2	560900	560898
C 50	LAVATORY ROOF - LIGHT	LEECRAFT	2	-------	562803
C 50	LH SWITCH PANEL – SAFETY SW.	EATON	12	------	562763
C 51	FR SERV.CPT.PARK. BRAKE SOL. VALVE	PNEUMAC	2	------	641385
C 52	ENGINE COMPT - COMPRESSOR	PED WP	2	561566	561690
C 53	ENGINE COMPT - COMPRESSOR	PED WP	2	561566	561690
C 54	FRONT ROOF – UPPER FAN DEFROST	AMP MNL	6	561552	561515
C 55	CENTRAL DOOR LOCK	DEUTSCH	4	562479	562477
C 56	LH PARCEL RACK - FEEDING	MOLEX	6	562558	562557

NO	LOCATION	TYPE	CAVITY	#PIN HOUSING	#SOCKET HOUSING
C 57	RH PARCEL RACK - FEEDING	MOLEX	6	562558	562557
C 58					
C 59					
C 60					
C 61	ENGINE COMPT - FUEL FILTER	PED WP	2	561566	561690
C 62	ENGINE COMPT – COMPR. AUX. PRESS. SW.	PED WP	2	561566	561690
C 63	ENGINE COMPT – COMPR. AUX. PRESS. SW.	PED WP	2	561566	561690
C 64					
C 65	ENGINE CPT – A/C PRESS SW FAN CLUTCH	PED WP	2	561566	561690
C 66	ENGINE CPT – SPARE CONNECTOR	PED WP	1	561605	561577
C 67					
C 68					
C 69					
C 70	LH CONSOLE	AMP CPC	16	561639	561640
C 71	FR JCT BOX COMPT.	AMP CPC	37	561645	561646
C 72	FR JCT BOX COMPT.	AMP CPC	24	561642	561643
C 73					
C 74	FR JCT BOX COMPT.	AMP CPC	37	561645	561646
C 75	SERVICE COMPT. EXT. ENTRANCE DOOR SW.	DEUTSCH	4	562479	562477
C 75	RH PARCEL RACK – READ. LTS FEED. WCL	MOLEX	6	562558	562557
C 76	ENGINE COMPT. FIRE DETECTOR	DEUTSCH	2	562486	562485
C 77	ENGINE COMPT. FIRE DETECTOR	DEUTSCH	2	562486	562485
C 78					
C 79					
C 80					
C 81	LUGGAGE COMPT - DOOR LOCK	AMP MNL	4	560851	560852
C 82	UNDER SEAT – AISLE LTS	AMP MNL	2	560900	560898
C 82	LUGGAGE COMPT - DOOR LOCK	AMP MNL	4	560851	560852
C 83	LUGGAGE COMPT - DOOR LOCK	AMP MNL	4	560851	560852
C 84	LUGGAGE COMPT - DOOR LOCK	AMP MNL	4	560851	560852
C 85					
C 86					
C 87					
C 88	FR SERV. CPT. PRESS SW PARK BRAKE	PED WP	2	561566	561690
C 89					
C 90					
C 91					
C 92	FR JCT BOX COMPT - ABS	AMP CPC	9	561635	561637
C 93					
C 94					
C 95					
C 96	FR SERVICE DOOR ACCESS	AMP MNL	9	561670	561669
C 97	FR SERVICE DOOR – WATER TANK	PED MP	2		562426
C 98					
C 99	FR SERVICE CPT. LTS	AMP MNL	2	561248	561247
C 100					
C 101	FR SERVICE COMPT. ELEC. HORNS	PED WP	2	561566	561690
C 101	CONDENSER COMPT - A/C PRES. SW 1SP	PED WP	2	561566	561690
C 102	CONDENS. COMPT – LIQU. SOL. VAL. PRES.	PED WP	2	561566	561690
C 103	ENGINE COMPT. – LAVATORY FAN	PED WP	2	561566	561690
C 104	ENGINE COMPT. – LAVATORY PUMP	DEUTSCH	4	562479	562477
C 105	UNDER DASH RH - DRV LIO SOL VL	PED WP	2	561566	561690
C 106	UNDER DASH RH - DRV WTR VALVE	PED WP	2	561566	561690
C 107	ENGINE COMPT- LAVATORY PUSH BUTTON	PED WP	2	561566	561690
C 108	FR. SERICE COMPT – GAZ CYLINDER L.H.	DEUTSCH	2	562486	562485
C 109					
C 110					
C 111					
C 112					
C 113					
C 114	ENGINE DDEC - SPEED SIGNAL	PED WP	2	561566	561690
C 115	RR JCT BOX – ENGINE ACCESS	DEUTSCH	40	562281	562284
C 116					
C 117					
C 118	ENGINE COMPT - LICENCE	DOM. AUT	2	930210	

CONNECTORS CODE

NO	LOCATION	TYPE	CAVITY	#PIN HOUSING	#SOCKET HOUSING
C 119	ENGINE COMPT - RH LOWER LAMP	PED WP	6	561606	561607
C 120	ENGINE COMPT - LH LOWER LAMP	PED WP	6	561606	561607
C 121					
C 122					
C 123					
C 124					
C 125					
C 126					
C 127					
C 128					
C 129					
C 130					
C 131					
C 132					
C 133					
C 134	FR JCT BOX – DIODE CONN.	AMP MNL	15	561987	561986
C 135	FR JCT BOX – DIODE CONN.	AMP MNL	15	561987	561986
C 136	FR JCT BOX – DIODE CONN.	AMP MNL	15	561987	561986
C 137	FR JCT BOX – DIODE CONN.	AMP MNL	15	561987	561986
C 138					
C 139					
C 140	HVAC DASH MODULE THERMOMETER	MOLEX	4		562782
C 141	RR DASH PANEL – LTS CONN. (SPARE)	AMP MNL	2	561248	561247
C 142	ENGINE COMPT. B/U ALARM	PED WP	2	561566	561690
C 143					
C 144	FR JCT BOX – AISLE LTS FEEDING	AMP MNL	2	561248	561247
C 145					
C 146					
C 147					
C 148					
C 149					
C 150					
C 151					
C 152					
C 153					
C 154					
C 155	EVAPORATOR CPT - WATER VALVE	BURKERT	3		563204
C 156					
C 157	FR SERV. CPT – WATER PUMP DR'S	PED WP	3	561781	561782
C 158	ENGINE CPT – DDEC INTERFACE CONNECTOR	DEUTSCH	31	562572	562536
C 159	ENGINE CPT – DDE FEED	PED WP	6	561606	561607
C 160	FR SERVICE CPT - INTERFACE	AMP CPC	37	561644	561646
C 161	ENGINE DDEC - ECM	PED MP	30		561600
C 162	ENGINE DDEC - ACCESSORIES	PED WP	4	561610	561611
C 163	ENGINE CPT - COOLANT PROBE	PED MP	2		562350
C 164					
C 165					
C 166					
C 167	FR SERVICE CPT - EL. FOOT PEDAL	PED WP	3	561781	561782
C 168	FR SERVICE CPT - DDR	DEUTSCH	6	562360	
C 169	FR SERVICE CPT - WORLD TR. INTERFACE	AMP CPC	16	561639	561640
C 169	FR SERV. COMPT. – SPEED SWITCH	AMP	15	562011	562012
C 170	FR JCT BOX FLASHER UNIT	PED	2		561940
C 171	LH CONSOLE	AMP CPC	24	561642	561643
C 172	FR SERVICE COMPT – KNEELING PANEL	AMP CPC	16	561639	561640
C 172	ENGINE COMPT. – WATER TANK HEATER	PED WP	2	561566	561690
C 173					
C 174					
C 175					
C 176	UNDER DASH RH – WIPER PULSE	AMP FF	6		561186
C 177	UNDER DASH RH – WIPER MOTOR	AMP FF	6		561186
C 178					
C 179					
C 180	KNEELING PANEL – DIODE SOCKET	AMP MNL	15	561987	561986
C 181					

NO	LOCATION	TYPE	CAVITY	#PIN HOUSING	#SOCKET HOUSING
C 182					
C 183					
C 184	FR SERV. COMPT. – KNEELING PROX. SW.	ITT SS	3	561080	561111
C 185	KNEELING PANEL – DOWN SOL. VALVE	PNEUMAC	3		641385
C 186					
C 187	FR SERVICE JCT BOX - RESISTORS	AMP MNL	6	561552	561515
C 187	KNEELING PANEL– PARK BRAKE INTERLOCK	PNEUMAC	3		641385
C 188					
C 189	ENGINE COMPT – DOOR LIGHT BACK UP	TRUCK-LITE	2	562755	
C 190	ENGINE COMPT – DOOR LIGHT STOP/TURN	AMP SS	3		562601
C 191	ENGINE COMPT – DOOR LIGHT STOP/TURN	AMP SS	3		562601
C 192	ENGINE COMPT – DOOR LIGHT PARKING	AMP SS	3		562601
C 193					
C 194					
C 195					
C 196	KNEELING PANEL – UP SOL. VALVE	PNEUMAC	3		641385
C 197	KNEELING PANEL – CTR SOL. VALVE	PNEUMAC	3		641385
C 198					
C 199					
C 200	PARCEL RACK – FLUORESCENT LTS	AMP MNL	2	561248	561247
C 201	PARCEL RACK – FLUORESCENT LTS	AMP MNL	2	561248	561247
C 202	RH PARCEL RACK – INDIRECT LTS	MOLEX	2		562758
C 203	PARCEL RACK – FLUORESCENT LTS	MOLEX	6		562759
C 204	RH PARCEL RACK – RACK LTS	AMP MNL	2	560900	560858
C 205	RH PARCEL RACK – FEEDING	AMP MNL	9	561661	561662
C 206	RH PARCEL RACK – FEEDING	AMP FF	4	562760	562756
C 207	LH PARCEL RACK – FEEDING	AMP FF	4	562760	562756
C 208	PARCEL RACK – FLUORESCENT LTS	MOLEX	2		562758
C 209	LH PARCEL RACK – HOTESS CHIME	AMP MNL	3	561667	561550
C 210	LH PARCEL RACK – FEEDING	AMP MNL	9	561661	561662
C 211	FR ROOF – SUN VISOR LH	AMP MNL	2	560900	560898
C 212	FR ROOF – SUN VISOR RH	AMP MNL	2	560900	560898
C 213	WCL DOOR UP HING–DOOR READ & HOST. SW	AMP MNL	6	561552	561515
C 214					
C 215					
C 216					
C 217	RH PANEL SW. – SCENIC VIEW CAMERA	EATON	12		562763
C 218	RH PANEL SW. – LIGHTS SPARE	AMP MNL	2	560900	560898
C 219					
C 220					
C 221					
C 222					
C 223	HEAD LIGHTS - FLASHER	DEUTSCH	5	562565	562566
C 224	HEAD LIGHTS	PED MP	3		562099
C 225	FOG LIGHTS	DEUTSCH	3	562902	562901
C 226	FRONT HEADLIGHTS – MARKER & FLASHER	PED	3	562137	
C 226	BATT. COMPT. – INTERIOR LTS	AMP MNL	2	561248	561247
C 227					
C 228					
C 229	BATT. COMPT. – CHARGER 110V.	PED WP	1	561577	561605
C 230	ENGINE COMPT. – FUEL PRIME PUMP SW.	PED WP	2	561566	561690
C 231	ENGINE COMPT. – FUEL PRIME PUMP	PED WP	2	561566	561690
C 232					
C 233	FIRST LUGGAGE CPT.	VDO	8		562043
C 234	FIRST LUGGAGE CPT.	VDO	8		562044
C 235	FIRST LUGGAGE CPT.	VDO	8		562041
C 236	FIRST LUGGAGE CPT.	AMP MNL	4	560851	560858
C 236	FR SERVICE CPT CENTER - ABS	AMP CPC	14	561636	561637
C 237	FR AXLE CPT - ABS RH SENSOR	WABCO	2	641132	
C 238	FR AXLE CPT - ABS RH VALVE	WABCO	3	641098	
C 239	FR AXLE CPT - ABS LH VALVE	WABCO	3	641098	
C 240	FR AXLE CPT - ABS LH SENSOR	WABCO	2	641132	
C 241	LAST LUGGAGE COMPT - ABS	PED WP	6	561606	561607
C 242	DRIVE AXLE CPT - ABS LH SENSOR	WABCO	2	641132	
C 243	DRIVE AXLE CPT - ABS LH VALVE	WABCO	3	641098	

CONNECTORS CODE

NO	LOCATION	TYPE	CAVITY	#PIN HOUSING	#SOCKET HOUSING
C 244	DRIVE AXLE CPT - ABS RH VALVE	WABCO	3	641098	
C 245	DRIVE AXLE CPT - ABS RH SENSOR	WABCO	2	641132	
C 246	DRIVE AXLE CPT – ATC SOL.	PED WP	2	561566	561690
C 247	E.C.U. EATON TRANS.	PED MP	18		562573
C 248	LAST LUGGAGE CPT - ABS	PED WP	6	561606	561607
C 249	FR SERVICE CPT - ABS/DDEC	PED WP	2	561566	561690
C 250	LH CONSOLE – LOW BOUY	PED WP	2	561566	561690
C 251	LH SW PANEL – FAST IDLE	EATON	12		562763
C 252	LUGGAGE COMPT. – WINDOW AJAR	MOLEX	4	561477	561476
C 253	LH SWITCH PANEL - ETHER	EATON	12		562763
C 254					
C 255	LH SWITCH PANEL – ENGINE BRAKE	EATON	12		562763
C 256					
C 257					
C 258	LH SWITCH PANEL – MULTI FUNC. SW	AMP FF	8	561188	
C 259					
C 259	LH SWITCH PANEL – MULTI FUNC. SW	AMP FF	6		561186
C 260					
C 261					
C 262					
C 263	LUGGAGE COMPT. LTS COMPT #3	AMP MNL	2	561248	561247
C 264	LUGGAGE COMPT. LTS COMPT #2	AMP MNL	2	561248	561247
C 265	LUGGAGE COMPT. LTS COMPT #1	AMP MNL	2	561248	561247
C 266	ENTRACE DOOR KEYLESS	AMP CPC	14	561585	561583
C 267	UNDER DASH RH – ENT. DOOR PANEL	AMP CPC	24	561642	561643
C 268	FR MIRROR RH	CONXALL	5	563091	563090
C 269	FR MIRROR LH	CONXALL	5	563091	563090
C 270	LUGGAGE COMPT LTS - 3 LH	AMP MNL	2	561248	561247
C 271	LUGGAGE COMPT LTS - 4	AMP MNL	2	561248	561247
C 272					
C 273	ENT. DOOR PANEL – DIODE SOCKET	AMP MNL	9	561670	561669
C 274					
C 275	ENT. DOOR PANEL – DIODE SOCKET	AMP MNL	9	561670	561669
C 276					
C 277	RH UNDER DASH – ENT. DOOR REED SW.	AMP MNL	2	560900	560858
C 278	RH PASS. AIR DUCT – ENT DOOR PRESS SW.	PED WP	2	561566	561690
C 279	RH UNDER DASH – ENT. DOOR REED SW.	AMP MNL	2	560900	560858
C 279	FR SERVICE COMPT LH – STEERING ZF	DEUTSCH	2		562485
C 280	ENGINE COMPT – A/C COMPRESSOR AUX.	PED WP	2	561566	561690
C 281					
C 282	FR SERVICE COMPT – STEERING ZF	VOLVO	2		562928
C 283	LH CONSOLE – SPARE SW. LTS	AMP MNL	2	561248	561247
C 284	LH DR'S ROOF - MONITOR FEED	PED WP	3	561781	561782
C 285	LH DR'S ROOF – SOUND SYSTEM	AMP CPC	24	561642	561643
C 286					
C 287					
C 288					
C 289					
C 290	LUGGAGE CPT - DOOR LOCK	AMP MNL	4	560851	560852
C 291	LUGGAGE CPT - DOOR LOCK	AMP MNL	4	560851	560852
C 292	LH PARCEL RACK VIDEO PANEL– MONITOR	MOLEX	4	563040	563071
C 293	LH PARCEL RACK VIDEO PANEL – RCA RELAY	AMP MNL	2	561248	561247
C 294	LH PARCEL RACK VIDEO PANEL – RCA RELAY	AMP MNL	2	561248	561247
C 295	LH PARCEL RACK VID. PANEL– AMPLI VIDEO	MOLEX	4	563040	563071
C 296	LH PARCEL RACK VIDEO PANEL – MICRO SIGNAL	MOLEX	4	562507	562503
C 297					
C 298					
C 299	RH SWITCH PANEL - GALLEY	EATON	12		562763
C 300					
C 301					
C 302					
C 303	RR JCT BOX - DIODES	AMP MNL	15	561987	561986
C 304	RR JCT BOX - DIODES	AMP MNL	15	561987	561986
C 305					

NO	LOCATION	TYPE	CAVITY	#PIN HOUSING	#SOCKET HOUSING
C 306					
C 307					
C 308					
C 309	ENGINE DDEC - ECM POWER	PED	4	561610	561611
C 310	LH CONSOLE SW – LUG. DOOR LOCK	EATON	12		562763
C 311	RH SWITCH PANEL – HOTESS CHIME	EATON	12		562763
C 312	ENGINE DDEC - ACCESSORIES	PED WP	3	561781	561782
C 312	RH SWITCH PANEL – READING LAMP	EATON	12		562763
C 313	ENGINE DDEC – INTERFACE	FCI	10	563207	
C 313	RH SWITCH PANEL – INTERIOR LTS	EATON	12		562763
C 314	KNEELING PANEL – PRESS SW.	PED WP	2	561566	561690
C 314	RH SWITCH PANEL – INTERIOR LTS	EATON	12		562763
C 315	LH SWITCH PANEL – LH SUN VISOR SW.	EATON	12		562763
C 316	INTO HORN BOX – KNEELING BUZZER	DEUTSCH	2	562486	562485
C 317	LH SWITCH PANEL – RH SUN VISOR SW.	EATON	12		562763
C 318	LH CONSOLE SW – DR'S WINDOW SW.	EATON	12		562763
C 319	ENGINE DDEC - ECM POWER	PED	4	561610	561611
C 320	RT SWITCH PANEL – DRIVER'S LTS SW.	EATON	12		562763
C 321	UNDER DASH RH - KEYLESS MODULE	AMP COM	26		562676
C 322	UNDER DASH RH - KEYLESS MODULE	AMP COM	22		562675
C 323	DRIVER'S WINDOW MOTOR	PED	2		561848
C 324	LH SWITCH PANEL – UPPER FAN DEFROST	EATON	12		562763
C 325	LH SWITCH PANEL – KNEELING	EATON	12		562763
C 326					
C 327					
C 328	RR ROOF – GALLEY LAMP		2		
C 329					
C 330					
C 331					
C 332					
C 333					
C 334					
C 335					
C 336					
C 337					
C 338					
C 339	KNEELING PANEL – HI BUOY SOL. VALVE	PNEUMAC	3		641385
C 340	FR JCT BOX – FIRE PIEZO ALARM	AMP MNL	2	560900	560898
C 341	LH SWITCH PANEL – HEAT MIRROR SW.	EATON	12		562763
C 342					
C 343	LH SWITCH PANEL – HEAD LAMP SW.	EATON	12		562763
C 344	LH SWITCH PANEL – HAZARD LT SW.	EATON	12		562763
C 345	LH SWITCH PANEL – FOG LT SW.	EATON	12		562763
C 346					
C 347					
C 348	INSTR. PANEL CENT. – RACOR MODULE	MOLEX	6	562070	562069
C 349					
C 350					
C 351					
C 352					
C 353					
C 354					
C 355					
C 356					
C 357					
C 358					
C 359	RH SWITCH PANEL – ENT. DOOR WIND. SW.	EATON	12		562763
C 360	ENTRACE WINDOW MOTOR	PED	2		561848
C 361					
C 362					
C 363					
C 364	FRONT ROOF - ELECTRICAL DEST. SIGN	AMP MNL	3	561667	561550
C 365					
C 366					
C 367					

CONNECTORS CODE

NO	LOCATION	TYPE	CAVITY	#PIN HOUSING	#SOCKET HOUSING
C 368	FRONT ROOF – ELECTRICAL DEST. SIGN	AMP MNL	3	561667	561550
C 369	FRONT ROOF – ELECTRICAL DEST. SIGN	TORRIX	5	562110	
C 370	FRONT ROOF – ELECTRICAL DEST. SIGN	AMP MNL	2	560900	560858
C 371	FRONT ROOF – ELECTRICAL DEST. SIGN	AMP MNL	3	561667	561550
C 372	FRONT ROOF – ELECTRICAL DEST. SIGN	MOLEX	4	561477	561476
C 373					
C 374					
C 375					
C 376					
C 377	LH SWITCH PANEL – STOP ENGINE OVERIDE	EATON	12		562763
C 378					
C 379	LUGGAGE COMPT. – WINDOW AJAR SW.	MOLEX	4	561477	561476
C 380					
C 381	UNDER DASH PANEL – ANTI THILED	AMP MNL	2	561248	561247
C 382	ENGINE GENERATOR (1)	PED WP	1	561605	561577
C 383	ENGINE COMPT – VOLTAGE REGULATOR	PED WP	1	561605	561577
C 384					
C 385	BATT. COMPT. – BJB INTERFACE	AMP MNL	12	561735	561736
C 386	LH SWITCH PANEL – W.C.LIFT	EATON	12		562763
C 387	EVAPORATOR COMPT. - BY–PASS VALVE	PED WP	2	561566	561690
C 387	BATTERY COMPT. – WCL ACCES.	AMP CPC	16	561639	561640
C 388	LUGG. COMPT.(4) – WCL DOOR ACCESS.	AMP MNL	12	561735	561736
C 389	EVAPORATOR COMPT. – WATER PUMP	PED WP	2	561566	561690
C 390	EVAPORATOR COMPT. – A/C JCT. BOX	DEUTSCH	24	562280	562283
C 391	CONDENSER COMPT. A/C PRESS SW 2 SP	PED WP	2	561566	561690
C 392					
C 393					
C 394	UNDER DASH - B/U MONITOR	AMP MNL	4	560851	560852
C 395	UNDER DASH - B/U MONITOR	CLARION	4		990335
C 396	PARCEL RACK – SPEAKER FEEDING	MOLEX	4	562507	562503
C 397					
C 398					
C 399	ENGINE GENERATOR (2)	PED WP	2	561566	561690
C 400	ENGINE COMPT. – BLOCK HEATER	PED WP	3	561781	561782
C 401					
C 402					
C 403	GALLEY – REFRIGERATOR		2		
C 404	GALLEY – LAMP SWITCH		2		
C 405	INVERTER SIGNAL	AMP MNL	2	561248	561247
C 406					
C 407					
C 408					
C 409					
C 410					
C 411					
C 412					
C 413					
C 414					
C 415					
C 416					
C 417					
C 418					
C 419	FR JCT BOX – RET/JAKE SELECTION	AMP MNL	3	561667	561550
C 420					
C 421	ENGINE COMPT. - WEBASTO	AMP FF	2	562473	562474
C 422	ENGINE COMPT. - WEBASTO	PED	2	562644	561597
C 423					
C 424	UNDER DASH – AUDIBLE FLASHER	AMP MNL	3	561667	561550
C 425					
C 426	ENGINE S60 RAD. FAN CLUTCH	PED WP	3	561781	561782
C 427					
C 428	RH SW PANEL – DASH LTS RHEOSTAT	AMP MNL	3	561667	561550
C 429					
C 430	LH CONSOLE – PRE-HEAT TIMER	AMP FF	8	561188	562363
C 431	LH CONSOLE – PRE-HEAT TIMER		1		560488

NO	LOCATION	TYPE	CAVITY	#PIN HOUSING	#SOCKET HOUSING
C 432					
C 433					
C 434					
C 435					
C 436					
C 437					
C 438					
C 439					
C 440					
C 441					
C 442					
C 443					
C 444					
C 445					
C 446					
C 447					
C 448					
C 449					
C 450	S.S. PANEL - FEEDING	MOLEX	4	562507	562503
C 451	S.S. PANEL - FEEDING	MOLEX	2	562550	562549
C 452	UNDER DASH – S.S. ACC. SIGNAL	MOLEX	2	562550	562549
C 453	S. S. PANEL – VCR FEEDING	PED WP	2	561566	561690
C 454	S. S. PANEL – VCR FEEDING	PED WP	2	561566	561690
C 455	PARCEL RACK – WIRELESS MICROPHONE	MOLEX	6		562464
C 456	WORLD TRANS. - RETARDER ACCUM.	PED MP	2		562427
C 457	WORLD TRANS. - MAIN CONNECTOR	DEUTSCH	31	562572	562536
C 458	WORLD TRANS. - TURBINE SP. SENS.	PED MP	2		562426
C 459	WORLD TRANS. - ENGINE SP. SENS.	PED MP	2		562426
C 460	WORLD TRANS. - SPEED SENSOR	ITT	2		562541
C 461	WORLD TRANS. - RETARDER TEMP.	PED MP	2		562856
C 462	WORLD TRANS. - RETARDER SOL. "K"	PED MP	2		562426
C 463	WORLD TRANS. - SENSOR CONN.	DEUTSCH	16	562570	562571
C 464	RR JCT BOX - DDL CONN	DEUTSCH	6		565360
C 465	LH CONSOLE - SHIFTER SELECTOR	PED	20		562825
C 466	FR SERVICE CPT - RESIS. MOD.	PED WP	3		562428
C 467	FR SERVICE CPT - RESIS. MOD.	PED WP	3		562428
C 468	STEERING COLUMN – RET. HAND LEVER	AMP FF	8	561188	562363
C 469	FR SERVICE COMPT. – RESIS. MOD.	AMP FF	8	561188	562363
C 470					
C 471					
C 472	FR SERVICE CPT – SILENT 1000 OR EATON	PED WP	2	561566	561690
C 473					
C 474	DRIVER'S TEMP SENSOR	AMP MNL	2	561248	561247
C 475	FR SERVICE CPT - SPEED SIGN. CONNECT.	DEUTSCH	6	562583	562581
C 475M	FR SERVICE CPT – SPEED SIGN. W. TR.	DEUTSCH	6	562583	562581
C 475W	FR SERVICE CPT – SPEED SIGN. W. TR.	DEUTSCH	6	562583	562581
C 476					
C 477					
C 478	FRONT ROOF – ELECTRONIC DEST. SIGN	AMP CPC	9	561636	561637
C 479	UNDER DASH – HVAC DASH MODULE	MOLEX	3		562783
C 480	UNDER DASH RH – DR'S FAN SPEED CTR	PED WP	4	561889	561890
C 481	UNDER DASH RH – DR'S FAN SPEED CTR	PED WP	3	561781	561782
C 482					
C 483	FR SERVICE CPT – ELECTRICAL SEAT	PED	2	562237	
C 484	UNDER DASH LH – FOOT DAMPER MOTOR	PED	2		562076
C 485	UNDER DASH LH – DASH & DEFR. DAMP. M.	AMP MNL	3	561667	561558
C 486	WCL ROOF DOOR – DOOR LT.	LEECRAFT	2	------	562803
C 487	S.S PANEL – AUDIO IN AMPLI	MOLEX	4	------	563071
C 488	S.S PANEL – AMPLI SIGNAL	MOLEX	8	------	562465
C 489	S.S PANEL – SPEAKER OUTLET	MOLEX	6	------	562464
C 490					
C 491					
C 492					
C 493					
C 494					

CONNECTORS CODE

NO	LOCATION	TYPE	CAVITY	#PIN HOUSING	#SOCKET HOUSING
C 495					
C 496					
C 497					
C 498					
C 499					
C 500	FR JCT PANEL - PRODRIVER	MOLEX	6	562070	562069
C 501					
C 502	LH DASH PANEL – PRE- HEAT SW.	EATON	12		562763
C 503	LH CONSOLE-PR0HEAT TIMER	PED MP	6	------	562878
C 504	LH CONSOLE -WEBASTO TIMER	AMP	8	------	562852
C 505	LH CONSOLE -ESPAR TIMER	AMP	12	------	562681
C 506	FR JCT BOX – DIGITAL CLOCK	AMP CPC	4	561685	561687
C 507	LH HAT RACK – DIGITAL CLOCK	MOLEX	4	561477	561476
C 508	RR JCT BOX - FAN CLUTCH RETARDER	AMP MNL	6	561552	561515
C 509	EVAP. COMPT. – NOT USED	DEUTSCH	5		562566
C 515	FR JCT BOX CPT. - INTERCOM	MOLEX	4	561477	561476
C 516	FR JCT BOX CPT. - INTERCOM	MOLEX	6	562070	562069
C 517	LAVATORY WALL - INTERCOM	MOLEX	6	562070	562069
C 519A	RH UNDER DASH – ENTRANCE DOOR SOL.	PNEUMAC	3		641385
C 519B	RH UNDER DASH – ENTRANCE DOOR SOL.	PNEUMAC	3		641385
C 520	RH UNDER DASH – ENTRANCE DOOR SOL.	PNEUMAC	3		641385
C 521	RH UNDER DASH – ENTRANCE DOOR SOL.	PNEUMAC	3		641385
C 522	FR JCT BOX – DAYTIME LTS MODULE	BOSCH	5		561183
C 523	FR JCT BOX – FUSE BLOCK	PED	8	562647	562646
C 524	FR JCT BOX – FUSE BLOCK	PED	8	562647	562646
C 525	FR JCT BOX – FUSE BLOCK	PED	8	562647	562646
C 526	FR JCT BOX – FUSE BLOCK	PED	8	562647	562646
C 527	FR JCT BOX – FUSE BLOCK	PED	8	562647	562646
C 528					
C 529					
C 530	RR JCT BOX – FUSE BLOCK	PED	8	562647	562646
C 531	RR JCT BOX – FUSE BLOCK	PED	8	562647	562646
C 532	LH PARCEL RACK – A/C LIQ. SOL.	AMP MNL	2	561248	561247
C 533	RH PARCEL RACK – A/C LIQ. SOL.	AMP MNL	2	561248	561247
C 534					
C 535					
C 536					
C 537	A/C JCT BOX RESISTOR SIGN. RLY	AMP MNL	2	561248	561247
C 538	FR SERV. CPT RH – OUTSIDE TEMP. SENS	AMP MNL	2	561248	561247
C 539	HVAC DASH MODULE OUTPUT CONN.	MOLEX	24		562780
C 540	HVAC DASH MODULE INPUT CONN.	MOLEX	22		562781
C 541					
C 542					
C 543					
C 544	S.S. PANEL – AUDIO SEAT	PED WP	3	561781	561782
C 545					
C 546	FR. JCT BOX – CHARGER WIRELESS MIC.	MOLEX	2		563025
C 547					
C 548	LH DASH PANEL – T.T.LT TEST SW.	EATON	12		562763
C 549	LH DASH PANEL – ENGINE FAN OVERRIDE	EATON	12		562763
C 550	LAST LUGG. CPT. -WCL MODULE	POLLAK	7	563350	563352
C 551	LAST LUGG. CPT. -WCL CASSETTE	POLLAK	7	563350	563352
C 552	LAST LUGG. CPT. -WCL REMOTE	AMP CPC	9	561636	561637
C 553	UNDER DASH – S.S. CONTROL HEAD	MOLEX	16		562559
C 554	UNDER DASH – S.S. CONTROL HEAD	MOLEX	16		562559
C 555	UNDER DASH – S.S. CONTROL HEAD	MOLEX	16		562559
C 556	UNDER DASH – RADIO FEEDING	MOLEX	2	562550	562549
C 557	UNDER DASH – RADIO FEEDING	MOLEX	9	562556	562555
C 558	FR. SERV. COMPT. – MIC. OUTLET	MOLEX	4	562507	562503
C 559					
C 560					
C 561	LH PARCEL RACK – WIRELESS MIC.	MOLEX	8		562465
C 562	LH PARCEL RACK – VCR SIGNAL	MOLEX	12		563070
C 563	FR. SERV. COMPT. – DRIVER SPEAKER	MOLEX	4	562507	562503
C 564	FR. SERV. COMPT. – MIC. OUTLET	MOLEX	4	562507	562503
C 565	FR. SERV. COMPT. – MIC. OUTLET	MOLEX	4	562507	562503
C 566	FR. SERV. COMPT. – MIC. OUTLET	MOLEX	4	562507	562503
C 567	FR. SERV. COMPT. – MIC. OUTLET	MOLEX	4	562507	562503
C 568	S.S. PANEL – SPEAKER OUTLET	CINTCH	4	562553	
C 569	S. S. PANEL – AMPLI SIGNAL	MOLEX	9	562556	562555
C 570	UNDER DASH PANEL – T.T.LT MODULE	MOLEX	6		562464
C 571	UNDER DASH PANEL – T.T.LT MODULE	MOLEX	20		562778
C 572	UNDER DASH PANEL – T.T.LT MODULE	MOLEX	18		562779
C 573	UNDER DASH PANEL – T.T.LT MODULE	MOLEX	8		562465
C 574	PARCEL RACK – INDIRECT LTS BALLAST	MOLEX			562759
C 575	RH PARCEL RACK - FFEDING	MOLEX	4	562507	562503
C 576	RH PARCEL RACK - FFEDING	AMP MNL	3	561667	561550
C 577	LH PARCEL RACK - FFEDING	AMP MNL	3	561667	561550
C 578	LH PARCEL RACK - FFEDING	MOLEX	4	562507	562503
C 579	LHPARCEL RACK-VCR POWER	MOLEX	4		563071
C 580	LH DASH PANEL – PARCEL RACK A/C SW.	EATON	12		562763
C 581	LH DASH PANEL – ELECTRICAL HORN	PED MP	2		562777
C 582					
C 583	LH DASH PANEL – MASTER KEY SW.	DEUTSCH	2	562486	562485
C 584	FR. SERVICE COMPT – HORN PNEU. VALVE	PNEUMAC	3		562848
C 585					
C 586	FR SERVICE COMPT – ACC. PNEU.VALVE	PNEUMAC	3		562848
C 587	LH PARCEL RACK DVD UNIT	MOLEX	4	563040	563071
C 588	FR SERV. COMPT. – S.S. INTERFACE	AMP CPC	37	561645	561646
C 589	FR. MIRROR LH	CONXALL	8	563163	563088
C 590	FR. MIRROR RH	CONXALL	8	563163	563088
C 591	LH CONSOLE – LH MIRROR SW.	EURAMT.	8		562749
C 592	LH CONSOLE – RH MIRROR SW.	EURAMT.	8		562749
C 594	FRONT ROOF – DRIVER'S LTS	LEEKRAFT	2	------	562803
C 595	RH DASH PANEL – ENTRANCE DOOR SW.	MOLEX	4	562507	562503
C 596	RH DASH PANEL – ENTRANCE DOOR SW.	MOLEX	4	562507	562503
C 597	LH DASH PANEL – DISPLAY SET SW.	AMP	5		562905
C 598	LH DASH PANEL – DISPLAY SET SW.	AMP	5		562905
C 599	UND. DASH – MAGN. SW CTR POS. DR'S AIR	AMP MNL	2	561248	561247
C 604	LH PARCEL RACK DVD VIDEO STABILIZER	SWITCHCRAFT	1	563074	
C 605	LH PARCEL RACK – A/C UNIT	AMP MNL	6	561552	561515
C 606	RH PARCEL RACK – A/C UNIT	AMP MNL	6	561552	561515
C 607					
C 608	FR SERV. COMPT – SPEED SIGNAL (SPARE)	PED WP	2	561566	561690
C 609					
C 610					
C 611	RH PARCEL RACK READING LTS WCL	MOLEX	6	562558	562557
C 612	RH PARCEL RACK LUOR. INSTATION LTS WCL	MOLEX	4	562507	562503
C 613	RH PARCEL RACK INDIRECT LTS WCL	AMP MNL	3	561667	561550
C 614	RH PARCEL RACK INDIRECT LTS WCL	AMP MNL	3	561667	561550
C 615	LH PARCEL RACK DVD SIGN ALONG ADAPTOR	MOLEX	2	562550	562549
C 701	ZF TRANSMISSION ECU	KOSTAL	20		
C 702	SHIFT SELECTOR – LH CONSOLE	AMP	14		563338
C 712	NEUTRAL SWITCH ON ZF TRANSM. (TOP)	AMP	4		563340
C 714	OUTPUT SENSOR ON ZF TRANSM. (BOTTOM)	AMP	4		563340
C 717	FR SERV. COMPT – MAIN CONN.	AMP CPC	22	561642	561643
C 720	ENGINE COMPT – BLKHD CONNECTOR	DEUTSCH	31	563359	563358
C 721	LH CONSOLE – ZF TESTMAN DIAG. TOOLS	AMP MNL	6	563356	
C 723	ENGINE COMPT – FOR TRANSM.	DEUTSCH	3		562884
C 736	FR SERV. COMPT – ZMTEC MODULE	PACKARD	30	563053	
C 740	ABOVE DRIVE AXLE – EASY START SOL VALVE	LEONI	2		641949
C 742	REAR JCT BOX - FUSE BLOCK	AMP	8	562446	
C 745	FR SERV COMPT – THROTTLE POS. SENSOR	PED WP	3	561781	
C 760	FR SERVICE COMPT – TO J1939	DEUTSCH	3		
C 761	FR SERVICE COMPT – TO J1939	DEUTSCH	3		562884
C 762	ENGINE COMPT – TO J1939	DEUTSCH	3		562884
C 763	ENGINE COMPT – TO J1939	DEUTSCH	3		562884
C 764	ENGINE COMPT – TO J1939	DEUTSCH	3		562884
C 765	ENGINE COMPT – TO J1939	DEUTSCH	3		562884
C 766	ENGINE COMPT – TO J1939	DEUTSCH	3		562884

CONNECTORS CODE

NO	LOCATION	TYPE	CAVITY	#PIN HOUSING	#SOCKET HOUSING
CS	FR SERVICE CPT - ECU WOLRD TR.	PED MP	32		562817
CT	FR SERVICE CPT - ECU WORLD TR.	PED MP	32		562824
CV	FR SERVICE CPT - ECU WORLD TR.	PED MP	32		562823
CX	CLUSTER	JAE	5		562957
CX 1	FR SERVICE CPT - ECU ABS	AMP JN	15		563200
CX 2	FR SERVICE CPT - ECU ABS	AMP JN	18		563201
CY	CLUSTER	JAE	30		562765
CW X1	ENGINE COMPT. – WATER HEATER	AMP	7	563134	563135
CW X3	ENGINE COMPT. – WATER HEATER	AMP	7	563134	563135
LX	CLUSTER	JAE	22		562766
LY	CLUSTER	JAE	30		562767
RX	CLUSTER	JAE	30		562767
WEB 1	ENGINE COMPT. - WEBASTO	AMP FF	2	562473	562474
WEB 2	ENGINE COMPT. - WEBASTO	AMP FF	2	562643	
ZF 1	FR JCT BOX – STEERING E.C.U.	HELLA	9		562929

NO	LOCATION	TYPE	CAVITY	#PIN HOUSING	#SOCKET HOUSING

CONNECTORS CODE

NO	LOCATION	TYPE	CAVITY	#PIN HOUSING	#SOCKET HOUSING
A 1	UNDER DASH – AUDIO SIGNAL	RCA	1	562090	562330
A 2	UNDER DASH – AUDIO SIGNAL	RCA	1	562090	562330
A 10	UNDER DASH – AUDIO SIGNAL	RCA	1	562090	562330
A 11	UNDER DASH – AUDIO SIGNAL	RCA	1	562090	562330
A 18	S. S. PANEL – AUDIO SIGNAL	RCA	1	562090	562330
A 19	S. S. PANEL – AUDIO SIGNAL	RCA	1	562090	562330
AA 1	UNDER DASH PANEL- SONALERT	BOSCH	5	------	561183
C 1	FR JCT BOX COMPARTIMENT	AMP CPC	14	561585	561584
C 2	FR JCT BOX COMPARTIMENT	AMP CPC	16	561638	561640
C 3	FR JCT BOX COMPARTIMENT	AMP CPC	37	561644	561646
C 4	FR JCT BOX COMPARTIMENT	AMP CPC	24	561641	561643
C 5	FR SERVICE COMPT. - UNDERNEATH	AMP CPC	37	561645	561646
C 6	FR SERVICE COMPT. - UNDERNEATH	AMP CPC	16	561639	561640
C 7	FR SERVICE COMPT - CLUTCH SW	ITT SS	3	561080	561111
C 8	FR SERVICE COMPT. - UNDERNEATH	AMP CPC	24	561642	561643
C 9	FR SERVICE COMPT. - UNDERNEATH	AMP CPC	24	561642	561643
C 10	FR SERVICE DOOR ACCESS.	DEUTSCH	5	562565	562566
C 11	FR SERV. CPT ACCESS	AMP CPC	37	561645	561646
C 12	FR SERV. CPT ACCESS	AMP CPC	16	561639	561640
C 13	FR JCT BOX COMPARTIMENT	AMP MNL	2	561248	561247
C 14	LAST LUGGAGE COMP(4) - DOCKING LTS	AMP MNL	2	561248	561247
C 15	UNDER STAIRS – CORNERING LTS	AMP MNL	2	560900	560898
C 16	LH CONSOLE SW-CRUISE ON/OFF	EATON	12	------	562763
C 17	LH CONSOLE SW-CRUISE RESUME	EATON	12		562763
C 18	LH CONSOLE SW-CRUISE SET	EATON	12		562763
C 19	LH CONSOLE SW-DECEL SW	EATON	12		562763
C 20	RR JCT BOX	DEUTSCH	70	562282	562285
C 21	ENGINE COMPT - LOCK DOOR MOT.	PED WP	2		562076
C 22	LUGGAGE COMPT (A) - A/C & FUEL TANK	AMP CPC	16	561639	561640
C 23	LUGGAGE COMPT (1) – LUGG. ACCESS.	AMP CPC	24	561642	561643
C 24	ENGINE COMPT. – INTERF RJB	PED WP	6	561606	561607
C 25	ENGINE COMPT. – INTERF RJB	PED WP	6	561606	561607
C 26	ENGINE COMPT. ACCESS	DEUTSCH	40	562281	562284
C 27	ENGINE COMPT. – INTERF. RJB	DEUTSCH	6	562583	562581
C 28	LUGGAGE COMPT(4) – LUGG. ACCESS	AMP CPC	24	561642	561643
C 29	FR SERVICE COMPT – E.C.U. FEED	PED WP	3	561781	561782
C 30	ENGINE COMPT – MASTER SW. SIGN.	DEUTSCH	2	562486	562485
C 31	RR JCT BOX – PARCEL RACK FEEDING	DEUTSCH	31	562572	562536
C 32					
C 33	FR SERV. COMPT. – VSS SIGNAL	PED WP	2	561566	561690
C 34	FR JCT BOX EATON TRANS. J1939	DEUTSCH	3	562877	562884
C 35	A/C COMPT - AIR RETURN SENSOR	AMP MNL	2	561248	561247
C 36	UNDER STAIRS – STEP LIGHTS	AMP MNL	2	561248	561247
C 36	RH PARCEL RACK – EMERGENCY LTS	AMP MNL	2	560900	560898
C 37	LH PARCEL RACK - FEEDING	MOLEX	6	562558	562557
C 38	RH PARCEL RACK - FEEDING	MOLEX	6	562558	562557
C 39	ENGINE COMPT. ECM J1939	DEUTSCH	3	562877	562884
C 40					
C 41	ENGINE COMPT – RH DOOR LOCK	DEUTSCH	4	562479	562477
C 42	ENGINE COMPT – RR CAP LIGHTING	DEUTSCH	6	562583	562581
C 43	FR JCT BOX – ALT. MODULE	AMP MNL	12	561735	561734
C 44	ENGINE COMPT - LIGHTS	GROTE	2		563268
C 45	FR JCT BOX COMPT – ROOF ACCESS	AMP CPC	24	561642	561643
C 46	ENGINE COMPT. ECM J1939	DEUTSCH	3	562877	562884
C 47					
C 48	FR SERV. CPT. PRESS SW PARK BRAKE	PED WP	2	561566	561690
C 49	LAVATORY ROOF – NIGHT LIGHT	AMP MNL	2	560900	560898
C 50	LAVATORY ROOF - LIGHT	LEECRAFT	2	-------	562803
C 50	LH SWITCH PANEL – SAFETY SW.	EATON	12	------	562763
C 51	FR SERV.CPT.PARK. BRAKE SOL. (SP. OPTION)	PED WP	2	561566	561690
C 52	ENGINE COMPT - COMPRESSOR	PED WP	2	561566	561690
C 53	ENGINE COMPT - COMPRESSOR	PED WP	2	561566	561690
C 54	FRONT ROOF – UPPER FAN DEFROST	AMP MNL	6	561552	561515
C 55	CENTRAL DOOR LOCK	DEUTSCH	4	562479	562477
C 56	LH PARCEL RACK - FEEDING	MOLEX	6	562558	562557

NO	LOCATION	TYPE	CAVITY	#PIN HOUSING	#SOCKET HOUSING
C 57	RH PARCEL RACK - FEEDING	MOLEX	6	562558	562557
C 58					
C 59					
C 60					
C 61	ENGINE COMPT - FUEL FILTER	PED WP	2	561566	561690
C 62	ENGINE COMPT – COMPR. AUX. PRESS. SW.	PED WP	2	561566	561690
C 63	ENGINE COMPT – COMPR. AUX. PRESS. SW.	PED WP	2	561566	561690
C 64					
C 65	ENGINE CPT – A/C PRESS SW FAN CLUTCH	PED WP	2	561566	561690
C 66	ENGINE CPT – SPARE CONNECTOR	PED WP	1	561605	561577
C 67					
C 68					
C 69					
C 70	LH CONSOLE	AMP CPC	16	561639	561640
C 71	FR JCT BOX COMPT.	AMP CPC	37	561645	561646
C 72	FR JCT BOX COMPT.	AMP CPC	24	561642	561643
C 73					
C 74	FR JCT BOX COMPT.	AMP CPC	37	561645	561646
C 75	SERVICE COMPT. EXT. ENTRANCE DOOR SW.	DEUTSCH	4	562479	562477
C 75	RH PARCEL RACK – READ. LTS FEED. WCL	MOLEX	6	562558	562557
C 76	ENGINE COMPT. FIRE DETECTOR	DEUTSCH	2	562486	562485
C 77	ENGINE COMPT. FIRE DETECTOR	DEUTSCH	2	562486	562485
C 78					
C 79					
C 80					
C 81	LUGGAGE COMPT - DOOR LOCK	AMP MNL	4	560851	560852
C 82	UNDER SEAT – AISLE LTS	AMP MNL	2	560900	560898
C 82	LUGGAGE COMPT - DOOR LOCK	AMP MNL	4	560851	560852
C 83	LUGGAGE COMPT - DOOR LOCK	AMP MNL	4	560851	560852
C 84	LUGGAGE COMPT - DOOR LOCK	AMP MNL	4	560851	560852
C 85					
C 86					
C 87					
C 88	FR SERV. CPT. PRESS SW PARK BRAKE	PED WP	2	561566	561690
C 89					
C 90					
C 91					
C 92	FR JCT BOX COMPT - ABS	AMP CPC	9	561635	561637
C 93					
C 94					
C 95					
C 96	FR SERVICE DOOR ACCESS	AMP MNL	9	561670	561669
C 97	FR SERVICE DOOR – WATER TANK	PED MP	2		562426
C 98					
C 99	FR SERVICE CPT. LTS	AMP MNL	2	561248	561247
C 100	SIDE (LH/FR & CENTER) DIR LTS	GROTE	2	-------	562155
C 101	FR SERVICE COMPT. ELEC. HORNS	PED WP	2	561566	561690
C 101	CONDENSER COMPT - A/C PRES. SW 1SP	PED WP	2	561566	561690
C 102	CONDENS. COMPT – LIQU. SOL. VAL. PRES.	PED WP	2	561566	561690
C 103	ENGINE COMPT. – LAVATORY FAN	PED WP	2	561566	561690
C 104	ENGINE COMPT. – LAVATORY PUMP	DEUTSCH	4	562479	562477
C 105	UNDER DASH RH - DRV LIO SOL VL	PED WP	2	561566	561690
C 106	UNDER DASH RH - DRV WTR VALVE	PED WP	2	561566	561690
C 107	ENGINE COMPT- LAVATORY PUSH BUTTON	PED WP	2	561566	561690
C 108	FR. SERICE COMPT – GAZ CYLINDER L.H.	DEUTSCH	2	562486	562485
C 109	SIDE (RH/FR & CENTER) DIR LTS	GROTE	2	-------	562155
C 110	SIDE (LH/FR) MARKER LTS	GROTE	2	-------	562155
C 111	SIDE (RH/FR) MARKER LTS	GROTE	2	-------	562155
C 112	SIDE (LH/CENTER) MARKER LTS	GROTE	2	-------	562155
C 113	SIDE (LH/RR) MARKER LTS	GROTE	2	-------	562155
C 114	ENGINE DDEC - SPEED SIGNAL	PED WP	2	561566	561690
C 115	RR JCT BOX – ENGINE ACCESS	DEUTSCH	40	562281	562284
C 116	SIDE (RH/CENTER) MARKER LTS	GROTE	2	-------	562155
C 117	SIDE (RH/RR) MARKER LTS	GROTE	2	-------	562155
C 118	ENGINE COMPT - LICENCE	DOM. AUT	2	930210	

CONNECTORS CODE

NO	LOCATION	TYPE	CAVITY	#PIN HOUSING	#SOCKET HOUSING
C 119	ENGINE COMPT - RH LOWER LAMP	PED WP	6	561606	561607
C 120	ENGINE COMPT - LH LOWER LAMP	PED WP	6	561606	561607
C 121	SIDE (RH/RR) DIR LTS	GROTE	2	-------	562155
C 122	SIDE (LH/RR) DIR LTS	GROTE	2	-------	562155
C 123					
C 124					
C 125					
C 126					
C 127					
C 128					
C 129					
C 130					
C 131					
C 132					
C 133					
C 134	FR JCT BOX – DIODE CONN.	AMP MNL	15	561987	561986
C 135	FR JCT BOX – DIODE CONN.	AMP MNL	15	561987	561986
C 136	FR JCT BOX – DIODE CONN.	AMP MNL	15	561987	561986
C 137	FR JCT BOX – DIODE CONN.	AMP MNL	15	561987	561986
C 138					
C 139					
C 140	HVAC DASH MODULE THERMOMETER	MOLEX	4		562782
C 141	RR DASH PANEL – LTS CONN. (SPARE)	AMP MNL	2	561248	561247
C 142	ENGINE COMPT. B/U ALARM	PED WP	2	561566	561690
C 143					
C 144	FR JCT BOX – AISLE LTS FEEDING	AMP MNL	2	561248	561247
C 145					
C 146					
C 147					
C 148					
C 149					
C 150					
C 151					
C 152					
C 153					
C 154					
C 155	EVAPORATOR CPT - WATER VALVE	BURKERT	3		563204
C 156					
C 157	FR SERV. CPT – WATER PUMP DR'S	PED WP	3	561781	561782
C 158	ENGINE CPT – DDEC INTERFACE CONNECTOR	DEUTSCH	31	562572	562536
C 159	ENGINE CPT – DDE FEED	PED WP	4	561889	561890
C 160	FR SERVICE CPT - INTERFACE	AMP CPC	37	561644	561646
C 161	ENGINE DDEC - ECM	AMP	68		563403
C 162	ENGINE DDEC - ACCESSORIES	PED WP	4	561610	561611
C 163	ENGINE CPT - COOLANT PROBE	PED MP	2		562350
C 164	ENGINE CPT – DDE FEED	PED WP	4	561889	561890
C 165					
C 166					
C 167	FR SERVICE CPT - EL. FOOT PEDAL	PED WP	3	561781	561782
C 168	FR SERVICE CPT - DDR	DEUTSCH	6	562360	
C 169	FR SERVICE CPT - WORLD TR. INTERFACE	AMP CPC	16	561639	561640
C 169	FR SERV. COMPT. – SPEED SWITCH	AMP	15	562011	562012
C 170	FR JCT BOX FLASHER UNIT	PED	2		561940
C 171	LH CONSOLE	AMP CPC	24	561642	561643
C 172	FR SERVICE COMPT – KNEELING PANEL	AMP CPC	16	561639	561640
C 172	ENGINE COMPT. – WATER TANK HEATER	PED WP	2	561566	561690
C 173					
C 174					
C 175					
C 176	UNDER DASH RH – WIPER PULSE	AMP FF	6		561186
C 177	UNDER DASH RH – WIPER MOTOR	AMP FF	6		561186
C 178					
C 179					
C 180	KNEELING PANEL – DIODE SOCKET	AMP MNL	15	561987	561986
C 181					

NO	LOCATION	TYPE	CAVITY	#PIN HOUSING	#SOCKET HOUSING
C 182					
C 183					
C 184	FR SERV. COMPT. – KNEELING PROX. SW.	ITT SS	3	561080	561111
C 185	KNEELING PANEL – DOWN SOL. VALVE	PNEUMAC	3		641385
C 186					
C 187	FR SERVICE JCT BOX - RESISTORS	AMP MNL	6	561552	561515
C 187	KNEELING PANEL– PARK BRAKE INTERLOCK	PNEUMAC	3		641385
C 188					
C 189	ENGINE COMPT – DOOR LIGHT BACK UP	TRUCK-LITE	2	562755	
C 190	ENGINE COMPT – DOOR LIGHT STOP/TURN	AMP SS	3		562601
C 191	ENGINE COMPT – DOOR LIGHT STOP/TURN	AMP SS	3		562601
C 192	ENGINE COMPT – DOOR LIGHT PARKING	AMP SS	3		562601
C 193					
C 194					
C 195					
C 196	KNEELING PANEL – UP SOL. VALVE	PNEUMAC	3		641385
C 197	KNEELING PANEL – CTR SOL. VALVE	PNEUMAC	3		641385
C 198					
C 199					
C 200	PARCEL RACK – FLUORESCENT LTS	AMP MNL	2	561248	561247
C 201	PARCEL RACK – FLUORESCENT LTS	AMP MNL	2	561248	561247
C 202	RH PARCEL RACK – INDIRECT LTS	MOLEX	2		562758
C 203	PARCEL RACK – FLUORESCENT LTS	MOLEX	6		562759
C 204	RH PARCEL RACK – RACK LTS	AMP MNL	2	560900	560858
C 205	RH PARCEL RACK – FEEDING	AMP MNL	9	561661	561662
C 206	RH PARCEL RACK – FEEDING	AMP FF	4	562760	562756
C 207	LH PARCEL RACK – FEEDING	AMP FF	4	562760	562756
C 208	PARCEL RACK – FLUORESCENT LTS	MOLEX	2		562758
C 209	LH PARCEL RACK – HOTESS CHIME	AMP MNL	3	561667	561550
C 210	LH PARCEL RACK – FEEDING	AMP MNL	9	561661	561662
C 211	FR ROOF – SUN VISOR LH	AMP MNL	2	560900	560898
C 212	FR ROOF – SUN VISOR RH	AMP MNL	2	560900	560898
C 213	WCL DOOR UP HING–DOOR READ & HOST. SW	AMP MNL	6	561552	561515
C 214					
C 215					
C 216					
C 217	RH PANEL SW. – SCENIC VIEW CAMERA	EATON	12		562763
C 218	RH PANEL SW. – LIGHTS SPARE	AMP MNL	2	560900	560898
C 219					
C 220					
C 221					
C 222	HEADLAMPS – LOW BEAM	HELLA	2		562623
C 222	HEADLAMPS – LOW BEAM (XENON OPTION)	PED MP	2		563366
C 223	HEAD LIGHTS - FLASHER	DEUTSCH	6	565131	562789
C 224	HEAD LIGHTS – HI BEAM	PED MP	3		562623
C 225	FOG LIGHTS	DEUTSCH	3	562902	562901
C 226	FLASHER (FR)	PED	3	562137	
C 226	BATT. COMPT. – INTERIOR LTS	AMP MNL	2	561248	561247
C 227					
C 228	A/C COMPRESSOR	PED WP	2	561566	
C 229	BATT. COMPT. – CHARGER 110V.	PED WP	1	561577	561605
C 230	ENGINE COMPT. – FUEL PRIME PUMP SW.	PED WP	2	561566	561690
C 231	ENGINE COMPT. – FUEL PRIME PUMP	PED WP	2	561566	561690
C 232					
C 233	FIRST LUGGAGE CPT.	VDO	8		562043
C 234	FIRST LUGGAGE CPT.	VDO	8		562044
C 235	FIRST LUGGAGE CPT.	VDO	8		562041
C 236	FIRST LUGGAGE CPT.	AMP MNL	4	560851	560858
C 236	FR SERVICE CPT CENTER - ABS	AMP CPC	14	561636	561637
C 237	FR AXLE CPT - ABS RH SENSOR	WABCO	2	641132	
C 238	FR AXLE CPT - ABS RH VALVE	WABCO	3	641098	
C 239	FR AXLE CPT - ABS LH VALVE	WABCO	3	641098	
C 240	FR AXLE CPT - ABS LH SENSOR	WABCO	2	641132	
C 241	LAST LUGGAGE COMPT - ABS	PED WP	6	561606	561607
C 242	DRIVE AXLE CPT - ABS LH SENSOR	WABCO	2	641132	

CONNECTORS CODE

NO	LOCATION	TYPE	CAVITY	#PIN HOUSING	#SOCKET HOUSING
C 243	DRIVE AXLE CPT - ABS LH VALVE	WABCO	3	641098	
C 244	DRIVE AXLE CPT - ABS RH VALVE	WABCO	3	641098	
C 245	DRIVE AXLE CPT - ABS RH SENSOR	WABCO	2	641132	
C 246	DRIVE AXLE CPT – ATC SOL.	PED WP	2	561566	561690
C 247	E.C.U. EATON TRANS.	PED MP	18		562573
C 248	LAST LUGGAGE CPT - ABS	PED WP	6	561606	561607
C 249	FR SERVICE CPT - ABS/DDEC	PED WP	2	561566	561690
C 250	LH CONSOLE – LOW BOUY	PED WP	2	561566	561690
C 251	LH SW PANEL – FAST IDLE	EATON	12		562763
C 252	LUGGAGE COMPT. – WINDOW AJAR	MOLEX	4	561477	561476
C 253	LH SWITCH PANEL - ETHER	EATON	12		562763
C 254					
C 255	LH SWITCH PANEL – ENGINE BRAKE	EATON	12		562763
C 256					
C 257					
C 258	LH SWITCH PANEL – MULTI FUNC. SW	AMP FF	8	561188	
C 259					
C 259	LH SWITCH PANEL – MULTI FUNC. SW	AMP FF	6		561186
C 260					
C 261					
C 262					
C 263	LUGGAGE COMPT. LTS COMPT #3	AMP MNL	2	561248	561247
C 264	LUGGAGE COMPT. LTS COMPT #2	AMP MNL	2	561248	561247
C 265	LUGGAGE COMPT. LTS COMPT #1	AMP MNL	2	561248	561247
C 266	ENTRACE DOOR KEYLESS	AMP CPC	14	561585	561583
C 267	UNDER DASH RH – ENT. DOOR PANEL	AMP CPC	24	561642	561643
C 268	FR MIRROR RH	CONXALL	5	563091	563090
C 269	FR MIRROR LH	CONXALL	5	563091	563090
C 270	LUGGAGE COMPT LTS - 3 LH	AMP MNL	2	561248	561247
C 271	LUGGAGE COMPT LTS - 4	AMP MNL	2	561248	561247
C 272					
C 273	ENT. DOOR PANEL – DIODE SOCKET	AMP MNL	9	561670	561669
C 274					
C 275	ENT. DOOR PANEL – DIODE SOCKET	AMP MNL	9	561670	561669
C 276					
C 277	RH UNDER DASH – ENT. DOOR REED SW.	AMP MNL	2	560900	560858
C 278	RH PASS. AIR DUCT – ENT DOOR PRESS SW.	PED WP	2	561566	561690
C 279	RH UNDER DASH – ENT. DOOR REED SW.	AMP MNL	2	560900	560858
C 279	FR SERVICE COMPT LH – STEERING ZF	DEUTSCH	2		562485
C 280	ENGINE COMPT – A/C COMPRESSOR AUX.	PED WP	2	561566	561690
C 281					
C 282	FR SERVICE COMPT – STEERING ZF	VOLVO	2		562928
C 283	LH CONSOLE – SPARE SW. LTS	AMP MNL	2	561248	561247
C 284	LH DR'S ROOF - MONITOR FEED	PED WP	3	561781	561782
C 285	LH DR'S ROOF – SOUND SYSTEM	AMP CPC	24	561642	561643
C 286					
C 287					
C 288					
C 289					
C 290	LUGGAGE CPT - DOOR LOCK	AMP MNL	4	560851	560852
C 291	LUGGAGE CPT - DOOR LOCK	AMP MNL	4	560851	560852
C 292	LH PARCEL RACK VIDEO PANEL– MONITOR	MOLEX	4	563040	563071
C 293	LH PARCEL RACK VIDEO PANEL – RCA RELAY	AMP MNL	2	561248	561247
C 294	LH PARCEL RACK VIDEO PANEL – RCA RELAY	AMP MNL	2	561248	561247
C 295	LH PARCEL RACK VID. PANEL– AMPLI VIDEO	MOLEX	4	563040	563071
C 296	LH PARCEL RACK VID. PANEL – MICRO SIGNAL	MOLEX	4	562507	562503
C 297					
C 298					
C 299	RH SWITCH PANEL - GALLEY	EATON	12		562763
C 300	FR JCT BOX – LOW BEAM RESISTOR	PED WP	2	561566	561690
C 301					
C 302					
C 303	RR JCT BOX - DIODES	AMP MNL	15	561987	561986
C 304	RR JCT BOX - DIODES	AMP MNL	15	561987	561986
C 305					

NO	LOCATION	TYPE	CAVITY	#PIN HOUSING	#SOCKET HOUSING
C 306					
C 307					
C 308					
C 309					
C 310	LH CONSOLE SW – LUG. DOOR LOCK	EATON	12		562763
C 311	RH SWITCH PANEL – HOTESS CHIME	EATON	12		562763
C 312	ENGINE DDEC - ACCESSORIES	PED WP	3	561781	561782
C 312	RH SWITCH PANEL – READING LAMP	EATON	12		562763
C 313					
C 313	RH SWITCH PANEL – INTERIOR LTS	EATON	12		562763
C 314	KNEELING PANEL – PRESS SW.	PED WP	2	561566	561690
C 314	RH SWITCH PANEL – INTERIOR LTS	EATON	12		562763
C 315	LH SWITCH PANEL – LH SUN VISOR SW.	EATON	12		562763
C 316	INTO HORN BOX – KNEELING BUZZER	DEUTSCH	2	562486	562485
C 317	LH SWITCH PANEL – RH SUN VISOR SW.	EATON	12		562763
C 318	LH CONSOLE SW – DR'S WINDOW SW.	EATON	12		562763
C 319	ENGINE DDEC - ECM POWER	PED	4	561610	561611
C 320	RT SWITCH PANEL – DRIVER'S LTS SW.	EATON	12		562763
C 321	UNDER DASH RH - KEYLESS MODULE	AMP COM	26		562676
C 322	UNDER DASH RH - KEYLESS MODULE	AMP COM	22		562675
C 323	DRIVER'S WINDOW MOTOR	PED	2		561848
C 324	LH SWITCH PANEL – UPPER FAN DEFROST	EATON	12		562763
C 325	LH SWITCH PANEL – KNEELING	EATON	12		562763
C 326					
C 327					
C 328	RR ROOF – GALLEY LAMP		2		
C 329					
C 330					
C 331					
C 332					
C 333					
C 334					
C 335					
C 336					
C 337					
C 338					
C 339	KNEELING PANEL – HI BUOY SOL. VALVE	PNEUMAC	3		641385
C 340	FR JCT BOX – FIRE PIEZO ALARM	AMP MNL	2	560900	560898
C 341	LH SWITCH PANEL – HEAT MIRROR SW.	EATON	12		562763
C 342					
C 343	LH SWITCH PANEL – HEAD LAMP SW.	EATON	12		562763
C 344	LH SWITCH PANEL – HAZARD LT SW.	EATON	12		562763
C 345	LH SWITCH PANEL – FOG LT SW.	EATON	12		562763
C 346					
C 347					
C 348	INSTR. PANEL CENT. – RACOR MODULE	MOLEX	6	562070	562069
C 349					
C 350					
C 351					
C 352					
C 353					
C 354					
C 355					
C 356					
C 357					
C 358					
C 359	RH SWITCH PANEL – ENT. DOOR WIND. SW.	EATON	12		562763
C 360	ENTRACE WINDOW MOTOR	PED	2		561848
C 361					
C 362					
C 363					
C 364	FRONT ROOF - ELECTRICAL DEST. SIGN	AMP MNL	3	561667	561550
C 365					
C 366					
C 367					

CONNECTORS CODE

NO	LOCATION	TYPE	CAVITY	#PIN HOUSING	#SOCKET HOUSING
C 368	FRONT ROOF – ELECTRICAL DEST. SIGN	AMP MNL	3	561667	561550
C 369	FRONT ROOF – ELECTRICAL DEST. SIGN	TORRIX	5	562110	
C 370	FRONT ROOF – ELECTRICAL DEST. SIGN	AMP MNL	2	560900	560858
C 371	FRONT ROOF – ELECTRICAL DEST. SIGN	AMP MNL	3	561667	561550
C 372	FRONT ROOF – ELECTRICAL DEST. SIGN	MOLEX	4	561477	561476
C 373					
C 374					
C 375					
C 376					
C 377	LH SWITCH PANEL – STOP ENGINE OVERIDE	EATON	12		562763
C 378					
C 379	LUGGAGE COMPT. – WINDOW AJAR SW.	MOLEX	4	561477	561476
C 380					
C 381	UNDER DASH PANEL – ANTI THILED	AMP MNL	2	561248	561247
C 382	ENGINE GENERATOR (1)	PED WP	1	561605	561577
C 383	ENGINE COMPT – VOLTAGE REGULATOR	PED WP	1	561605	561577
C 384					
C 385	BATT. COMPT. – BJB INTERFACE	AMP MNL	12	561735	561736
C 386	LH SWITCH PANEL – W.C.LIFT	EATON	12		562763
C 387	EVAPORATOR COMPT. - BY–PASS VALVE	PED WP	2	561566	561690
C 387	BATTERY COMPT. – WCL ACCES.	AMP CPC	16	561639	561640
C 388	LUGG. COMPT.(4) – WCL DOOR ACCESS.	AMP MNL	12	561735	561736
C 389	EVAPORATOR COMPT. – WATER PUMP	PED WP	2	561566	561690
C 390	EVAPORATOR COMPT. – A/C JCT. BOX	DEUTSCH	24	562280	562283
C 391	CONDENSER COMPT. A/C PRESS SW 2 SP	PED WP	2	561566	561690
C 392					
C 393					
C 394	UNDER DASH - B/U MONITOR	AMP MNL	4	560851	560852
C 395	UNDER DASH - B/U MONITOR	CLARION	4		990335
C 396	PARCEL RACK – SPEAKER FEEDING	MOLEX	4	562507	562503
C 397					
C 398					
C 399	ENGINE GENERATOR (2)	PED WP	2	561566	561690
C 400	ENGINE COMPT. – BLOCK HEATER	PED WP	3	561781	561782
C 401					
C 402					
C 403	GALLEY – REFRIGERATOR		2		
C 404	GALLEY – LAMP SWITCH		2		
C 405	INVERTER SIGNAL	AMP MNL	2	561248	561247
C 406					
C 407					
C 408					
C 409					
C 410					
C 411					
C 412					
C 413					
C 414					
C 415					
C 416					
C 417					
C 418					
C 419	FR JCT BOX – RET/JAKE SELECTION	AMP MNL	3	561667	561550
C 420					
C 421	ENGINE COMPT. - WEBASTO	AMP FF	2	562473	562474
C 422	ENGINE COMPT. - WEBASTO	PED	2	562644	561597
C 423					
C 424	UNDER DASH – AUDIBLE FLASHER	AMP MNL	3	561667	561550
C 425					
C 426	ENGINE S60 RAD. FAN CLUTCH	PED WP	3	561781	561782
C 427					
C 428	RH SW PANEL – DASH LTS RHEOSTAT	AMP MNL	3	561667	561550
C 429					
C 430	LH CONSOLE – PRE-HEAT TIMER	AMP FF	8	561188	562363
C 431	LH CONSOLE – PRE-HEAT TIMER		1		560488

NO	LOCATION	TYPE	CAVITY	#PIN HOUSING	#SOCKET HOUSING
C 432					
C 433					
C 434					
C 435					
C 436					
C 437					
C 438					
C 439					
C 440					
C 441					
C 442					
C 443					
C 444					
C 445					
C 446					
C 447					
C 448					
C 449					
C 450	S.S. PANEL - FEEDING	MOLEX	4	562507	562503
C 451	S.S. PANEL - FEEDING	MOLEX	2	562550	562549
C 452	UNDER DASH – S.S. ACC. SIGNAL	MOLEX	2	562550	562549
C 453	S. S. PANEL – VCR FEEDING	PED WP	2	561566	561690
C 454	S. S. PANEL – VCR FEEDING	PED WP	2	561566	561690
C 455	PARCEL RACK – WIRELESS MICROPHONE	MOLEX	6		562464
C 456	WORLD TRANS. - RETARDER ACCUM.	PED MP	2		562427
C 457	WORLD TRANS. - MAIN CONNECTOR	DEUTSCH	31	562572	562536
C 458	WORLD TRANS. - TURBINE SP. SENS.	PED MP	2		562426
C 459	WORLD TRANS. - ENGINE SP. SENS.	PED MP	2		562426
C 460	WORLD TRANS. - SPEED SENSOR	ITT	2		562541
C 461	WORLD TRANS. - RETARDER TEMP.	PED MP	2		562856
C 462	WORLD TRANS. - RETARDER SOL. "K"	PED MP	2		562426
C 463	WORLD TRANS. - SENSOR CONN.	DEUTSCH	16	562570	562571
C 464	RR JCT BOX - DDL CONN	DEUTSCH	6		565360
C 465	LH CONSOLE - SHIFTER SELECTOR	PED	20		562825
C 466	FR SERVICE CPT - RESIS. MOD.	PED WP	3		562428
C 467	FR SERVICE CPT - RESIS. MOD.	PED WP	3		562428
C 468	STEERING COLUMN – RET. HAND LEVER	AMP FF	8	561188	562363
C 469	FR SERVICE COMPT. – RESIS. MOD.	AMP FF	8	561188	562363
C 470					
C 471					
C 472	FR SERVICE CPT – SILENT 1000 OR EATON	PED WP	2	561566	561690
C 473					
C 474	DRIVER'S TEMP SENSOR	AMP MNL	2	561248	561247
C 475	FR SERVICE CPT - SPEED SIGN. CONNECT.	DEUTSCH	6	562583	562581
C 475M	FR SERVICE CPT – SPEED SIGN. W. TR.	DEUTSCH	6	562583	562581
C 475W	FR SERVICE CPT – SPEED SIGN. W. TR.	DEUTSCH	6	562583	562581
C 476					
C 477					
C 478	FRONT ROOF – ELECTRONIC DEST. SIGN	AMP CPC	9	561636	561637
C 479	UNDER DASH – HVAC DASH MODULE	MOLEX	3		562783
C 480	UNDER DASH RH – DR'S FAN SPEED CTR	PED WP	4	561889	561890
C 481	UNDER DASH RH – DR'S FAN SPEED CTR	PED WP	3	561781	561782
C 482					
C 483	FR SERVICE CPT – ELECTRICAL SEAT	PED	2	562237	
C 484	UNDER DASH LH – FOOT DAMPER MOTOR	PED	2		562076
C 485	UNDER DASH LH – DASH & DEFR. DAMP. M.	AMP MNL	3	561667	561558
C 486	WCL ROOF DOOR – DOOR LT.	LEECRAFT	2	------	562803
C 487	S.S PANEL – AUDIO IN AMPLI	MOLEX	4	------	563071
C 488	S.S PANEL – AMPLI SIGNAL	MOLEX	8	------	562465
C 489	S.S PANEL – SPEAKER OUTLET	MOLEX	6	------	562464
C 490					
C 491					
C 492					
C 493					
C 494					

CONNECTORS CODE

NO	LOCATION	TYPE	CAVITY	#PIN HOUSING	#SOCKET HOUSING
C 495					
C 496					
C 497					
C 498					
C 499					
C 500	FR JCT PANEL - PRODRIVER	MOLEX	6	562070	562069
C 501					
C 502	LH DASH PANEL – PRE- HEAT SW.	EATON	12		562763
C 503	LH CONSOLE-PR0HEAT TIMER	PED MP	6	------	562878
C 504	LH CONSOLE -WEBASTO TIMER	AMP	8	------	562852
C 505	LH CONSOLE -ESPAR TIMER	AMP	12	------	562681
C 506	FR JCT BOX – DIGITAL CLOCK	AMP CPC	4	561685	561687
C 507	LH HAT RACK – DIGITAL CLOCK	MOLEX	4	561477	561476
C 508	RR JCT BOX - FAN CLUTCH RETARDER	AMP MNL	6	561552	561515
C 509	EVAP. COMPT. – NOT USED	DEUTSCH	5		562566
C 515	FR JCT BOX CPT. - INTERCOM	MOLEX	4	561477	561476
C 516	FR JCT BOX CPT. - INTERCOM	MOLEX	6	562070	562069
C 517	LAVATORY WALL - INTERCOM	MOLEX	6	562070	562069
C 519A	RH UNDER DASH – ENTRANCE DOOR SOL.	PNEUMAC	3		641385
C 519B	RH UNDER DASH – ENTRANCE DOOR SOL.	PNEUMAC	3		641385
C 520	RH UNDER DASH – ENTRANCE DOOR SOL.	PNEUMAC	3		641385
C 521	RH UNDER DASH – ENTRANCE DOOR SOL.	PNEUMAC	3		641385
C 522	FR JCT BOX – DAYTIME LTS MODULE	BOSCH	5		561183
C 523	FR JCT BOX – FUSE BLOCK	PED	8	562647	562646
C 524	FR JCT BOX – FUSE BLOCK	PED	8	562647	562646
C 525	FR JCT BOX – FUSE BLOCK	PED	8	562647	562646
C 526	FR JCT BOX – FUSE BLOCK	PED	8	562647	562646
C 527	FR JCT BOX – FUSE BLOCK	PED	8	562647	562646
C 528					
C 529					
C 530	RR JCT BOX – FUSE BLOCK	PED	8	562647	562646
C 531	RR JCT BOX – FUSE BLOCK	PED	8	562647	562646
C 532	LH PARCEL RACK – A/C LIQ. SOL.	AMP MNL	2	561248	561247
C 533	RH PARCEL RACK – A/C LIQ. SOL.	AMP MNL	2	561248	561247
C 534					
C 535					
C 536					
C 537	A/C JCT BOX RESISTOR SIGN. RLY	AMP MNL	2	561248	561247
C 538	FR SERV. CPT RH – OUTSIDE TEMP. SENS	AMP MNL	2	561248	561247
C 539	HVAC DASH MODULE OUTPUT CONN.	MOLEX	24		562780
C 540	HVAC DASH MODULE INPUT CONN.	MOLEX	22		562781
C 541					
C 542					
C 543					
C 544	S.S. PANEL – AUDIO SEAT	PED WP	3	561781	561782
C 545					
C 546	FR. JCT BOX – CHARGER WIRELESS MIC.	MOLEX	2		563025
C 547					
C 548	LH DASH PANEL – T.T.LT TEST SW.	EATON	12		562763
C 549	LH DASH PANEL – ENGINE FAN OVERRIDE	EATON	12		562763
C 550	LAST LUGG. CPT. -WCL MODULE	POLLAK	7	563350	563352
C 551	LAST LUGG. CPT. -WCL CASSETTE	POLLAK	7	563350	563352
C 552	LAST LUGG. CPT. -WCL REMOTE	AMP CPC	9	561636	561637
C 553	UNDER DASH – S.S. CONTROL HEAD	MOLEX	16		562559
C 554	UNDER DASH – S.S. CONTROL HEAD	MOLEX	16		562559
C 555	UNDER DASH – S.S. CONTROL HEAD	MOLEX	16		562559
C 556	UNDER DASH – RADIO FEEDING	MOLEX	2	562550	562549
C 557	UNDER DASH – RADIO FEEDING	MOLEX	9	562556	562555
C 558	FR. SERV. COMPT. – MIC. OUTLET	MOLEX	4	562507	562503
C 559					
C 560					
C 561	LH PARCEL RACK – WIRELESS MIC.	MOLEX	8		562465
C 562	LH PARCEL RACK – VCR SIGNAL	MOLEX	12		563070
C 563	FR. SERV. COMPT. – DRIVER SPEAKER	MOLEX	4	562507	562503
C 564	FR. SERV. COMPT. – MIC. OUTLET	MOLEX	4	562507	562503
C 565	FR. SERV. COMPT. – MIC. OUTLET	MOLEX	4	562507	562503
C 566	FR. SERV. COMPT. – MIC. OUTLET	MOLEX	4	562507	562503
C 567	FR. SERV. COMPT. – MIC. OUTLET	MOLEX	4	562507	562503
C 568	S.S. PANEL – SPEAKER OUTLET	CINTCH	4	562553	
C 569	S. S. PANEL – AMPLI SIGNAL	MOLEX	9	562556	562555
C 570	UNDER DASH PANEL – T.T.LT MODULE	MOLEX	6		562464
C 571	UNDER DASH PANEL – T.T.LT MODULE	MOLEX	20		562778
C 572	UNDER DASH PANEL – T.T.LT MODULE	MOLEX	18		562779
C 573	UNDER DASH PANEL – T.T.LT MODULE	MOLEX	8		562465
C 574	PARCEL RACK – INDIRECT LTS BALLAST	MOLEX			562759
C 575	RH PARCEL RACK - FFEDING	MOLEX	4	562507	562503
C 576	RH PARCEL RACK - FFEDING	AMP MNL	3	561667	561550
C 577	LH PARCEL RACK - FFEDING	AMP MNL	3	561667	561550
C 578	LH PARCEL RACK - FFEDING	MOLEX	4	562507	562503
C 579	LHPARCEL RACK-VCR POWER	MOLEX	4		563071
C 580	LH DASH PANEL – PARCEL RACK A/C SW.	EATON	12		562763
C 581	LH DASH PANEL – ELECTRICAL HORN	PED MP	2		562777
C 582					
C 583	LH DASH PANEL – MASTER KEY SW.	DEUTSCH	2	562486	562485
C 584	FR. SERVICE COMPT – HORN PNEU. VALVE	PNEUMAC	3		562848
C 585					
C 586	FR SERVICE COMPT – ACC. PNEU.VALVE	PNEUMAC	3		562848
C 587	LH PARCEL RACK DVD UNIT	MOLEX	4	563040	563071
C 588	FR SERV. COMPT. – S.S. INTERFACE	AMP CPC	37	561645	561646
C 589	FR. MIRROR LH	CONXALL	8	563163	563088
C 590	FR. MIRROR RH	CONXALL	8	563163	563088
C 591	LH CONSOLE – LH MIRROR SW.	EURAMT.	8		562749
C 592	LH CONSOLE – RH MIRROR SW.	EURAMT.	8		562749
C 594	FRONT ROOF – DRIVER'S LTS	LEEKRAFT	2	------	562803
C 595	RH DASH PANEL – ENTRANCE DOOR SW.	MOLEX	4	562507	562503
C 596	RH DASH PANEL – ENTRANCE DOOR SW.	MOLEX	4	562507	562503
C 597	LH DASH PANEL – DISPLAY SET SW.	AMP	5		562905
C 598	LH DASH PANEL – DISPLAY SET SW.	AMP	5		562905
C 599	UND. DASH – MAGN. SW CTR POS. DR'S AIR	AMP MNL	2	561248	561247
C 604	LH PARCEL RACK DVD VIDEO STABILIZER	SWITCHCRAFT	1	563074	
C 605	LH PARCEL RACK – A/C UNIT	AMP MNL	6	561552	561515
C 606	RH PARCEL RACK – A/C UNIT	AMP MNL	6	561552	561515
C 607					
C 608	FR SERV. COMPT – SPEED SIGNAL (SPARE)	PED WP	2	561566	561690
C 609					
C 610					
C 611	RH PARCEL RACK READING LTS WCL	MOLEX	6	562558	562557
C 612	RH PARCEL RACK LUOR. INSTATION LTS WCL	MOLEX	4	562507	562503
C 613	RH PARCEL RACK INDIRECT LTS WCL	AMP MNL	3	561667	561550
C 614	RH PARCEL RACK INDIRECT LTS WCL	AMP MNL	3	561667	561550
C 615	LH PARCEL RACK DVD SIGN ALONG ADAPTOR	MOLEX	2	562550	562549
C 701	ZF TRANSMISSION ECU	KOSTAL	20		
C 702	SHIFT SELECTOR – LH CONSOLE	AMP	14		563338
C 712	NEUTRAL SWITCH ON ZF TRANSM. (TOP)	AMP	4		563340
C 714	OUTPUT SENSOR ON ZF TRANSM. (BOTTOM)	AMP	4		563340
C 717	FR SERV. COMPT – MAIN CONN.	AMP CPC	22	561642	561643
C 720	ENGINE COMPT – BLKHD CONNECTOR	DEUTSCH	31	563359	563358
C 721	LH CONSOLE – ZF TESTMAN DIAG. TOOLS	AMP MNL	6	563356	
C 723	ENGINE COMPT – FOR TRANSM.	DEUTSCH	3		562884
C 736	FR SERV. COMPT – ZMTEC MODULE	PACKARD	30	563053	
C 740	ABOVE DRIVE AXLE – EASY START SOL VALVE	LEONI	2		641949
C 742	REAR JCT BOX - FUSE BLOCK	AMP	8	562446	
C 745	FR SERV COMPT – THROTTLE POS. SENSOR	PED WP	3	561781	
C 760	FR SERVICE COMPT – TO J1939	DEUTSCH	3		
C 761	FR SERVICE COMPT – TO J1939	DEUTSCH	3		562884
C 762	ENGINE COMPT – TO J1939	DEUTSCH	3		562884
C 763	ENGINE COMPT – TO J1939	DEUTSCH	3		562884
C 764	ENGINE COMPT – TO J1939	DEUTSCH	3		562884
C 765	ENGINE COMPT – TO J1939	DEUTSCH	3		562884
C 766	ENGINE COMPT – TO J1939	DEUTSCH	3		562884

CONNECTORS CODE

NO	LOCATION	TYPE	CAVITY	#PIN HOUSING	#SOCKET HOUSING
CS	FR SERVICE CPT - ECU WOLRD TR.	PED MP	32		562817
CT	FR SERVICE CPT - ECU WORLD TR.	PED MP	32		562824
CTCI	ENGINE COMPT. – TURBO TEMP.	FCI	2		563404
CV	FR SERVICE CPT - ECU WORLD TR.	PED MP	32		562823
CX	CLUSTER	JAE	5		562957
CX 1	FR SERVICE CPT - ECU ABS	AMP JN	15		563200
CX 2	FR SERVICE CPT - ECU ABS	AMP JN	18		563201
CY	CLUSTER	JAE	30		562765
CW X1	ENGINE COMPT. – WATER HEATER	AMP	7	563134	563135
CW X3	ENGINE COMPT. – WATER HEATER	AMP	7	563134	563135
LX	CLUSTER	JAE	22		562766
LY	CLUSTER	JAE	30		562767
RX	CLUSTER	JAE	30		562767
WEB 1	ENGINE COMPT. - WEBASTO	AMP FF	2	562473	562474
WEB 2	ENGINE COMPT. - WEBASTO	AMP FF	2	562643	
ZF 1	FR JCT BOX – STEERING E.C.U.	HELLA	9		562929

NO	LOCATION	TYPE	CAVITY	#PIN HOUSING	#SOCKET HOUSING

CONNECTORS CODE

NO	LOCATION	TYPE	CAVITY	#PIN HOUSING	#SOCKET HOUSING
A 1	UNDER DASH – AUDIO SIGNAL	RCA	1	562090	562330
A 2	UNDER DASH – AUDIO SIGNAL	RCA	1	562090	562330
A 10	UNDER DASH – AUDIO SIGNAL	RCA	1	562090	562330
A 11	UNDER DASH – AUDIO SIGNAL	RCA	1	562090	562330
A 18	S. S. PANEL – AUDIO SIGNAL	RCA	1	562090	562330
A 19	S. S. PANEL – AUDIO SIGNAL	RCA	1	562090	562330
AA 1	UNDER DASH PANEL- SONALERT	BOSCH	5	------	561183
C 1	FR JCT BOX COMPARTIMENT	AMP CPC	14	561585	561584
C 2	FR JCT BOX COMPARTIMENT	AMP CPC	16	561638	561640
C 3	FR JCT BOX COMPARTIMENT	AMP CPC	37	561644	561646
C 4	FR JCT BOX COMPARTIMENT	AMP CPC	24	561641	561643
C 5	FR SERVICE COMPT. - UNDERNEATH	AMP CPC	37	561645	561646
C 6	FR SERVICE COMPT. - UNDERNEATH	AMP CPC	16	561639	561640
C 7	FR SERVICE COMPT - CLUTCH SW	ITT SS	3	561080	561111
C 8	FR SERVICE COMPT. - UNDERNEATH	AMP CPC	24	561642	561643
C 9	FR SERVICE COMPT. - UNDERNEATH	AMP CPC	24	561642	561643
C 10	FR SERVICE DOOR ACCESS.	DEUTSCH	5	562565	562566
C 11	FR SERV. CPT ACCESS	AMP CPC	37	561645	561646
C 12	FR SERV. CPT ACCESS	AMP CPC	16	561639	561640
C 13	FR JCT BOX COMPARTIMENT	AMP MNL	2	561248	561247
C 14	LAST LUGGAGE COMP(4) - DOCKING LTS	AMP MNL	2	561248	561247
C 15	UNDER STAIRS – CORNERING LTS	AMP MNL	2	560900	560898
C 16	LH CONSOLE SW-CRUISE ON/OFF	EATON	12	------	562763
C 17	LH CONSOLE SW-CRUISE RESUME	EATON	12		562763
C 18	LH CONSOLE SW-CRUISE SET	EATON	12		562763
C 19	LH CONSOLE SW-DECEL SW	EATON	12		562763
C 20	RR JCT BOX	DEUTSCH	70	562282	562285
C 21	ENGINE COMPT - LOCK DOOR MOT.	PED WP	2		562076
C 22	LUGGAGE COMPT (A) - A/C & FUEL TANK	AMP CPC	16	561639	561640
C 23	LUGGAGE COMPT (1) – LUGG. ACCESS.	AMP CPC	24	561642	561643
C 24	ENGINE COMPT. – INTERF RJB	PED WP	6	561606	561607
C 25	ENGINE COMPT. – INTERF RJB	PED WP	6	561606	561607
C 26	ENGINE COMPT. ACCESS	DEUTSCH	40	562281	562284
C 27	ENGINE COMPT. – INTERF. RJB	DEUTSCH	6	562583	562581
C 28	LUGGAGE COMPT(4) – LUGG. ACCESS	AMP CPC	24	561642	561643
C 29	FR SERVICE COMPT – E.C.U. FEED	PED WP	3	561781	561782
C 29	LAST LUGG. CPT. -WCL CASSETTE	COLE HER.	12	563652	563651
C 30	ENGINE COMPT – MASTER SW. SIGN.	DEUTSCH	2	562486	562485
C 30	LAST LUGG. CPT. -WCL MODULE	AMP CPC	22	561709	561710
C 31	RR JCT BOX – PARCEL RACK FEEDING	DEUTSCH	31	562572	562536
C 32					
C 33	FR SERV. COMPT. – VSS SIGNAL	PED WP	2	561566	561690
C 34	FR JCT BOX EATON TRANS. J1939	DEUTSCH	3	562877	562884
C 35	A/C COMPT - AIR RETURN SENSOR	AMP MNL	2	561248	561247
C 36	UNDER STAIRS – STEP LIGHTS	AMP MNL	2	561248	561247
C 36	RH PARCEL RACK – EMERGENCY LTS	AMP MNL	2	560900	560898
C 37	LH PARCEL RACK - FEEDING	MOLEX	6	562558	562557
C 38	RH PARCEL RACK - FEEDING	MOLEX	6	562558	562557
C 39	ENGINE COMPT. ECM J1939	DEUTSCH	3	562877	562884
C 40					
C 41	ENGINE COMPT – RH DOOR LOCK	DEUTSCH	4	562479	562477
C 42	ENGINE COMPT – RR CAP LIGHTING	DEUTSCH	6	562583	562581
C 43	FR JCT BOX – ALT. MODULE	AMP MNL	12	561735	561734
C 44	ENGINE COMPT - LIGHTS	GROTE	2		563268
C 45	FR JCT BOX COMPT – ROOF ACCESS	AMP CPC	24	561642	561643
C 46	ENGINE COMPT. ECM J1939	DEUTSCH	3	562877	562884
C 47					
C 48	FR SERV. CPT. PRESS SW PARK BRAKE	PED WP	2	561566	561690
C 49	LAVATORY ROOF – NIGHT LIGHT	AMP MNL	2	560900	560898
C 50	LAVATORY ROOF - LIGHT	LEECRAFT	2	-------	562803
C 50	LH SWITCH PANEL – SAFETY SW.	EATON	12	------	562763
C 51	FR SERV.CPT.PARK. BRAKE SOL. (SP. OPTION)	PED WP	2	561566	561690
C 52	ENGINE COMPT - COMPRESSOR	PED WP	2	561566	561690
C 53	ENGINE COMPT - COMPRESSOR	PED WP	2	561566	561690
C 54	FRONT ROOF – UPPER FAN DEFROST	AMP MNL	6	561552	561515

NO	LOCATION	TYPE	CAVITY	#PIN HOUSING	#SOCKET HOUSING
C 55	CENTRAL DOOR LOCK	DEUTSCH	4	562479	562477
C 56	LH PARCEL RACK - FEEDING	MOLEX	6	562558	562557
C 57	RH PARCEL RACK - FEEDING	MOLEX	6	562558	562557
C 58					
C 59					
C 60					
C 61	ENGINE COMPT - FUEL FILTER	PED WP	2	561566	561690
C 62	ENGINE COMPT – COMPR. AUX. PRESS. SW.	PED WP	2	561566	561690
C 63	ENGINE COMPT – COMPR. AUX. PRESS. SW.	PED WP	2	561566	561690
C 64					
C 65	ENGINE CPT – A/C PRESS SW FAN CLUTCH	PED WP	2	561566	561690
C 66	ENGINE CPT – SPARE CONNECTOR	PED WP	1	561605	561577
C 67					
C 68					
C 69					
C 70	LH CONSOLE	AMP CPC	16	561639	561640
C 71	FR JCT BOX COMPT.	AMP CPC	37	561645	561646
C 72	FR JCT BOX COMPT.	AMP CPC	24	561642	561643
C 73					
C 74	FR JCT BOX COMPT.	AMP CPC	37	561645	561646
C 75	SERVICE COMPT. EXT. ENTRANCE DOOR SW.	DEUTSCH	4	562479	562477
C 75	RH PARCEL RACK – READ. LTS FEED. WCL	MOLEX	6	562558	562557
C 76	ENGINE COMPT. FIRE DETECTOR	DEUTSCH	2	562486	562485
C 77	ENGINE COMPT. FIRE DETECTOR	DEUTSCH	2	562486	562485
C 78					
C 79					
C 80					
C 81	LUGGAGE COMPT - DOOR LOCK	AMP MNL	4	560851	560852
C 82	UNDER SEAT – AISLE LTS	AMP MNL	2	560900	560898
C 82	LUGGAGE COMPT - DOOR LOCK	AMP MNL	4	560851	560852
C 83	LUGGAGE COMPT - DOOR LOCK	AMP MNL	4	560851	560852
C 84	LUGGAGE COMPT - DOOR LOCK	AMP MNL	4	560851	560852
C 85					
C 86					
C 87					
C 88	FR SERV. CPT. PRESS SW PARK BRAKE	PED WP	2	561566	561690
C 89					
C 90					
C 91					
C 92	FR JCT BOX COMPT - ABS	AMP CPC	9	561635	561637
C 93					
C 94					
C 95					
C 96	FR SERVICE DOOR ACCESS	AMP MNL	9	561670	561669
C 97	FR SERVICE DOOR – WATER TANK	PED MP	2		562426
C 98					
C 99	FR SERVICE CPT. LTS	AMP MNL	2	561248	561247
C 100	SIDE (LH/FR & CENTER) DIR LTS	GROTE	2	-------	562155
C 101	FR SERVICE COMPT. ELEC. HORNS	PED WP	2	561566	561690
C 101	CONDENSER COMPT - A/C PRES. SW 1SP	PED WP	2	561566	561690
C 102	CONDENS. COMPT – LIQU. SOL. VAL. PRES.	PED WP	2	561566	561690
C 102	BATTERIE COMPT.	PED WP	2	561566	561690
C 103	ENGINE COMPT. – LAVATORY FAN	PED WP	2	561566	561690
C 104	ENGINE COMPT. – LAVATORY PUMP	DEUTSCH	4	562479	562477
C 105	UNDER DASH RH - DRV LIO SOL VL	PED WP	2	561566	561690
C 106	UNDER DASH RH - DRV WTR VALVE	PED WP	2	561566	561690
C 107	ENGINE COMPT- LAVATORY PUSH BUTTON	PED WP	2	561566	561690
C 108	FR. SERICE COMPT – GAZ CYLINDER L.H.	DEUTSCH	2	562486	562485
C 109	SIDE (RH/FR & CENTER) DIR LTS	GROTE	2	-------	562155
C 110	SIDE (LH/FR) MARKER LTS	GROTE	2	-------	562155
C 111	SIDE (RH/FR) MARKER LTS	GROTE	2	-------	562155
C 112	SIDE (LH/CENTER) MARKER LTS	GROTE	2	-------	562155
C 113	SIDE (LH/RR) MARKER LTS	GROTE	2	-------	562155
C 114	ENGINE DDEC - SPEED SIGNAL	PED WP	2	561566	561690
C 115	RR JCT BOX – ENGINE ACCESS	DEUTSCH	40	562281	562284

CONNECTORS CODE

NO	LOCATION	TYPE	CAVITY	#PIN HOUSING	#SOCKET HOUSING
C 116	SIDE (RH/CENTER) MARKER LTS	GROTE	2	-------	562155
C 117	SIDE (RH/RR) MARKER LTS	GROTE	2	-------	562155
C 118	ENGINE COMPT - LICENCE	DOM. AUT	2	930210	
C 119	ENGINE COMPT - RH LOWER LAMP	PED WP	6	561606	561607
C 120	ENGINE COMPT - LH LOWER LAMP	PED WP	6	561606	561607
C 121	SIDE (RH/RR) DIR LTS	GROTE	2	-------	562155
C 122	SIDE (LH/RR) DIR LTS	GROTE	2	-------	562155
C 123					
C 124					
C 125					
C 126					
C 127					
C 128					
C 129					
C 130					
C 131					
C 132					
C 133					
C 134	FR JCT BOX – DIODE CONN.	AMP MNL	15	561987	561986
C 135	FR JCT BOX – DIODE CONN.	AMP MNL	15	561987	561986
C 136	FR JCT BOX – DIODE CONN.	AMP MNL	15	561987	561986
C 137	FR JCT BOX – DIODE CONN.	AMP MNL	15	561987	561986
C 138					
C 139					
C 140	HVAC DASH MODULE THERMOMETER	MOLEX	4		562782
C 141	RR DASH PANEL – LTS CONN. (SPARE)	AMP MNL	2	561248	561247
C 142	ENGINE COMPT. B/U ALARM	PED WP	2	561566	561690
C 143					
C 144	FR JCT BOX – AISLE LTS FEEDING	AMP MNL	2	561248	561247
C 145					
C 146					
C 147					
C 148					
C 149					
C 150					
C 151					
C 152					
C 153					
C 154					
C 155	EVAPORATOR CPT - WATER VALVE	BURKERT	3		563204
C 156					
C 157	FR SERV. CPT – WATER PUMP DR'S	PED WP	3	561781	561782
C 158	ENGINE CPT – DDEC INTERFACE CONNECTOR	DEUTSCH	31	562572	562536
C 159	ENGINE CPT – DDE FEED	PED WP	4	561889	561890
C 160	FR SERVICE CPT - INTERFACE	AMP CPC	37	561644	561646
C 161	ENGINE DDEC - ECM	AMP	68		563403
C 162	ENGINE DDEC - ACCESSORIES	PED WP	4	561610	561611
C 163	ENGINE CPT - COOLANT PROBE	PED MP	2		562350
C 164	ENGINE CPT – DDE FEED	PED WP	4	561889	561890
C 165					
C 166					
C 167	FR SERVICE CPT - EL. FOOT PEDAL	PED WP	3	561781	561782
C 168	FR SERVICE CPT - DDR	DEUTSCH	6	562360	
C 169	FR SERVICE CPT - WORLD TR. INTERFACE	AMP CPC	16	561639	561640
C 169	FR SERV. COMPT. – SPEED SWITCH	AMP	15	562011	562012
C 170	FR JCT BOX FLASHER UNIT	PED	2		561940
C 171	LH CONSOLE	AMP CPC	24	561642	561643
C 172	FR SERVICE COMPT – KNEELING PANEL	AMP CPC	16	561639	561640
C 172	ENGINE COMPT. – WATER TANK HEATER	PED WP	2	561566	561690
C 173					
C 174					
C 175					
C 176	UNDER DASH RH – WIPER PULSE	AMP FF	6		561186
C 177	UNDER DASH RH – WIPER MOTOR	AMP FF	6		561186
C 178					

NO	LOCATION	TYPE	CAVITY	#PIN HOUSING	#SOCKET HOUSING
C 179					
C 180	KNEELING PANEL – DIODE SOCKET	AMP MNL	15	561987	561986
C 181					
C 182					
C 183					
C 184	FR SERV. COMPT. – KNEELING PROX. SW.	ITT SS	3	561080	561111
C 185	KNEELING PANEL – DOWN SOL. VALVE	PNEUMAC	3		641385
C 186					
C 187	FR SERVICE JCT BOX - RESISTORS	AMP MNL	6	561552	561515
C 187	KNEELING PANEL– PARK BRAKE INTERLOCK	PNEUMAC	3		641385
C 188	KNEELING UP ALARM – NJ COACHE ONLY	AMP MNL	15	561987	561986
C 189	ENGINE COMPT – DOOR LIGHT BACK UP	TRUCK-LITE	2	562755	
C 190	ENGINE COMPT – DOOR LIGHT STOP/TURN	AMP SS	3		562601
C 191	ENGINE COMPT – DOOR LIGHT STOP/TURN	AMP SS	3		562601
C 192	ENGINE COMPT – DOOR LIGHT PARKING	AMP SS	3		562601
C 193					
C 194					
C 195					
C 196	KNEELING PANEL – UP SOL. VALVE	PNEUMAC	3		641385
C 197	KNEELING PANEL – CTR SOL. VALVE	PNEUMAC	3		641385
C 198					
C 199					
C 200	PARCEL RACK – FLUORESCENT LTS	AMP MNL	2	561248	561247
C 201	PARCEL RACK – FLUORESCENT LTS	AMP MNL	2	561248	561247
C 202	RH PARCEL RACK – INDIRECT LTS	MOLEX	2		562758
C 203	PARCEL RACK – FLUORESCENT LTS	MOLEX	6		562759
C 204	RH PARCEL RACK – RACK LTS	AMP MNL	2	560900	560858
C 205	RH PARCEL RACK – FEEDING	AMP MNL	9	561661	561662
C 206	RH PARCEL RACK – FEEDING	AMP FF	4	562760	562756
C 207	LH PARCEL RACK – FEEDING	AMP FF	4	562760	562756
C 208	PARCEL RACK – FLUORESCENT LTS	MOLEX	2		562758
C 209	LH PARCEL RACK – HOTESS CHIME	AMP MNL	3	561667	561550
C 210	LH PARCEL RACK – FEEDING	AMP MNL	9	561661	561662
C 211	FR ROOF – SUN VISOR LH	AMP MNL	2	560900	560898
C 212	FR ROOF – SUN VISOR RH	AMP MNL	2	560900	560898
C 213	WCL DOOR UP HING–DOOR READ & HOST. SW	AMP MNL	6	561552	561515
C 214					
C 215					
C 216					
C 217	RH PANEL SW. – SCENIC VIEW CAMERA	EATON	12		562763
C 218	RH PANEL SW. – LIGHTS SPARE	AMP MNL	2	560900	560898
C 219					
C 220					
C 221					
C 222	HEADLAMPS – LOW BEAM	HELLA	2		562623
C 222	HEADLAMPS – LOW BEAM (XENON OPTION)	PED MP	2		563366
C 223	HEAD LIGHTS - FLASHER	DEUTSCH	6	565131	562789
C 224	HEAD LIGHTS – HI BEAM	PED MP	3		562623
C 225	FOG LIGHTS	DEUTSCH	3	562902	562901
C 226	FLASHER (FR)	PED	3	562137	
C 226	BATT. COMPT. – INTERIOR LTS	AMP MNL	2	561248	561247
C 227					
C 228	A/C COMPRESSOR	PED WP	2	561566	
C 229	BATT. COMPT. – CHARGER 110V.	PED WP	1	561577	561605
C 230	ENGINE COMPT. – FUEL PRIME PUMP SW.	PED WP	2	561566	561690
C 231	ENGINE COMPT. – FUEL PRIME PUMP	PED WP	2	561566	561690
C 232					
C 233	FIRST LUGGAGE CPT.	VDO	8		562043
C 234	FIRST LUGGAGE CPT.	VDO	8		562044
C 235	FIRST LUGGAGE CPT.	VDO	8		562041
C 236	FIRST LUGGAGE CPT.	AMP MNL	4	560851	560858
C 236	FR SERVICE CPT CENTER - ABS	AMP CPC	14	561636	561637
C 237	FR AXLE CPT - ABS RH SENSOR	WABCO	2	641132	
C 238	FR AXLE CPT - ABS RH VALVE	WABCO	3	641098	
C 239	FR AXLE CPT - ABS LH VALVE	WABCO	3	641098	

CONNECTORS CODE

NO	LOCATION	TYPE	CAVITY	#PIN HOUSING	#SOCKET HOUSING
C 240	FR AXLE CPT - ABS LH SENSOR	WABCO	2	641132	
C 241	LAST LUGGAGE COMPT - ABS	PED WP	6	561606	561607
C 242	DRIVE AXLE CPT - ABS LH SENSOR	WABCO	2	641132	
C 243	DRIVE AXLE CPT - ABS LH VALVE	WABCO	3	641098	
C 244	DRIVE AXLE CPT - ABS RH VALVE	WABCO	3	641098	
C 245	DRIVE AXLE CPT - ABS RH SENSOR	WABCO	2	641132	
C 246	DRIVE AXLE CPT – ATC SOL.	PED WP	2	561566	561690
C 247	E.C.U. EATON TRANS.	PED MP	18		562573
C 248	LAST LUGGAGE CPT - ABS	PED WP	6	561606	561607
C 249	FR SERVICE CPT - ABS/DDEC	PED WP	2	561566	561690
C 250	LH CONSOLE – LOW BOUY	PED WP	2	561566	561690
C 251	LH SW PANEL – FAST IDLE	EATON	12		562763
C 252	LUGGAGE COMPT. – WINDOW AJAR	MOLEX	4	561477	561476
C 253	LH SWITCH PANEL - ETHER	EATON	12		562763
C 254					
C 255	LH SWITCH PANEL – ENGINE BRAKE	EATON	12		562763
C 256					
C 257					
C 258	LH SWITCH PANEL – MULTI FUNC. SW	AMP FF	8	561188	
C 259					
C 259	LH SWITCH PANEL – MULTI FUNC. SW	AMP FF	6		561186
C 260					
C 261					
C 262					
C 263	LUGGAGE COMPT. LTS COMPT #3	AMP MNL	2	561248	561247
C 264	LUGGAGE COMPT. LTS COMPT #2	AMP MNL	2	561248	561247
C 265	LUGGAGE COMPT. LTS COMPT #1	AMP MNL	2	561248	561247
C 266	ENTRACE DOOR KEYLESS	AMP CPC	14	561585	561583
C 267	UNDER DASH RH – ENT. DOOR PANEL	AMP CPC	24	561642	561643
C 268	FR MIRROR RH	CONXALL	5	563091	563090
C 269	FR MIRROR LH	CONXALL	5	563091	563090
C 270	LUGGAGE COMPT LTS - 3 LH	AMP MNL	2	561248	561247
C 271	LUGGAGE COMPT LTS - 4	AMP MNL	2	561248	561247
C 272					
C 273	ENT. DOOR PANEL – DIODE SOCKET	AMP MNL	9	561670	561669
C 274					
C 275	ENT. DOOR PANEL – DIODE SOCKET	AMP MNL	9	561670	561669
C 276					
C 277	RH UNDER DASH – ENT. DOOR REED SW.	AMP MNL	2	560900	560858
C 278	RH PASS. AIR DUCT – ENT DOOR PRESS SW.	PED WP	2	561566	561690
C 279	RH UNDER DASH – ENT. DOOR REED SW.	AMP MNL	2	560900	560858
C 279	FR SERVICE COMPT LH – STEERING ZF	DEUTSCH	2		562485
C 280	ENGINE COMPT – A/C COMPRESSOR AUX.	PED WP	2	561566	561690
C 281					
C 282	FR SERVICE COMPT – STEERING ZF	VOLVO	2		562928
C 283	LH CONSOLE – SPARE SW. LTS	AMP MNL	2	561248	561247
C 284	LH DR'S ROOF - MONITOR FEED	PED WP	3	561781	561782
C 285	LH DR'S ROOF – SOUND SYSTEM	AMP CPC	24	561642	561643
C 286					
C 287					
C 288					
C 289					
C 290	LUGGAGE CPT - DOOR LOCK	AMP MNL	4	560851	560852
C 291	LUGGAGE CPT - DOOR LOCK	AMP MNL	4	560851	560852
C 292	LH PARCEL RACK VIDEO PANEL– MONITOR	MOLEX	4	563040	563071
C 293	LH PARCEL RACK VIDEO PANEL – RCA RELAY	AMP MNL	2	561248	561247
C 294	LH PARCEL RACK VIDEO PANEL – RCA RELAY	AMP MNL	2	561248	561247
C 295	LH PARCEL RACK VID. PANEL– AMPLI VIDEO	MOLEX	4	563040	563071
C 296	LH PARCEL RACK VID. PANEL – MICRO SIGNAL	MOLEX	4	562507	562503
C 297					
C 298	LH PARCEL RACK-12V ALIM. RADIO	PED WP	3	561781	561782
C 299	RH SWITCH PANEL - GALLEY	EATON	12		562763
C 300	FR JCT BOX – LOW BEAM RESISTOR	PED WP	2	561566	561690
C 301	FR SERV. CPT ACCESS – DR'S FAN SPEED	PED WP	1	561605	561577
C 302					

NO	LOCATION	TYPE	CAVITY	#PIN HOUSING	#SOCKET HOUSING
C 303	RR JCT BOX - DIODES	AMP MNL	15	561987	561986
C 304	RR JCT BOX - DIODES	AMP MNL	15	561987	561986
C 305					
C 306					
C 307					
C 308					
C 309					
C 310	LH CONSOLE SW – LUG. DOOR LOCK	EATON	12		562763
C 311	RH SWITCH PANEL – HOTESS CHIME	EATON	12		562763
C 312	ENGINE DDEC - ACCESSORIES	PED WP	3	561781	561782
C 312	RH SWITCH PANEL – READING LAMP	EATON	12		562763
C 313					
C 313	RH SWITCH PANEL – INTERIOR LTS	EATON	12		562763
C 314	KNEELING PANEL – PRESS SW.	PED WP	2	561566	561690
C 314	RH SWITCH PANEL – INTERIOR LTS	EATON	12		562763
C 315	LH SWITCH PANEL – LH SUN VISOR SW.	EATON	12		562763
C 316	INTO HORN BOX – KNEELING BUZZER	DEUTSCH	2	562486	562485
C 317	LH SWITCH PANEL – RH SUN VISOR SW.	EATON	12		562763
C 318	LH CONSOLE SW – DR'S WINDOW SW.	EATON	12		562763
C 319	ENGINE DDEC - ECM POWER	PED	4	561610	561611
C 320	RT SWITCH PANEL – DRIVER'S LTS SW.	EATON	12		562763
C 321	UNDER DASH RH - KEYLESS MODULE	AMP COM	26		562676
C 322	UNDER DASH RH - KEYLESS MODULE	AMP COM	22		562675
C 323	DRIVER'S WINDOW MOTOR	PED	2		561848
C 324	LH SWITCH PANEL – UPPER FAN DEFROST	EATON	12		562763
C 325	LH SWITCH PANEL – KNEELING	EATON	12		562763
C 326					
C 327					
C 328	RR ROOF – GALLEY LAMP		2		
C 329					
C 330					
C 331					
C 332					
C 333					
C 334					
C 335					
C 336					
C 337					
C 338					
C 339	KNEELING PANEL – HI BUOY SOL. VALVE	PNEUMAC	3		641385
C 340	FR JCT BOX – FIRE PIEZO ALARM	AMP MNL	2	560900	560898
C 341	LH SWITCH PANEL – HEAT MIRROR SW.	EATON	12		562763
C 342					
C 343	LH SWITCH PANEL – HEAD LAMP SW.	EATON	12		562763
C 344	LH SWITCH PANEL – HAZARD LT SW.	EATON	12		562763
C 345	LH SWITCH PANEL – FOG LT SW.	EATON	12		562763
C 346					
C 347					
C 348	INSTR. PANEL CENT. – RACOR MODULE	MOLEX	6	562070	562069
C 349					
C 350					
C 351					
C 352					
C 353					
C 354					
C 355					
C 356					
C 357					
C 358					
C 359	RH SWITCH PANEL – ENT. DOOR WIND. SW.	EATON	12		562763
C 360	ENTRACE WINDOW MOTOR	PED	2		561848
C 361					
C 362					
C 363					
C 364	FRONT ROOF - ELECTRICAL DEST. SIGN	AMP MNL	3	561667	561550

CONNECTORS CODE

NO	LOCATION	TYPE	CAVITY	#PIN HOUSING	#SOCKET HOUSING
C 365					
C 366					
C 367					
C 368	FRONT ROOF – ELECTRICAL DEST. SIGN	AMP MNL	3	561667	561550
C 369	FRONT ROOF – ELECTRICAL DEST. SIGN	TORRIX	5	562110	
C 370	FRONT ROOF – ELECTRICAL DEST. SIGN	AMP MNL	2	560900	560858
C 371	FRONT ROOF – ELECTRICAL DEST. SIGN	AMP MNL	3	561667	561550
C 372	FRONT ROOF – ELECTRICAL DEST. SIGN	MOLEX	4	561477	561476
C 373					
C 374					
C 375					
C 376					
C 377	LH SWITCH PANEL – STOP ENGINE OVERIDE	EATON	12		562763
C 378					
C 379	LUGGAGE COMPT. – WINDOW AJAR SW.	MOLEX	4	561477	561476
C 380					
C 381	UNDER DASH PANEL – ANTI THILED	AMP MNL	2	561248	561247
C 382	ENGINE GENERATOR (1)	PED WP	1	561605	561577
C 383	ENGINE COMPT – VOLTAGE REGULATOR	PED WP	1	561605	561577
C 384					
C 385	BATT. COMPT. – BJB INTERFACE	AMP MNL	12	561735	561736
C 386	LH SWITCH PANEL – W.C.LIFT	EATON	12		562763
C 387	EVAPORATOR COMPT. - BY–PASS VALVE	PED WP	2	561566	561690
C 387	BATTERY COMPT. – WCL ACCES.	AMP CPC	16	561639	561640
C 388	LUGG. COMPT.(4) – WCL DOOR ACCESS.	AMP MNL	12	561735	561736
C 389	EVAPORATOR COMPT. – WATER PUMP	PED WP	2	561566	561690
C 390	EVAPORATOR COMPT. – A/C JCT. BOX	DEUTSCH	24	562280	562283
C 391	CONDENSER COMPT. A/C PRESS SW 2 SP	PED WP	2	561566	561690
C 392					
C 393					
C 394	UNDER DASH - B/U MONITOR	AMP MNL	4	560851	560852
C 395	UNDER DASH - B/U MONITOR	CLARION	4		990335
C 396	PARCEL RACK – SPEAKER FEEDING	MOLEX	4	562507	562503
C 397					
C 398					
C 399					
C 400	ENGINE COMPT. – BLOCK HEATER	PED WP	3	561781	561782
C 401					
C 402					
C 403	GALLEY – REFRIGERATOR		2		
C 404	GALLEY – LAMP SWITCH		2		
C 405	INVERTER SIGNAL	AMP MNL	2	561248	561247
C 406					
C 407					
C 408					
C 409					
C 410					
C 411					
C 412					
C 413					
C 414					
C 415					
C 416					
C 417					
C 418					
C 419	FR JCT BOX – RET/JAKE SELECTION	AMP MNL	3	561667	561550
C 420					
C 421	ENGINE COMPT. - WEBASTO	AMP FF	2	562473	562474
C 422	ENGINE COMPT. - WEBASTO	PED	2	562644	561597
C 423					
C 424	UNDER DASH – AUDIBLE FLASHER	AMP MNL	3	561667	561550
C 425					
C 426	ENGINE S60 RAD. FAN CLUTCH	PED WP	3	561781	561782
C 427					
C 428	RH SW PANEL – DASH LTS RHEOSTAT	AMP MNL	3	561667	561550

NO	LOCATION	TYPE	CAVITY	#PIN HOUSING	#SOCKET HOUSING
C 429					
C 430	LH CONSOLE – PRE-HEAT TIMER	AMP FF	8	561188	562363
C 431	LH CONSOLE – PRE-HEAT TIMER		1		560488
C 432	HAT RACK CUT-OFF SPEAKERS	EATON	12		562763
C 433	HAT RACK CUT-OFF SPEAKERS	EATON	12		562763
C 434	HAT RACK CUT-OFF SPEAKERS	EATON	12		562763
C 435	HAT RACK CUT-OFF MONITORS	EATON	12		562763
C 436	HAT RACK CUT-OFF MONITORS	EATON	12		562763
C 437	HAT RACK CUT-OFF MONITORS	EATON	12		562763
C 438					
C 439					
C 440					
C 441					
C 442					
C 443					
C 444					
C 445					
C 446					
C 447					
C 448					
C 449					
C 450	S.S. PANEL - FEEDING	MOLEX	4	562507	562503
C 451	S.S. PANEL - FEEDING	MOLEX	2	562550	562549
C 452	UNDER DASH – S.S. ACC. SIGNAL	MOLEX	2	562550	562549
C 453	S. S. PANEL – VCR FEEDING	PED WP	2	561566	561690
C 454	S. S. PANEL – VCR FEEDING	PED WP	2	561566	561690
C 455	PARCEL RACK – WIRELESS MICROPHONE	MOLEX	6		562464
C 456	WORLD TRANS. - RETARDER ACCUM.	PED MP	2		562427
C 457	WORLD TRANS. - MAIN CONNECTOR	DEUTSCH	31	562572	562536
C 458	WORLD TRANS. - TURBINE SP. SENS.	PED MP	2		562426
C 459	WORLD TRANS. - ENGINE SP. SENS.	PED MP	2		562426
C 460	WORLD TRANS. - SPEED SENSOR	ITT	2		562541
C 461	WORLD TRANS. - RETARDER TEMP.	PED MP	2		562856
C 462	WORLD TRANS. - RETARDER SOL. "K"	PED MP	2		562426
C 463	WORLD TRANS. - SENSOR CONN.	DEUTSCH	16	562570	562571
C 464	RR JCT BOX - DDL CONN	DEUTSCH	6		565360
C 465	LH CONSOLE - SHIFTER SELECTOR	PED	20		562825
C 466	FR SERVICE CPT - RESIS. MOD.	PED WP	3		562428
C 467	FR SERVICE CPT - RESIS. MOD.	PED WP	3		562428
C 468	STEERING COLUMN – RET. HAND LEVER	AMP FF	8	561188	562363
C 469	FR SERVICE COMPT. – RESIS. MOD.	AMP FF	8	561188	562363
C 470					
C 471					
C 472	FR SERVICE CPT – SILENT 1000 OR EATON	PED WP	2	561566	561690
C 473					
C 474	DRIVER'S TEMP SENSOR	AMP MNL	2	561248	561247
C 475	FR SERVICE CPT - SPEED SIGN. CONNECT.	DEUTSCH	6	562583	562581
C 475M	FR SERVICE CPT – SPEED SIGN. W. TR.	DEUTSCH	6	562583	562581
C 475W	FR SERVICE CPT – SPEED SIGN. W. TR.	DEUTSCH	6	562583	562581
C 476					
C 477					
C 478	FRONT ROOF – ELECTRONIC DEST. SIGN	AMP CPC	9	561636	561637
C 479	UNDER DASH – HVAC DASH MODULE	MOLEX	3		562783
C 480	UNDER DASH RH – DR'S FAN SPEED CTR	PED WP	4	561889	561890
C 481	UNDER DASH RH – DR'S FAN SPEED CTR	PED WP	3	561781	561782
C 482					
C 483	FR SERVICE CPT – ELECTRICAL SEAT	PED	2	562237	
C 484	UNDER DASH LH – FOOT DAMPER MOTOR	PED	2		562076
C 485	UNDER DASH LH – DASH & DEFR. DAMP. M.	AMP MNL	3	561667	561558
C 486	WCL ROOF DOOR – DOOR LT.	LEECRAFT	2	------	562803
C 487	S.S PANEL – AUDIO IN AMPLI	MOLEX	4	------	563071
C 488	S.S PANEL – AMPLI SIGNAL	MOLEX	8	------	562465
C 489	S.S PANEL – SPEAKER OUTLET	MOLEX	6	------	562464
C 490					
C 491					

CONNECTORS CODE

NO	LOCATION	TYPE	CAVITY	#PIN HOUSING	#SOCKET HOUSING
C 492					
C 493					
C 494					
C 495					
C 496					
C 497					
C 498					
C 499					
C 500	FR JCT PANEL - PRODRIVER	MOLEX	6	562070	562069
C 501					
C 502	LH DASH PANEL – PRE- HEAT SW.	EATON	12		562763
C 503	LH CONSOLE-PR0HEAT TIMER	PED MP	6	------	562878
C 504	LH CONSOLE -WEBASTO TIMER	AMP	8	------	562852
C 505	LH CONSOLE -ESPAR TIMER	AMP	12	------	562681
C 506	FR JCT BOX – DIGITAL CLOCK	AMP CPC	4	561685	561687
C 507	LH HAT RACK – DIGITAL CLOCK	MOLEX	4	561477	561476
C 508	RR JCT BOX - FAN CLUTCH RETARDER	AMP MNL	6	561552	561515
C 509	EVAP. COMPT. – NOT USED	DEUTSCH	5		562566
C 515	FR JCT BOX CPT. - INTERCOM	MOLEX	4	561477	561476
C 516	FR JCT BOX CPT. - INTERCOM	MOLEX	6	562070	562069
C 517	LAVATORY WALL - INTERCOM	MOLEX	6	562070	562069
C 519A	RH UNDER DASH – ENTRANCE DOOR SOL.	PNEUMAC	3		641385
C 519B	RH UNDER DASH – ENTRANCE DOOR SOL.	PNEUMAC	3		641385
C 520	RH UNDER DASH – ENTRANCE DOOR SOL.	PNEUMAC	3		641385
C 521	RH UNDER DASH – ENTRANCE DOOR SOL.	PNEUMAC	3		641385
C 522	FR JCT BOX – DAYTIME LTS MODULE	BOSCH	5		561183
C 523	FR JCT BOX – FUSE BLOCK	PED	8	562647	562646
C 524	FR JCT BOX – FUSE BLOCK	PED	8	562647	562646
C 525	FR JCT BOX – FUSE BLOCK	PED	8	562647	562646
C 526	FR JCT BOX – FUSE BLOCK	PED	8	562647	562646
C 527	FR JCT BOX – FUSE BLOCK	PED	8	562647	562646
C 528					
C 529					
C 530	RR JCT BOX – FUSE BLOCK	PED	8	562647	562646
C 531	RR JCT BOX – FUSE BLOCK	PED	8	562647	562646
C 532	LH PARCEL RACK – A/C LIQ. SOL.	AMP MNL	2	561248	561247
C 533	RH PARCEL RACK – A/C LIQ. SOL.	AMP MNL	2	561248	561247
C 534					
C 535					
C 536					
C 537	A/C JCT BOX RESISTOR SIGN. RLY	AMP MNL	2	561248	561247
C 538	FR SERV. CPT RH – OUTSIDE TEMP. SENS	AMP MNL	2	561248	561247
C 539	HVAC DASH MODULE OUTPUT CONN.	MOLEX	24		562780
C 540	HVAC DASH MODULE INPUT CONN.	MOLEX	22		562781
C 541					
C 542					
C 543					
C 544	S.S. PANEL – AUDIO SEAT	PED WP	3	561781	561782
C 545					
C 546	FR. JCT BOX – CHARGER WIRELESS MIC.	MOLEX	2		563025
C 547					
C 548	LH DASH PANEL – T.T.LT TEST SW.	EATON	12		562763
C 549	LH DASH PANEL – ENGINE FAN OVERRIDE	EATON	12		562763
C 553	UNDER DASH – S.S. CONTROL HEAD	MOLEX	16		562559
C 554	UNDER DASH – S.S. CONTROL HEAD	MOLEX	16		562559
C 555	UNDER DASH – S.S. CONTROL HEAD	MOLEX	16		562559
C 556	UNDER DASH – RADIO FEEDING	MOLEX	2	562550	562549
C 557	UNDER DASH – RADIO FEEDING	MOLEX	9	562556	562555
C 558	FR. SERV. COMPT. – MIC. OUTLET	MOLEX	4	562507	562503
C 559					
C 560					
C 561	LH PARCEL RACK – WIRELESS MIC.	MOLEX	8		562465
C 562	LH PARCEL RACK – VCR SIGNAL	MOLEX	12		563070
C 563	FR. SERV. COMPT. – DRIVER SPEAKER	MOLEX	4	562507	562503
C 564	FR. SERV. COMPT. – MIC. OUTLET	MOLEX	4	562507	562503
C 565	FR. SERV. COMPT. – MIC. OUTLET	MOLEX	4	562507	562503
C 566	FR. SERV. COMPT. – MIC. OUTLET	MOLEX	4	562507	562503
C 567	FR. SERV. COMPT. – MIC. OUTLET	MOLEX	4	562507	562503
C 568	S.S. PANEL – SPEAKER OUTLET	CINTCH	4	562553	
C 569	S. S. PANEL – AMPLI SIGNAL	MOLEX	9	562556	562555
C 570	UNDER DASH PANEL – T.T.LT MODULE	MOLEX	6		562464
C 571	UNDER DASH PANEL – T.T.LT MODULE	MOLEX	20		562778
C 572	UNDER DASH PANEL – T.T.LT MODULE	MOLEX	18		562779
C 573	UNDER DASH PANEL – T.T.LT MODULE	MOLEX	8		562465
C 574	PARCEL RACK – INDIRECT LTS BALLAST	MOLEX			562759
C 575	RH PARCEL RACK - FFEDING	MOLEX	4	562507	562503
C 576	RH PARCEL RACK - FFEDING	AMP MNL	3	561667	561550
C 577	LH PARCEL RACK - FFEDING	AMP MNL	3	561667	561550
C 578	LH PARCEL RACK - FFEDING	MOLEX	4	562507	562503
C 579	LHPARCEL RACK-VCR POWER	MOLEX	4		563071
C 580	LH DASH PANEL – PARCEL RACK A/C SW.	EATON	12		562763
C 581	LH DASH PANEL – ELECTRICAL HORN	PED MP	2		562777
C 582					
C 583	LH DASH PANEL – MASTER KEY SW.	DEUTSCH	2	562486	562485
C 584	FR. SERVICE COMPT – HORN PNEU. VALVE	PNEUMAC	3		562848
C 585					
C 586	FR SERVICE COMPT – ACC. PNEU.VALVE	PNEUMAC	3		562848
C 587	LH PARCEL RACK DVD UNIT	MOLEX	4	563040	563071
C 588	FR SERV. COMPT. – S.S. INTERFACE	AMP CPC	37	561645	561646
C 589	FR. MIRROR LH	CONXALL	8	563163	563088
C 590	FR. MIRROR RH	CONXALL	8	563163	563088
C 591	LH CONSOLE – LH MIRROR SW.	EURAMT.	8		562749
C 592	LH CONSOLE – RH MIRROR SW.	EURAMT.	8		562749
C 594	FRONT ROOF – DRIVER'S LTS	LEEKRAFT	2	------	562803
C 595	RH DASH PANEL – ENTRANCE DOOR SW.	MOLEX	4	562507	562503
C 596	RH DASH PANEL – ENTRANCE DOOR SW.	MOLEX	4	562507	562503
C 597	LH DASH PANEL – DISPLAY SET SW.	AMP	5		562905
C 598	LH DASH PANEL – DISPLAY SET SW.	AMP	5		562905
C 599	UND. DASH – MAGN. SW CTR POS. DR'S AIR	AMP MNL	2	561248	561247
C 604	LH PARCEL RACK DVD VIDEO STABILIZER	SWITCHCRAFT	1	563074	
C 605	LH PARCEL RACK – A/C UNIT	AMP MNL	6	561552	561515
C 606	RH PARCEL RACK – A/C UNIT	AMP MNL	6	561552	561515
C 607	FR SERV. COMPT. – RADIO RECEIVER	PED WP	3	561781	561782
C 608	FR SERV. COMPT – SPEED SIGNAL (SPARE)	PED WP	2	561566	561690
C 609					
C 610					
C 611	RH PARCEL RACK READING LTS WCL	MOLEX	6	562558	562557
C 612	RH PARCEL RACK LUOR. INSTATION LTS WCL	MOLEX	4	562507	562503
C 613	RH PARCEL RACK INDIRECT LTS WCL	AMP MNL	3	561667	561550
C 614	RH PARCEL RACK INDIRECT LTS WCL	AMP MNL	3	561667	561550
C 615	LH PARCEL RACK DVD SIGN ALONG ADAPTOR	MOLEX	2	562550	562549
C 701	ZF TRANSMISSION ECU	KOSTAL	20		
C 702	SHIFT SELECTOR – LH CONSOLE	AMP	14		563338
C 712	NEUTRAL SWITCH ON ZF TRANSM. (TOP)	AMP	4		563340
C 714	OUTPUT SENSOR ON ZF TRANSM. (BOTTOM)	AMP	4		563340
C 717	FR SERV. COMPT – MAIN CONN.	AMP CPC	22	561642	561643
C 720	ENGINE COMPT – BLKHD CONNECTOR	DEUTSCH	31	563359	563358
C 721	LH CONSOLE – ZF TESTMAN DIAG. TOOLS	AMP MNL	6	563356	
C 723	ENGINE COMPT – FOR TRANSM.	DEUTSCH	3		562884
C 736	FR SERV. COMPT – ZMTEC MODULE	PACKARD	30	563053	
C 740	ABOVE DRIVE AXLE – EASY START SOL VALVE	LEONI	2		641949
C 742	REAR JCT BOX - FUSE BLOCK	AMP	8	562446	
C 745	FR SERV COMPT – THROTTLE POS. SENSOR	PED WP	3	561781	
C 760	FR SERVICE COMPT – TO J1939	DEUTSCH	3		
C 761	FR SERVICE COMPT – TO J1939	DEUTSCH	3		562884
C 762	ENGINE COMPT – TO J1939	DEUTSCH	3		562884
C 763	ENGINE COMPT – TO J1939	DEUTSCH	3		562884
C 764	ENGINE COMPT – TO J1939	DEUTSCH	3		562884
C 765	ENGINE COMPT – TO J1939	DEUTSCH	3		562884
C 766	ENGINE COMPT – TO J1939	DEUTSCH	3		562884

CONNECTORS CODE

NO	LOCATION	TYPE	CAVITY	#PIN HOUSING	#SOCKET HOUSING
CS	FR SERVICE CPT - ECU WOLRD TR.	PED MP	32		562817
CT	FR SERVICE CPT - ECU WORLD TR.	PED MP	32		562824
CTCI	ENGINE COMPT. – TURBO TEMP.	FCI	2		563404
CV	FR SERVICE CPT - ECU WORLD TR.	PED MP	32		562823
CX	CLUSTER	JAE	5		562957
CX 1	FR SERVICE CPT - ECU ABS	AMP JN	15		563200
CX 2	FR SERVICE CPT - ECU ABS	AMP JN	18		563201
CY	CLUSTER	JAE	30		562765
CW X1	ENGINE COMPT. – WATER HEATER	AMP	7	563134	563135
CW X3	ENGINE COMPT. – WATER HEATER	AMP	7	563134	563135
LX	CLUSTER	JAE	22		562766
LY	CLUSTER	JAE	30		562767
RX	CLUSTER	JAE	30		562767
SW 42	LAST LUGG. CPT. -WCL REMOTE	AMP CPC	9	561636	561637
WEB 1	ENGINE COMPT. - WEBASTO	AMP FF	2	562473	562474
WEB 2	ENGINE COMPT. - WEBASTO	AMP FF	2	562643	
ZF 1	FR JCT BOX – STEERING E.C.U.	HELLA	9		562929
CM 1	LH DR'S ROOF-MONITOR CUT OFF OPTION	PED WP	3	561781	561782
CM 2	LH DR'S ROOF-MONITOR CUT OFF OPTION	PED WP	3	561781	561782
CM 3	LH DR'S ROOF-MONITOR CUT OFF OPTION	PED WP	3	561781	561782
CM 4	LH DR'S ROOF-MONITOR CUT OFF OPTION	PED WP	3	561781	561782
CM 5	LH DR'S ROOF-MONITOR CUT OFF OPTION	PED WP	3	561781	561782
CM 1A	LH DR'S ROOF-MONITOR CUT OFF OPTION	PED WP	3	561781	561782
CM 2A	LH DR'S ROOF-MONITOR CUT OFF OPTION	PED WP	3	561781	561782
CM 3A	LH DR'S ROOF-MONITOR CUT OFF OPTION	PED WP	3	561781	561782
CM 4A	LH DR'S ROOF-MONITOR CUT OFF OPTION	PED WP	3	561781	561782
CM 5A	LH DR'S ROOF-MONITOR CUT OFF OPTION	PED WP	3	561781	561782
L85	REAR AXELS	PED MP	2	-	562251

NO	LOCATION	TYPE	CAVITY	#PIN HOUSING	#SOCKET HOUSING

DIODES NUMBER CODE

No.	PAGE	AMP	#PREV.	LOCATION	FUNCTION
D 1	9.2	3A	561740	FR JCT BOX	KNEELING WARNING FLASHER
D 2	15.3	3A	063849	FR JCT BOX	WATER PUMP RRE-HEAT SIGN
D 3	15.3	3A	063849	FR JCT BOX	WATER PUMP
D 4	9.2	3A	561740	FR JCT BOX	WARNING HAZARD -RH
D 5	9.2	3A	561740	FR JCT BOX	WARNING HAZARD -LH
D 6					
D 7					
D 8					
D 9					
D 10	18.1	3A	561740	FR SERV. COMPT.	KNEELING SYSTEM
D 11					
D 12	18.1	3A	561740	FR SERV. COMPT.	KNEELING SYSTEM
D 12	25.1	3A	561740	FRONT ROOF	ELECTRICAL DEST. SIGN
D 13	18.1	3A	561740	FR SERV. COMPT.	KNEELING SYSTEM
D 13	25.1	3A	561740	FRONT ROOF	ELECTRICAL DEST. SIGN
D 14	18.1	3A	561740	FR SERV. COMPT.	KNEELING SYSTEM
D 15					
D 16	9.1	3A	561740	FR JCT BOX	DAYTIME RUNNING LTS
D 17	9.2	3A	561740	FR JCT BOX	TURN SIGNAL LT-LH
D 18	9.2	3A	561740	FR JCT BOX	TURN SIGNAL LT-RH
D 19	9.1	3A	561740	FR JCT BOX	DAYTIME RUNNING LTS
D 20	9.1	3A	561740	FR JCT BOX	DAYTIME RUNNING LTS
D 21	9.2	3A	561740	UNDER DASH	AUDIBLE FLASHER RLY LH
D 22	9.2	3A	561740	UNDER DASH	AUDIBLE FLASHER RLY RH
D 23					
D 24	8.1	3A	561740	RR JCT BOX	FAN CLUTCH RADIATOR
D 25	8.1	3A	561740	RR JCT BOX	FAN CLUTCH RADIATOR
D 26					
D 27					
D 27	9.3	3A	561740	RR JCT BOX	AUX LTS-TAIL
D 28	9.3	3A	561740	RR JCT BOX	AUX LTS-STOP
D 29					
D 30	4.1	3A	561740	FR JCT BOX	MASTER KEY SW. CUT-OFF
D 31	4.1	3A	561740	FR JCT BOX	MASTER KEY SW. CUT-OFF
D 32	9.2	3A	561740	FR JCT BOX	HAZARD MASTER RLY CUT OUT
D 33					
D 34	15.3	3A	561740	FR JCT BOX	A/C WATER VALVE
D 35	15.3	3A	561740	FR JCT BOX	A/C WATER VALVE
D 36	15.2	3A	561740	EVAP. CPT.	BY-PASS VALVE
D 37	6.1	3A	561740	FR JCT BOX	NEUTRAL SIGNAL
D 38	6.1	3A	561740	FR JCT BOX	NEUTRAL SIGNAL
D 39	6.1	3A	561740	FR JCT BOX	NEUTRAL SIGNAL
D 40					
D 41					
D 42					
D 43					
D 44					
D 45					
D 46	9.3	3A	561740	FR JCT BOX	PARKING BRAKE ACTIVATES STOP LTS
D 47					
D 48					
D 49					
D 50	29.1	3A	561740	LAST LUGG. COMPT.	WCL DOOR AJAR SIGNAL TOP LT
D 51	29.1	3A	561740	LAST LUGG. COMPT.	WCL DOOR AJAR SIGNAL TOP LT
D 52					
D 53					
D 54					
D 55	29.1	3A	561740	RR JCT BOX	WCL SHIFTER INHIBIT SIGNAL

No.	PAGE	AMP	#PREV.	LOCATION	FUNCTION
D 56	9.3	3A	561740	RR JCT BOX	PARKING ACTIVE STOP LTS
D 57					
D 58	18.1	3A	561740	FRONT SERV. COMPT.	KNEELING SYSTEM
D 59					
D 60	15.2	3A	561740	RR JCT BOX	A/C COMPR. CLUTCH
D 61	15.1	3A	561740	RR JCT BOX	A/C COMPR. AUX.
D 62					
D 63					
D 64					
D 65					
D 66					
D 67					
D 68					
D 69					
D 70	18.1	3A	561740	FRONT SERV. COMPT.	LOW BUOY SYSTEM
D 71	18.1	3A	561740	FRONT SERV. COMPT.	LOW BUOY SYSTEM
D 72	18.1	3A	561740	FRONT SERV. COMPT.	LOW BUOY SYSTEM
D 73	18.1	3A	561740	FRONT SERV. COMPT.	PARKING BRAKE WCL
D 74					
D 75	4.1	3A	561740	BATT. COMPT.	STARTER RELAY SUPPRESSOR
D 76					
D 77					
D 78	14.1	3A	561740	LH CONSOLE	PRE-HEATER TIMER
D 79	14.1	3A	561740	LH CONSOLE	PRE-HEATER TIMER
D 80	9.3	3A	561740	RR JCT BOX	CYCLOP LTS RELAY R 80
D 81	18.1	3A	561740	FRONT SERV. COMPT.	KNEELING SYSTEM
D 82					
D 83	8.1	3A	561740	RR JCT BOX	RAD. FAN CLUTCH W. A/C OR RETARDER
D 84					
D 85					
D 86	24.1	3A	561740	RH UNDER DASH	ENTRANCE DOOR
D 87	24.1	3A	561740	RH UNDER DASH	ENTRANCE DOOR
D 88	24.1	3A	561740	RH UNDER DASH	ENTRANCE DOOR
D 89	24.1	3A	561740	RH UNDER DASH	ENTRANCE DOOR
D 90	24.1	3A	561740	RH UNDER DASH	ENTRANCE DOOR
D 91	24.1	3A	561740	RH UNDER DASH	ENTRANCE DOOR

DIODES NUMBER CODE

No.	PAGE	AMP	#PREV.	LOCATION	FUNCTION
D 1	9.2	3A	561740	FR JCT BOX	KNEELING WARNING FLASHER
D 2	15.3	3A	063849	FR JCT BOX	WATER PUMP RRE-HEAT SIGN
D 3	15.3	3A	063849	FR JCT BOX	WATER PUMP
D 4	9.2	3A	561740	FR JCT BOX	WARNING HAZARD -RH
D 5	9.2	3A	561740	FR JCT BOX	WARNING HAZARD -LH
D 6					
D 7					
D 8					
D 9					
D 10	18.1	3A	561740	FR SERV. COMPT.	KNEELING SYSTEM
D 11					
D 12	18.1	3A	561740	FR SERV. COMPT.	KNEELING SYSTEM
D 12	25.1	3A	561740	FRONT ROOF	ELECTRICAL DEST. SIGN
D 13	18.1	3A	561740	FR SERV. COMPT.	KNEELING SYSTEM
D 13	25.1	3A	561740	FRONT ROOF	ELECTRICAL DEST. SIGN
D 14	18.1	3A	561740	FR SERV. COMPT.	KNEELING SYSTEM
D 15					
D 16	9.1	3A	561740	FR JCT BOX	DAYTIME RUNNING LTS
D 17	9.2	3A	561740	FR JCT BOX	TURN SIGNAL LT-LH
D 18	9.2	3A	561740	FR JCT BOX	TURN SIGNAL LT-RH
D 19	9.1	3A	561740	FR JCT BOX	DAYTIME RUNNING LTS
D 20	9.1	3A	561740	FR JCT BOX	DAYTIME RUNNING LTS
D 21	9.2	3A	561740	UNDER DASH	AUDIBLE FLASHER RLY LH
D 22	9.2	3A	561740	UNDER DASH	AUDIBLE FLASHER RLY RH
D 23					
D 24	8.1	3A	561740	RR JCT BOX	FAN CLUTCH RADIATOR
D 25	8.1	3A	561740	RR JCT BOX	FAN CLUTCH RADIATOR
D 26					
D 27					
D 27	9.3	3A	561740	RR JCT BOX	AUX LTS-TAIL
D 28	9.3	3A	561740	RR JCT BOX	AUX LTS-STOP
D 29					
D 30	4.1	3A	561740	FR JCT BOX	MASTER KEY SW. CUT-OFF
D 31	4.1	3A	561740	FR JCT BOX	MASTER KEY SW. CUT-OFF
D 32	9.2	3A	561740	FR JCT BOX	HAZARD MASTER RLY CUT OUT
D 33					
D 34	15.3	3A	561740	FR JCT BOX	A/C WATER VALVE
D 35	15.3	3A	561740	FR JCT BOX	A/C WATER VALVE
D 36	15.2	3A	561740	EVAP. CPT.	BY-PASS VALVE
D 37	6.1	3A	561740	FR JCT BOX	NEUTRAL SIGNAL
D 38	6.1	3A	561740	FR JCT BOX	NEUTRAL SIGNAL
D 39	6.1	3A	561740	FR JCT BOX	NEUTRAL SIGNAL
D 40					
D 41					
D 42					
D 43					
D 44					
D 45					
D 46	9.3	3A	561740	FR JCT BOX	PARKING BRAKE ACTIVATES STOP LTS
D 47					
D 48					
D 49					
D 50	29.1	3A	561740	LAST LUGG. COMPT.	WCL DOOR AJAR SIGNAL TOP LT
D 51	29.1	3A	561740	LAST LUGG. COMPT.	WCL DOOR AJAR SIGNAL TOP LT
D 52					
D 53					
D 54					
D 55	29.1	3A	561740	RR JCT BOX	WCL SHIFTER INHIBIT SIGNAL

No.	PAGE	AMP	#PREV.	LOCATION	FUNCTION
D 56	9.3	3A	561740	RR JCT BOX	PARKING ACTIVE STOP LTS
D 57					
D 58	18.1	3A	561740	FRONT SERV. COMPT.	KNEELING SYSTEM
D 59					
D 60	15.2	3A	561740	RR JCT BOX	A/C COMPR. CLUTCH
D 61	15.1	3A	561740	RR JCT BOX	A/C COMPR. AUX.
D 62					
D 63					
D 64					
D 65					
D 66					
D 67					
D 68					
D 69					
D 70	18.1	3A	561740	FRONT SERV. COMPT.	LOW BUOY SYSTEM
D 71	18.1	3A	561740	FRONT SERV. COMPT.	LOW BUOY SYSTEM
D 72	18.1	3A	561740	FRONT SERV. COMPT.	LOW BUOY SYSTEM
D 73	18.1	3A	561740	FRONT SERV. COMPT.	PARKING BRAKE WCL
D 74					
D 75	4.1	3A	561740	BATT. COMPT.	STARTER RELAY SUPPRESSOR
D 76					
D 77					
D 78	14.1	3A	561740	LH CONSOLE	PRE-HEATER TIMER
D 79	14.1	3A	561740	LH CONSOLE	PRE-HEATER TIMER
D 80	9.3	3A	561740	RR JCT BOX	CYCLOP LTS RELAY R 80
D 81	18.1	3A	561740	FRONT SERV. COMPT.	KNEELING SYSTEM
D 82					
D 83	8.1	3A	561740	RR JCT BOX	RAD. FAN CLUTCH W. A/C OR RETARDER
D 84					
D 85					
D 86	24.1	3A	561740	RH UNDER DASH	ENTRANCE DOOR
D 87	24.1	3A	561740	RH UNDER DASH	ENTRANCE DOOR
D 88	24.1	3A	561740	RH UNDER DASH	ENTRANCE DOOR
D 89	24.1	3A	561740	RH UNDER DASH	ENTRANCE DOOR
D 90	24.1	3A	561740	RH UNDER DASH	ENTRANCE DOOR
D 91	24.1	3A	561740	RH UNDER DASH	ENTRANCE DOOR
D 92	6.3	3A	561740	FRONT SERV. COMPT.	ZF TRANSMISSION
D 93	6.3	3A	561740	FRONT SERV. COMPT.	ZF TRANSMISSION

RELAYS NUMBER CODE

No.	PAGE	COIL V	#PREV.	LOCATION	FUNCTION
R 1	1.1	24V	561991	FR JCT BOX	IGNITION (24) FR
R 2					
R 3					
R 4	4.1	24V	560407	RR JCT BOX	STARTING MOTOR
R 5	5.1	24V	563332	FR JCT BOX	CRUISE CTR BRAKE CUT-OFF
R 6					
R 7	5.1	24V	563332	FR JCT BOX	DDEC FAST IDLE SIGNAL
R 8					
R 9	9.3	24V	563332	RR JCT BOX	BACK-UP LTS
R 10					
R 11	6.1	24V	563332	FR JCT BOX	TRANS. INHIBIT
R 12	7.2	12V	563337	FR JCT BOX	ELECTRICAL HORNS
R 13	9.3	24V	563332	FR JCT BOX	FOG LTS-12V
R 14	9.1	24V	563332	FR JCT BOX	BLINKER
R 15	15.4	24V	561991	FR JCT BOX	UPPER FAN DEFROST
R 16	9.1	24V	563332	FR JCT BOX	FRONT CLEARANCE LIGHT
R 17	9.1	24V	563332	RR JCT BOX	TAIL.LICENCE. RR LTS
R 18	9.1	24V	563332	FR JCT BOX	DAYTIME RUN LTS-CUT-OUT
R 19	9.5	24V	563332	FR JCT BOX	HI-BEAM
R 20	9.5	24V	563332	FR JCT BOX	LO-BEAM
R 21	9.2	24V	563332	FR JCT BOX	LH DIRECTIONNAL LTS
R 22					
R 23	9.2	24V	563332	FR JCT BOX	RH DIRECTIONNAL LTS
R 24	9.2sp1	24v	563332	FR JCT BOX	RH CORNERING LTS
R 25	9.2sp1	24v	563332	FR JCT BOX	LH CORNERING LTS
R 26	9.3	24V	563332	RR JCT BOX	STOP LTS
R 27	11.3	24v	563332	FR JCT BOX	AISLE LTS
R 28	11.2	24V	563332	FR JCT BOX	DASH LTS RHEOSTAT
R 29	15.3	24V	561005	A/C JCT BOX	CONDENSER FAN
R 30	15.3	24V	561005	A/C JCT BOX	EVAPORATOR FAN
R 31	15.3	24V	563332	FR JCT BOX	WATER VALVE & BYPASS
R 32	1.1	24V	561991	POWER JCT BOX	12 V. CUT-OUT REAR
R 33					
R 34	15.1	24V	563332	RR JCT BOX	A/C RAD. FAN CLUTCH (PARCEL RACK)
R 35	15.3	24V	563332	FR JCT BOX	WATER PUMP
R 36	15.1	24V	563332	RR JCT BOX	A/C COMPR. CLUTCH (PARCEL RACK)
R 37	11.4	24V	563332	RR JCT BOX	READING LAMP
R 38	11.4	24V	563332	RR JCT BOX	READING LAMP
R 39	11.5	24V	563332	RR JCT BOX	24 V FLUORESCENT
R 40	15.3	24V	561005	A/C JCT BOX	CONDENSER FAN
R 41	15.3	24V	561005	A/C JCT BOX	CONDENSER FAN
R 42	1.1	24V	561991	POWER JCT BOX	12 V. CUT-OUT FRONT
R 43					
R 44	1.1	24V	561991	POWER JCT BOX	12 V. CUT-OUT FRONT
R 45	11.4	24V	563332	RR JCT BOX	INDIRECT LTS
R 46					
R 47	27.1	24V	563332	GALLEY PANEL	COFFEE CONTAINERS
R 48	27.1	24V	563332	GALLEY PANEL	COFFEEMAKER
R 49	22.1	12V	563337	FR JCT BOX	12V ABS – ENGINE BRAKE
R 50					
R 51	11.2	24V	563332	FR JCT BOX	DRIVER'S LTS KEYLERSS ALARM
R 52	22.1	12V	563337	FR JCT BOX	12V ABS – RETARDER
R 53	1.1	24V	561991	RR JCT BOX	IGNITION 24V RR
R 54	2.1	24V	563332	RR JCT BOX	IGNITION 12V RR
R 59	9.3sp1	24V	563332	RR JCT BOX	DOCKING LTS
R 61	15.3	24V	563332	A/C JCT BOX	EVAPORATOR FAN – SPEED RLY
R 62	5.1	24V	563332	FR JCT BOX	DDEC PARK. BRAKE SIGNAL
R 63	15.3	24V	560772	A/C JCT BOX	EVAPORATOR FAN – TIMER RLY
R 64	27.1	24V	561005	GALLEY PANEL	INVERTER CUT OFF
R 65	28.4	24V	OPTION	HAT RACK	SCENIC VIEW CAMERA
R 66	28.3	24V	563332	S.S. PANEL	VIDEO TRIGGER
R 67	28.1	12V	563337	S.S. PANEL	RARIO TRIGGER

No.	PAGE	COIL V	#PREV.	LOCATION	FUNCTION
R 68	28.1	24V	561991	S.S. PANEL	S.S. ACC. SWITCH
R 69	12.1	12V	563337	RR JCT BOX	LUGG DOOR LOCK
R 70	12.1	12V	563337	RR JCT BOX	LUGG DOOR UNLOCK
R 71	12.1	24V	563332	FR JCT BOX	LUGG DOOR UNLOCK TT LT
R 72	29.1	24V	563332	POWER JCT BOX	WCL-SYTEME ON
R 73	29.1	24V	563332	POWER JCT BOX	WCL-DOOR OPEN SW. SIGNAL
R 74	12.1	12V	563337	RR JCT BOX	LUGG DOOR LOCK
R 75	12.1	12V	563337	RR JCT BOX	LUGG DOOR UNLOCK
R 76	9.3	24V	563332	RR JCT BOX	STOP LTS-ENGINE BRK & RETARDER SYST.
R 77	9.2	12V	563337	UNDER DASH	AUDIBLE FLASHER RLY
R 78	8.1	24V	563332	RR JCT BOX	DDEC FAN CONTROL SPEED#1
R 79	8.1	24V	563332	RR JCT BOX	DDEC FAN CONTROL SPEED#2
R 79	27.1	24V	563332	GALLEY PANEL	REFREGIRATOR
R 80	9.3	24V	563332	RR JCT BOX	CYCLOP LTS WITH BRAKE
R 81	26.1	24V	563332	LAVATORY SW.	LAVATORY TIMER PUMP
R 82	21.1	24V	563332	FR JCT BOX	RETARDER SYSTEM
R 83	14.4SP	24V	563332	RR JCT BOX	WATER PUMP RLY – PROHEAT OPTIONAL
R 84	15.2	24V	563332	RR JCT BOX	HVAC ON-OFF SIGNAL (FULL AIR)
R 85	15.2	24V	563332	FR JCT BOX	HVAC DR'S REC. DAMPER CYL. L.H.
R 86	15.2	24V	563332	RR JCT BOX	HVAC MODE COOL/HEAT
R 86	18.1	24V	563332	FR SERV. COMPT.	KNEELING SYSTEM
R 87	21.1	24V	563332	FR JCT BOX	ENGINE BRAKE PRESELECT #1
R 87A	18.1	24V	563332	FR SERV. COMPT.	KNEELING SYSTEM
R 88	4.1	24V	563332	FR JCT BOX	LATCHING 24V CUT OUT SW.
R 88	18.1	24V	563332	FR SERV. COMPT.	KNEELING SYSTEM
R 89	15.3	24V	563332	FR JCT BOX	WATER PUMP RELAY
R 90	18.1	24V	563332	FR JCT BOX	KNEELING CANCELLATION
R 94	9.3	24V	563332	RR JCT BOX	AUX READ LAMP-LH
R 95	9.3	24V	563332	RR JCT BOX	AUX READ LAMP-RH
R 96	29.1	24V	563332	POWER JCT BOX	WCL – DOOR AJAR SIGNAL
R 97	29.1	24V	563332	POWER JCT BOX	WCL – DOOR AJAR PARKING BRAKE
R 98	29.1	24V	563332	POWER JCT BOX	WCL – ALTERNATOR SIGNAL
R 99	8.1	24V	563332	RR JCT BOX	RADIATOR FAN CLUTCH
R 103	15.1	24V	563332	RR JCT BOX	PARCEL RACK VENTILATION
R 104	15.1	24V	563332	RR JCT BOX	PARCEL RACK VENTILATION
R 105	15.1	24V	563332	RR JCT BOX	PARCEL RACK VENTILATION
R 107					
R 109	5.1	24V	563332	RR JCT BOX	THROTTLE INHIBIT WITH WCL
R 111	4.1SP2	24V	563332	POWER JCT BOX	HEATER RUN. WITH CHARGER 110V ACTIVED
R 112	4.1SP2	24V	563332	POWER JCT BOX	HEATER RUN. WITH CHARGER 110V ACTIVED
R F1	8.1	24V	563332	RR JCT BOX	FAN CLUTCH SP#1 OPT. RETARDER
R F2	8.1	24V	563332	RR JCT BOX	FAN CLUTCH SP#2 OPT. RETARDER
R F3	8.1	24V	560772	RR JCT BOX	TIME DELAY FAN CLUTCH
R H3	15.1	24V	563332	A/C JCT BOX	LUGGAGE CPT. FAN BEFORE FILTER
R H4	15.1SP	24V	563332	A/C JCT BOX	LUGGAGE CPT. FAN AFTER FLITER
R LFL	11.5SP	24V	563332	RR JCT BOX	LAST FLUOR. OPT.
R LA	24.1	24V	563332	RH UNDER DASH	ENTRANCE DOOR SYSTEM
R LO	24.1	24V	563332	RH UNDER DASH	ENTRANCE DOOR SYSTEM
R LT	24.1	24V	563332	RH UNDER DASH	ENTRANCE DOOR SYSTEM
R LV	24.1	24V	563332	RH UNDER DASH	ENTRANCE DOOR SYSTEM
R RL1	11.4SP	24V	563332	RR JCT BOX	READING LAMP OPT.
R RL2	11.4SP	24V	563332	RR JCT BOX	READING LAMP OPT.
Z F1	6.1	12V	563033	FR JCT BOX	ZF STEERING GEAR BOX - CONTROL UNIT
R SP	4.1SP3	24V	563332	FR JCT BOX	POWER SHUTDOWN OPT
R SCF	4.1SP1	24V	563332	N/D	STARTER LOCKOUT OPT
R ZF2	6.3	24V	563332	FR JCT BOX	EASY START CONTROL – ZF TRANSMISSION
R ZF3	9.3	24V	563332	RR JCT BOX	DECELERATION LIGHT – ZF TRANSMISSION
V IM1	6.1	12V	563337	FR JCT BOX	VIM WORLD TR.-OUTPUT 1 SPEED INTERLOCK
V IM2	6.1	12V	563337	FR JCT BOX	VIM WORLD TR.-OUTPUT 2 ENG. BRK DISABLE
V IM3	6.1	12V	563337	FR JCT BOX	VIM WORLD TR.-OUTPUT 3
V IM4	6.1	12V	563337	FR JCT BOX	VIM WORLD TR.-OUTPUT 4 RETARD. ON SIGNAL
V IMN	6.1	12V	563337	FR JCT BOX	VIM WORLD TR.-NEUTRAL SIGNAL
V IMR	6.1	12V	563337	FR JCT BOX	VIM WORLD TR.-B/U SIGNAL

RELAYS NUMBER CODE

No.	PAGE	COIL V	#PREV.	LOCATION	FUNCTION	No.	PAGE	COIL V	#PREV.	LOCATION	FUNCTION

RESISTORS NUMBER CODE

No.	PAGE	OHM(S)	#PREV.	LOCATION	FUNCTION
RS 1	5.1	11K	562307	FR JCT BOX	DDEC III-FAST IDLE
RS 2	5.1	3.6K	562306	FR JCT BOX	DDEC III-FAST IDLE
RS 3	9.3	1 (2)	561537	FR JCT BOX	FOG LT - RH
RS 4	9.3	1 (2)	561537	FR JCT BOX	FOG LT - LH
RS 5	22.1	620	563205	FR. SERV. COMPT.	ABS
RS 6	22.1	620	563205	FR. SERV. COMPT.	TRAILER ABS
RS 7					
RS 8					
RS 9	7.1	100	563006	UNDER DASH	DISPLAY SW. INDICATOR
RS 10	25.1	82	562108	FRONT ROOF	ELECTRICAL DEST. SIGN
RS 11	15.1	2		PARCEL RACK	A/C VENTILATION UNIT
RS 12	15.1	2		PARCEL RACK	A/C VENTILATION UNIT
RS 13	15.1	470K	560805	RR JCT BOX	A/C COMPRESSOR AUX. DELAY
RS 14					
RS 15					
RS 16					
RS 17	7.2	220	562498	FR JCT BOX	FIRE ALARM
RS 18	8.1	75K	064208	RR JCT BOX	FAN CLUTCH WITH A/C STD & OR RETARDER
RS 19	9.3	24	562903	RR JCT BOX	CYCLOPS LTS - TAIL
RS 20	17.1	1K	562470	FR SERV COMPT.	VSS SIGNAL-VOLTAGE DIVIDER
RS 21	24.1	100	563006	RH UNDER DASH	ENTRANCE DOOR OPEN SOL.
RS 22					
RS 23					
RS 24	9.1	1.5K	562908	UNDER DASH	HEAD LTS SWITCH LED
RS 25	9.3	1.5K	562908	UNDER DASH	FOG LTS SWITCH LED
RS 26					
RS 27					
RS 28					
RS 29	27.1	1.5K	562908	GALLEY	LED SWITCH – VOLTAGE DIVIDER
RS 30	27.1	1.5K	562908	GALLEY	LED SWITCH – VOLTAGE DIVIDER
RS 31	27.1	1.5K	562908	GALLEY	LED SWITCH – VOLTAGE DIVIDER
RS 32	27.1	1.5K	562908	GALLEY	LED SWITCH – VOLTAGE DIVIDER
RS 33	27.1	1.5K	562908	GALLEY	LED SWITCH – VOLTAGE DIVIDER
RS 34	27.1	1.5K	562908	GALLEY	LED SWITCH – VOLTAGE DIVIDER
RS 35	27.1	1.5K	562908	GALLEY	LED SWITCH – VOLTAGE DIVIDER
RS 36					
RS 37					
RS 38	5.2	120	562882	DDEC ECM	EATON TERMINATING RESISTOR
RS 39	6.3	120	562882	FR JCT BOX	EATON TERMINATING RESISTOR
RS 40	15.4	1.5K	562908	UNDER DASH	LED SWITCH -UPPER FAN DEFROST
RS 41	26.1	1M	065830	LAVATORY TRAP SW	FLUSH PUMP TIME DELAY
RS 63	26.1	330K	065755	EVAP. COMPT.	EVAP. MOTOR - TIME DELAY

RESISTORS NUMBER CODE

No.	PAGE	OHM(S)	#PREV.	LOCATION	FUNCTION
RS 1	5.1	11K	562307	FR JCT BOX	DDEC III-FAST IDLE
RS 2	5.1	3.6K	562306	FR JCT BOX	DDEC III-FAST IDLE
RS 3	9.3	1 (2)	561537	FR JCT BOX	FOG LT - RH
RS 4	9.3	1 (2)	561537	FR JCT BOX	FOG LT - LH
RS 5	22.1	620	563205	FR. SERV. COMPT.	ABS
RS 6	22.1	620	563205	FR. SERV. COMPT.	TRAILER ABS
RS 7					
RS 8					
RS 9	7.1	100	563006	UNDER DASH	DISPLAY SW. INDICATOR
RS 10	25.1	82	562108	FRONT ROOF	ELECTRICAL DEST. SIGN
RS 11	15.1	2		PARCEL RACK	A/C VENTILATION UNIT
RS 12	15.1	2		PARCEL RACK	A/C VENTILATION UNIT
RS 13	15.1	470K	560805	RR JCT BOX	A/C COMPRESSOR AUX. DELAY
RS 14					
RS 15					
RS 16					
RS 17	7.2	220	562498	FR JCT BOX	FIRE ALARM
RS 18	8.1	75K	064208	RR JCT BOX	FAN CLUTCH WITH A/C STD & OR RETARDER
RS 19	9.3	24	562903	RR JCT BOX	CYCLOPS LTS - TAIL
RS 20	17.1	1K	562470	FR SERV COMPT.	VSS SIGNAL-VOLTAGE DIVIDER
RS 21	24.1	100	563006	RH UNDER DASH	ENTRANCE DOOR OPEN SOL.
RS 22					
RS 23					
RS 24	9.1	1.5K	562908	UNDER DASH	HEAD LTS SWITCH LED
RS 25	9.3	1.5K	562908	UNDER DASH	FOG LTS SWITCH LED
RS 26					
RS 27					
RS 28					
RS 29	27.1	1.5K	562908	GALLEY	LED SWITCH – VOLTAGE DIVIDER
RS 30	27.1	1.5K	562908	GALLEY	LED SWITCH – VOLTAGE DIVIDER
RS 31	27.1	1.5K	562908	GALLEY	LED SWITCH – VOLTAGE DIVIDER
RS 32	27.1	1.5K	562908	GALLEY	LED SWITCH – VOLTAGE DIVIDER
RS 33	27.1	1.5K	562908	GALLEY	LED SWITCH – VOLTAGE DIVIDER
RS 34	27.1	1.5K	562908	GALLEY	LED SWITCH – VOLTAGE DIVIDER
RS 35	27.1	1.5K	562908	GALLEY	LED SWITCH – VOLTAGE DIVIDER
RS 36					
RS 37					
RS 38	5.2	120	562882	DDEC ECM	EATON TERMINATING RESISTOR
RS 39	6.3	120	562882	FR JCT BOX	EATON TERMINATING RESISTOR
RS 40	15.4	1.5K	562908	UNDER DASH	LED SWITCH -UPPER FAN DEFROST
RS 41	26.1	1M	065830	LAVATORY TRAP SW	FLUSH PUMP TIME DELAY
RS 42	9.5	0.2	066001	FR JCT BOX	HALOGEN HEAD LTS RESISTOR
RS 43	9.5	0.2	066001	FR JCT BOX	HALOGEN HEAD LTS RESISTOR
RS 63	26.1	330K	065755	EVAP. COMPT.	EVAP. MOTOR - TIME DELAY

RESISTORS NUMBER CODE

No.	PAGE	OHM(S)	#PREV.	LOCATION	FUNCTION
RS 1	5.1	11K	562307	FR JCT BOX	DDEC III-FAST IDLE
RS 2	5.1	3.6K	562306	FR JCT BOX	DDEC III-FAST IDLE
RS 3	9.3	1 (2)	561537	FR JCT BOX	FOG LT - RH
RS 4	9.3	1 (2)	561537	FR JCT BOX	FOG LT - LH
RS 5	22.1	620	563205	FR. SERV. COMPT.	ABS
RS 6	22.1	620	563205	FR. SERV. COMPT.	TRAILER ABS
RS 7					
RS 8					
RS 9	7.1	100	563006	UNDER DASH	DISPLAY SW. INDICATOR
RS 10	25.1	82	562108	FRONT ROOF	ELECTRICAL DEST. SIGN
RS 11	15.1	2		PARCEL RACK	A/C VENTILATION UNIT
RS 12	15.1	2		PARCEL RACK	A/C VENTILATION UNIT
RS 13	15.1	470K	560805	RR JCT BOX	A/C COMPRESSOR AUX. DELAY
RS 14					
RS 15					
RS 16					
RS 17	7.2	220	562498	FR JCT BOX	FIRE ALARM
RS 18	8.1	75K	064208	RR JCT BOX	FAN CLUTCH WITH A/C STD & OR RETARDER
RS 19	9.3	24	562903	RR JCT BOX	CYCLOPS LTS - TAIL
RS 20	17.1	1K	562470	FR SERV COMPT.	VSS SIGNAL-VOLTAGE DIVIDER
RS 21	24.1	100	563006	RH UNDER DASH	ENTRANCE DOOR OPEN SOL.
RS 22					
RS 23					
RS 24	9.1	1.5K	562908	UNDER DASH	HEAD LTS SWITCH LED
RS 25	9.3	1.5K	562908	UNDER DASH	FOG LTS SWITCH LED
RS 26					
RS 27					
RS 28					
RS 29	27.1	1.5K	562908	GALLEY	LED SWITCH – VOLTAGE DIVIDER
RS 30	27.1	1.5K	562908	GALLEY	LED SWITCH – VOLTAGE DIVIDER
RS 31	27.1	1.5K	562908	GALLEY	LED SWITCH – VOLTAGE DIVIDER
RS 32	27.1	1.5K	562908	GALLEY	LED SWITCH – VOLTAGE DIVIDER
RS 33	27.1	1.5K	562908	GALLEY	LED SWITCH – VOLTAGE DIVIDER
RS 34	27.1	1.5K	562908	GALLEY	LED SWITCH – VOLTAGE DIVIDER
RS 35	27.1	1.5K	562908	GALLEY	LED SWITCH – VOLTAGE DIVIDER
RS 36					
RS 37					
RS 38	5.2	120	562882	DDEC ECM	EATON TERMINATING RESISTOR
RS 39	6.3	120	562882	FR JCT BOX	EATON TERMINATING RESISTOR
RS 40	15.4	1.5K	562908	UNDER DASH	LED SWITCH -UPPER FAN DEFROST
RS 41	26.1	1M	065830	LAVATORY TRAP SW	FLUSH PUMP TIME DELAY
RS 42	9.5	0.2	066001	FR JCT BOX	HALOGEN HEAD LTS RESISTOR
RS 43	9.5	0.2	066001	FR JCT BOX	HALOGEN HEAD LTS RESISTOR
RS 44	28.3SP1	1.5K	562908	HAT RACK	LED SWITCH – VOLTAGE DIVIDER
RS 45	28.3SP1	1.5K	562908	HAT RACK	LED SWITCH – VOLTAGE DIVIDER
RS 46	28.3SP1	1.5K	562908	HAT RACK	LED SWITCH – VOLTAGE DIVIDER
RS 47	28.2	2		HAT RACK	SPEAKER LOAD RESISTOR
RS 48	28.2	2		HAT RACK	SPEAKER LOAD RESISTOR
RS 49	28.2	2		HAT RACK	SPEAKER LOAD RESISTOR
RS 50	28.2	2		HAT RACK	SPEAKER LOAD RESISTOR
RS 51	28.2	2		HAT RACK	SPEAKER LOAD RESISTOR
RS 52	28.2	2		HAT RACK	SPEAKER LOAD RESISTOR
RS 63	26.1	330K	065755	EVAP. COMPT.	EVAP. MOTOR - TIME DELAY

WIRING DIAGRAM KEYS

24-85B-16
- GAUGE
- CIRCUIT NUMBER
- CIRCUIT VOLTAGE

WIRE CROSSING

WIRE SOLDERING JOINT

SHIELDED WIRES

TWISTED WIRES

STUD TERMINAL

JUNCTION BLOCK

DUMMY

FS — FROM GROUND STUD GROUND SECTION FRONT JCT. BOX

RS — FROM GROUND STUD GROUND SECTION REAR JCT. BOX

CHASSIS GROUND

ACCESSORY CHASSIS GROUND

C23 — CONNECTOR CODE NUMBER
5 — PIN TERMINAL, CAVITY NUMBER, SOCKET TERMINAL

L.E.D.

INCANDESCENT LAMP

FLUORESCENT LAMP

D3 — CODE NUMBER
ANODE — CATHODE — DIODE/RECTIFIER

RS2 — CODE NUMBER
4.3 KΩ — OHMS
RESISTOR

CODE NUMBER — R2
COIL <85 — 86> COIL
N.O. <87 — 30> COM.
N.C. <87A
RELAY S.P.D.T.
SINGLE POLE, DOUBLE THROW
SUPPRESSOR DIODE

CODE NUMBER — R2
COIL <85 — 86> COIL
N.O. <87 — 30> COM.
RELAY S.P.S.T.
SINGLE POLE, SINGLE THROW
SUPPRESSOR DIODE

CODE NUMBER — R2
COIL <85 — 86> COIL
N.O. <87 — 30> COM.
N.C. <87A
RELAY S.P.D.T.
SINGLE POLE, DOUBLE THROW

CODE NUMBER — R2
COIL — COIL
COM. — N.O.
COM. — N.C.
BAT.
RELAY-MAGNETIC
D.P.D.T.
DOUBLE POLE, DOUBLE THROW

CODE NUMBER — R2
COIL — COIL
COM. — N.O.
BAT.
RELAY-MAGNETIC
S.P.S.T.
SINGLE POLE, SINGLE THROW

7.5 — AMPACITY
FUSE

CB23 — CIRCUIT BREAKER CODE NUMBER
10A — AMPACITY

N.C. COM. N.O. — LIMIT SWITCH SPDT

PRESSURE SWITCH N.C.

PRESSURE SWITCH N.O.

SWITCH S.P.D.T.
SINGLE POLE, DOUBLE THROW

SWITCH
MOMENTARY CONTACT

SWITCH
PUSH BUTTON

LOCK — SWITCH
MECHANICAL LOCK

M — ELECTRIC MOTOR

110V EXTERIOR
PLUG RECEPTACLE

ELECTRIC HORN

THERMOSTAT

HEATER

SOLENOID VALVE

T — THERMISTOR

BATTERY

FR. JCT BOX - JUNCTION BLOCK

RR. JCT BOX - JUNCTION BLOCK

BAT. JCT PANEL - JUNCTION BLOCK

BLK	BLACK
YEL	YELLOW
RED	RED
WH	WHITE
GRY	GREY
ORA	ORANGE
BLU	BLUE
GRN	GREEN
BRN	BROWN
PUR	PURPLE
PK	PINK

FUSES CODE

No.	PAGE	AMP.	#PREV.	LOCATION	FUNCTION
F 1	6.1	10A	562407	FR JCT BOX	WORLD TRANSM 12V BATT
F 2	6.1	10A	562407	FR JCT BOX	WORLD TRANSM 12V IGN.
F 3	7.2	20A	562605	FR JCT BOX	ELECTRICAL HORNS
F 4	7.2	5A	562259	FR JCT BOX	FIRE ALARME
F 5	8.1	7.5 A	562602	FR JCT BOX	AIR DRYER
F 6	17.1	3A	562599	FR JCT BOX	STEERING CONTROL
F 7	4.2	3A	560893	RH ENG.CPT.	STARTER ON T.T.LT.
F 8					
F 9	11.1	3A	560893	BATT. COMPT.	BATT. COMPT. LTS
F 10	9.3	15A	562604	FR JCT BOX	FOG LTS
F 11					
F 12	11.3	10	562407	FR JCT BOX	AISLE LTS
F 13	11.3	7.5	562602	FR JCT BOX	EMERGENCY LTS
F 14	11.2	15A	562604	FR JCT BOX	DRIVER'S LTS SW.
F 15	11.4	15A	562604	RR JCT BOX	READING LAMP
F 16	11.4	15A	562604	RR JCT BOX	READING LAMP
F 17	11.3	7.5	562602	RR JCT BOX	HAT RACK LTS
F 18	11.5	10A	562407	RR JCT BOX	24V FLUORESCENT
F 19	11.5	10A	562407	RR JCT BOX	24V FLUORESCENT
F 20	11.4	5A	562259	FR JCT BOX	INTERIOR LTS SWITCH
F 21	19.1	10A	562407	RR JCT BOX	FUEL PRIME PUMP
F 22	13.1	10A	562407	FR JCT BOX	POWER OUTLET DASH R.H.
F 23	19.1	15A	562604	FR JCT BOX	DRIVER'S & ENTRANCE WINDOW LIFTER
F 24	13.1	15A	562604	FR JCT BOX	CIGAR LIGHTER & POWER OUTLET L.H.CONSOL
F 25	19.1	3A	562599	FR JCT BOX	SUN VISOR
F 26	14.1	7.5A	562602	FR JCT BOX	WATER HTR TIMER
F 27	11.4	10A	562407	RR JCT BOX	INDIRECT LTS
F 28	11.4	10A	562407	RR JCT BOX	INDIRECT LTS
F 29	28.1	7A		UNDER DASH	RADIO
F 30	28.1	7.5A		UNDER DASH	RADIO
F 31	25.1	5A	562259	FR JCT BOX	DESTINATION SIGN
F 32					
F 33	18.1	5A	562259	FR JCT BOX	KNEELING SYSTEM
F 34					
F 35					
F 36					
F 37					
F 38					
F 39					
F 40	28.5	7.5A		FR JCT BOX	CB OPTION
F 41					
F 42	28.5	3A		FR JCT BOX	WIRELESS MICRO CHARGER
F 43	1.2	3A	562599	BATT. COMP.	12V SIGNAL.TO BATT. MONITOR
F 44	1.2	3A	562599	BATT. COMP.	12V SIGNAL.TO BATT. MONITOR
F 45					
F 46	9.3sp1	10A	562407	RR JCT BOX	DOCKING LTS
F 47	16.1	7.5A	562602	FR JCT BOX	RR VIEW MIRROR
F 48	9.2	3A	562599	FR JCT BOX	KNEELING WARN. IND.
F 59	6.3	10A	562407	FR JCT BOX	EATON TRANS
F 61	30.1	1A	561134	FR JCT BOX	INTERCOM
F 70	27.1	7.5A		GALLEY	RH CONTAINER
F 71	27.1	7.5A		GALLEY	LH CONTAINER
F 72	27.1	10A		GALLEY	REFRIGERATOR
F 73	27.1	35A		GALLEY	COFFEEMAKER
F 74	27.1	7.5A		GALLEY	REFRIGERATOR
F 75	9.2sp1	10A	562407	FR JCT BOX	CORNERING LTS

No.	PAGE	AMP	#PREV	LOCATION	FUNCTION
F 76	28.7	1A	562597	SOUND SYS JC BOX	DVD KARAOKE
F 77	28.7	3A	562599	SOUND SYS JC BOX	DVD KARAOKE
F 78					
F 79					
F 80					
F 81	6.3	10A	562407	FR JCT BOX	ZF RANSMISSION
F 82	6.3	10A	562407	FR JCT BOX	ZF RANSMISSION
F 83	6.3	10A	562407	FR JCT BOX	ZF RANSMISSION

FUSES CODE

No.	PAGE	AMP.	#PREV.	LOCATION	FUNCTION	No.	PAGE	AMP	#PREV	LOCATION	FUNCTION

FUSES CODE

No.	PAGE	AMP.	#PREV.	LOCATION	FUNCTION
F 1	6.1	10A	562407	FR JCT BOX	WORLD TRANSM 12V BATT
F 2	6.1	10A	562407	FR JCT BOX	WORLD TRANSM 12V IGN.
F 3	7.2	20A	562605	FR JCT BOX	ELECTRICAL HORNS
F 4	7.2	5A	562259	FR JCT BOX	FIRE ALARME
F 5					
F 6	17.1	3A	562599	FR JCT BOX	STEERING CONTROL
F 7	4.2	3A	560893	RH ENG.CPT.	STARTER ON T.T.LT.
F 8					
F 9	11.1	3A	560893	BATT. COMPT.	BATT. COMPT. LTS
F 10	9.3	15A	562604	FR JCT BOX	FOG LTS
F 11					
F 12	11.3	10	562407	FR JCT BOX	AISLE LTS
F 13	11.3	7.5	562602	FR JCT BOX	EMERGENCY LTS
F 14	11.2	15A	562604	FR JCT BOX	DRIVER'S LTS SW.
F 15	11.4	15A	562604	RR JCT BOX	READING LAMP
F 16	11.4	15A	562604	RR JCT BOX	READING LAMP
F 17	11.3	7.5	562602	RR JCT BOX	HAT RACK LTS
F 18	11.5	10A	562407	RR JCT BOX	24V FLUORESCENT
F 19	11.5	10A	562407	RR JCT BOX	24V FLUORESCENT
F 20	11.4	5A	562259	FR JCT BOX	INTERIOR LTS SWITCH
F 21	19.1	10A	562407	RR JCT BOX	FUEL PRIME PUMP
F 22	13.1	10A	562407	FR JCT BOX	POWER OUTLET DASH R.H.
F 23	19.1	15A	562604	FR JCT BOX	DRIVER'S & ENTRANCE WINDOW LIFTER
F 24	13.1	15A	562604	FR JCT BOX	CIGAR LIGHTER & POWER OUTLET L.H.CONSOL
F 25	19.1	3A	562599	FR JCT BOX	SUN VISOR
F 26	14.1	7.5A	562602	FR JCT BOX	WATER HTR TIMER
F 27	11.4	10A	562407	RR JCT BOX	INDIRECT LTS
F 28	11.4	10A	562407	RR JCT BOX	INDIRECT LTS
F 29	28.1	7A		UNDER DASH	RADIO
F 30	28.1	7.5A		UNDER DASH	RADIO
F 31	25.1	5A	562259	FR JCT BOX	DESTINATION SIGN
F 32					
F 33	18.1	5A	562259	FR JCT BOX	KNEELING SYSTEM
F 34					
F 35					
F 36					
F 37					
F 38					
F 39					
F 40	28.5	7.5A		FR JCT BOX	CB OPTION
F 41					
F 42	28.5	3A		FR JCT BOX	WIRELESS MICRO CHARGER
F 43	1.2	3A	562599	BATT. COMP.	12V SIGNAL.TO BATT. MONITOR
F 44	1.2	3A	562599	BATT. COMP.	12V SIGNAL.TO BATT. MONITOR
F 45					
F 46	9.3sp1	10A	562407	RR JCT BOX	DOCKING LTS
F 47	16.1	7.5A	562602	FR JCT BOX	RR VIEW MIRROR
F 48	9.2	3A	562599	FR JCT BOX	KNEELING WARN. IND.
F 59	6.3	10A	562407	FR JCT BOX	EATON TRANS
F 61	30.1	1A	561134	FR JCT BOX	INTERCOM
F 70	27.1	7.5A		GALLEY	RH CONTAINER
F 71	27.1	7.5A		GALLEY	LH CONTAINER
F 72	27.1	10A		GALLEY	REFRIGERATOR
F 73	27.1	35A		GALLEY	COFFEEMAKER
F 74	27.1	7.5A		GALLEY	REFRIGERATOR
F 75	9.2sp1	10A	562407	FR JCT BOX	CORNERING LTS

No.	PAGE	AMP	#PREV	LOCATION	FUNCTION
F 76	28.7	1A	562597	SOUND SYS JC BOX	DVD KARAOKE
F 77	28.7	3A	562599	SOUND SYS JC BOX	DVD KARAOKE
F 78					
F 79					
F 80					
F 81	6.3	10A	562407	FR JCT BOX	ZF TRANSMISSION
F 82	6.3	10A	562407	FR JCT BOX	ZF TRANSMISSION
F 83	6.3	10A	562407	FR JCT BOX	ZF TRANSMISSION
F 84	6.3	10A	562407	FR JCT BOX	ZF TRANSMISSION

FUSES CODE

No.	PAGE	AMP.	#PREV.	LOCATION	FUNCTION	No.	PAGE	AMP	#PREV	LOCATION	FUNCTION

FUSES CODE

No.	PAGE	AMP.	#PREV.	LOCATION	FUNCTION
F 1	6.1	10A	562407	FR JCT BOX	WORLD TRANSM 12V BATT
F 2	6.1	10A	562407	FR JCT BOX	WORLD TRANSM 12V IGN.
F 3	7.2	20A	562605	FR JCT BOX	ELECTRICAL HORNS
F 4	7.2	5A	562259	FR JCT BOX	FIRE ALARME
F 5					
F 6	17.1	3A	562599	FR JCT BOX	STEERING CONTROL
F 7S	4.2	3A	560893	RH ENG.CPT.	STARTER “ON” T.T.LT.
F 8					
F 9	11.1	3A	560893	BATT. COMPT.	BATT. COMPT. LTS
F 10	9.3	15A	562604	FR JCT BOX	FOG LTS
F 11					
F 12	11.3	10	562407	FR JCT BOX	AISLE LTS
F 13	11.3	7.5	562602	FR JCT BOX	EMERGENCY LTS
F 14	11.2	15A	562604	FR JCT BOX	DRIVER’S LTS SW.
F 15	11.4	15A	562604	RR JCT BOX	READING LAMP
F 16	11.4	15A	562604	RR JCT BOX	READING LAMP
F 17	11.3	7.5	562602	RR JCT BOX	HAT RACK LTS
F 18	11.5	10A	562407	RR JCT BOX	24V FLUORESCENT
F 19	11.5	10A	562407	RR JCT BOX	24V FLUORESCENT
F 20	11.4	5A	562259	FR JCT BOX	INTERIOR LTS SWITCH
F 21	19.1	10A	560061	RR JCT BOX	FUEL PRIME PUMP
F 22	13.1	10A	562407	FR JCT BOX	POWER OUTLET DASH R.H.
F 23	19.1	15A	562604	FR JCT BOX	DRIVER’S & ENTRANCE WINDOW LIFTER
F 24	13.1	15A	562604	FR JCT BOX	CIGAR LIGHTER & POWER OUTLET L.H.CONSOL
F 25	19.1	3A	562599	FR JCT BOX	SUN VISOR
F 26	14.1	7.5A	562602	FR JCT BOX	WATER HTR TIMER
F 27	11.4	10A	562407	RR JCT BOX	INDIRECT LTS
F 28	11.4	10A	562407	RR JCT BOX	INDIRECT LTS
F 29	28.1	7A		UNDER DASH	RADIO
F 30	28.1	7.5A		UNDER DASH	RADIO
F 31	25.1	5A	562259	FR JCT BOX	DESTINATION SIGN
F 32					
F 33	18.1	5A	562259	FR JCT BOX	KNEELING SYSTEM
F 34					
F 35					
F 36					
F 37					
F 38					
F 39					
F 40	28.5	7.5A		FR JCT BOX	CB OPTION
F 41					
F 42	28.5	3A		FR JCT BOX	WIRELESS MICRO CHARGER
F 43	1.2	3A	562599	BATT. COMP.	12V SIGNAL.TO BATT. MONITOR
F 44	1.2	3A	562599	BATT. COMP.	12V SIGNAL.TO BATT. MONITOR
F 45					
F 46	9.3sp1	10A	562407	RR JCT BOX	DOCKING LTS - OPTIONAL
F 47	16.1	7.5A	562602	FR JCT BOX	RR VIEW MIRROR
F 48	9.2	3A	562599	FR JCT BOX	KNEELING WARN. IND.
F 59	6.3	10A	562407	FR JCT BOX	EATON TRANS
F 61	30.1	1A	561134	FR JCT BOX	INTERCOM
F 63	25.1	3A	560893	DASH BOARD	BACK-UP MONITOR CLARION
F 70	27.1	7.5A	562602	GALLEY	RH CONTAINER
F 71	27.1	7.5A	562602	GALLEY	LH CONTAINER
F 72	27.1	10A	562407	GALLEY	REFRIGERATOR
F 73	27.1	35A	562608	GALLEY	COFFEEMAKER
F 74	27.1	7.5A	560598	GALLEY	REFRIGERATOR
F 75	9.2sp1	10A	562407	FR JCT BOX	CORNERING LTS

No.	PAGE	AMP	#PREV	LOCATION	FUNCTION
F 76	28.7	1A	562597	SOUND SYS JC BOX	DVD KARAOKE
F 77	28.7	3A	562599	SOUND SYS JC BOX	DVD KARAOKE
F 78					
F 79					
F 80	9.3	3A	560893	RR JCT BOX	CYCLOP CENTRE
F 81	6.3	10A	562407	FR JCT BOX	ZF TRANSMISSION
F 82	6.3	10A	562407	FR JCT BOX	ZF TRANSMISSION
F 83	6.3	10A	562407	FR JCT BOX	ZF TRANSMISSION
F 84	6.3	10A	562407	FR JCT BOX	ZF TRANSMISSION

FUSES CODE

No.	PAGE	AMP.	#PREV.	LOCATION	FUNCTION	No.	PAGE	AMP	#PREV	LOCATION	FUNCTION

FUSES CODE

No.	PAGE	AMP.	#PREV.	LOCATION	FUNCTION
F 1	6.1	10A	562407	FR JCT BOX	WORLD TRANSM 12V BATT
F 2	6.1	10A	562407	FR JCT BOX	WORLD TRANSM 12V IGN.
F 3	7.2	20A	562605	FR JCT BOX	ELECTRICAL HORNS
F 4	7.2	5A	562259	FR JCT BOX	FIRE ALARME
F 5					
F 6	17.1	3A	562599	FR JCT BOX	STEERING CONTROL
F 7S	4.2	3A	560893	RH ENG.CPT.	STARTER “ON” T.T.LT.
F 8					
F 9	11.1	3A	560893	BATT. COMPT.	BATT. COMPT. LTS
F 10	9.3	15A	562604	FR JCT BOX	FOG LTS
F 11					
F 12	11.3	10	562407	FR JCT BOX	AISLE LTS
F 13	11.3	7.5	562602	FR JCT BOX	EMERGENCY LTS
F 14	11.2	15A	562604	FR JCT BOX	DRIVER’S LTS SW.
F 15	11.4	15A	562604	RR JCT BOX	READING LAMP
F 16	11.4	15A	562604	RR JCT BOX	READING LAMP
F 17	11.3	7.5	562602	RR JCT BOX	HAT RACK LTS
F 18	11.5	10A	562407	RR JCT BOX	24V FLUORESCENT
F 19	11.5	10A	562407	RR JCT BOX	24V FLUORESCENT
F 20	11.4	5A	562259	FR JCT BOX	INTERIOR LTS SWITCH
F 21	19.1	10A	560061	RR JCT BOX	FUEL PRIME PUMP
F 22	13.1	10A	562407	FR JCT BOX	POWER OUTLET DASH R.H.
F 23	19.1	15A	562604	FR JCT BOX	DRIVER’S & ENTRANCE WINDOW LIFTER
F 24	13.1	15A	562604	FR JCT BOX	CIGAR LIGHTER & POWER OUTLET L.H.CONSOL
F 25	19.1	3A	562599	FR JCT BOX	SUN VISOR
F 26	14.1	7.5A	562602	FR JCT BOX	WATER HTR TIMER
F 27	11.4	10A	562407	RR JCT BOX	INDIRECT LTS
F 28	11.4	10A	562407	RR JCT BOX	INDIRECT LTS
F 29	28.1	7A		UNDER DASH	RADIO
F 30	28.1	7.5A		UNDER DASH	RADIO
F 31	25.1	5A	562259	FR JCT BOX	DESTINATION SIGN
F 32					
F 33	18.1	5A	562259	FR JCT BOX	KNEELING SYSTEM
F 34					
F 35					
F 36					
F 37					
F 38					
F 39					
F 40	28.5	7.5A		FR JCT BOX	CB OPTION
F 41					
F 42	28.5	3A		FR JCT BOX	WIRELESS MICRO CHARGER
F 43	1.2	3A	562599	BATT. COMP.	12V SIGNAL.TO BATT. MONITOR
F 44	1.2	3A	562599	BATT. COMP.	12V SIGNAL.TO BATT. MONITOR
F 45					
F 46	9.3sp1	10A	562407	RR JCT BOX	DOCKING LTS - OPTIONAL
F 47	16.1	7.5A	562602	FR JCT BOX	RR VIEW MIRROR
F 48	9.2	3A	562599	FR JCT BOX	KNEELING WARN. IND.
F 59	6.3	10A	562407	FR JCT BOX	EATON TRANS
F 61	30.1	1A	561134	FR JCT BOX	INTERCOM
F 63	25.1	3A	560893	DASH BOARD	BACK-UP MONITOR CLARION
F 70	27.1	7.5A	562602	GALLEY	RH CONTAINER
F 71	27.1	7.5A	562602	GALLEY	LH CONTAINER
F 72	27.1	10A	562407	GALLEY	REFRIGERATOR
F 73	27.1	35A	562608	GALLEY	COFFEEMAKER
F 74	27.1	7.5A	560598	GALLEY	REFRIGERATOR

No.	PAGE	AMP	#PREV	LOCATION	FUNCTION
F 75	9.2sp1	10A	562407	FR JCT BOX	CORNERING LTS
F 76	28.7	3A	562599	SOUND SYS JC BOX	DVD KARAOKE
F 77					
F 78					
F 79					
F 80	9.3	3A	560893	RR JCT BOX	CYCLOP CENTRE
F 81	6.3	10A	562407	FR JCT BOX	ZF TRANSMISSION
F 82	6.3	10A	562407	FR JCT BOX	ZF TRANSMISSION
F 83	6.3	10A	562407	FR JCT BOX	ZF TRANSMISSION
F 84	6.3	10A	562407	FR JCT BOX	ZF TRANSMISSION

FUSES CODE

No.	PAGE	AMP.	#PREV.	LOCATION	FUNCTION	No.	PAGE	AMP	#PREV	LOCATION	FUNCTION

LOGIC GATE

TRUTH TABLE

AND GATE

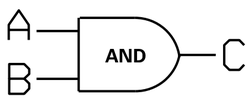

INPUT		OUT
A	B	C
Ø	Ø	Ø
Ø	1	Ø
1	Ø	Ø
1	1	1

•OUTPUT IS 1 WHEN ALL INPUT IS 1

NAND GATE

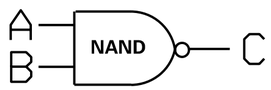

INPUT		OUT
A	B	C
Ø	Ø	1
Ø	1	1
1	Ø	1
1	1	Ø

• OUTPUT IS Ø WHEN ALL INPUT IS 1

OR GATE

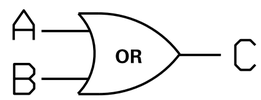

INPUT		OUT
A	B	C
Ø	Ø	Ø
Ø	1	1
1	Ø	1
1	1	1

• OUTPUT IS 1 WHEN AT LEAST ONE INPUT IS 1

NOR GATE

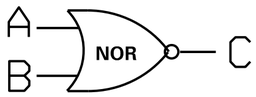

INPUT		OUT
A	B	C
Ø	Ø	1
Ø	1	Ø
1	Ø	Ø
1	1	Ø

• OUTPUT IS 1 WHEN NONE INPUT IS 1

NOT GATE

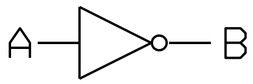

INPUT	OUT
A	B
Ø	1
1	Ø

• OUTPUT IS REVERSE OF INPUT

ON-DELAY

XX SECOND
AFTER A=1
THAN B=1

OFF-DELAY

XX SECOND
AFTER A=Ø
THAN B=Ø

POSITIVE INPUT

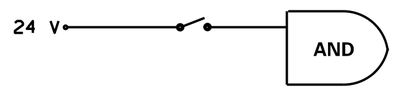

INPUT CONNECTED WITH SIGNAL 12V OR 24V
SWITCH CLOSED • LEVEL 1
SWITCH OPENED • LEVEL Ø

NEGATIVE INPUT

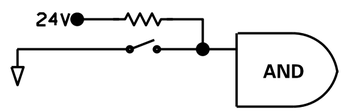

INPUT CONNECTED WITH SIGNAL GROUND
SWITCH CLOSED • LEVEL Ø
SWITCH OPENED • LEVEL 1

INPUT OR OUTPUT LEVEL

LEVEL 1 = 12 VOLTS OR 24 VOLTS

LEVEL Ø = Ø VOLT (TO GROUND)

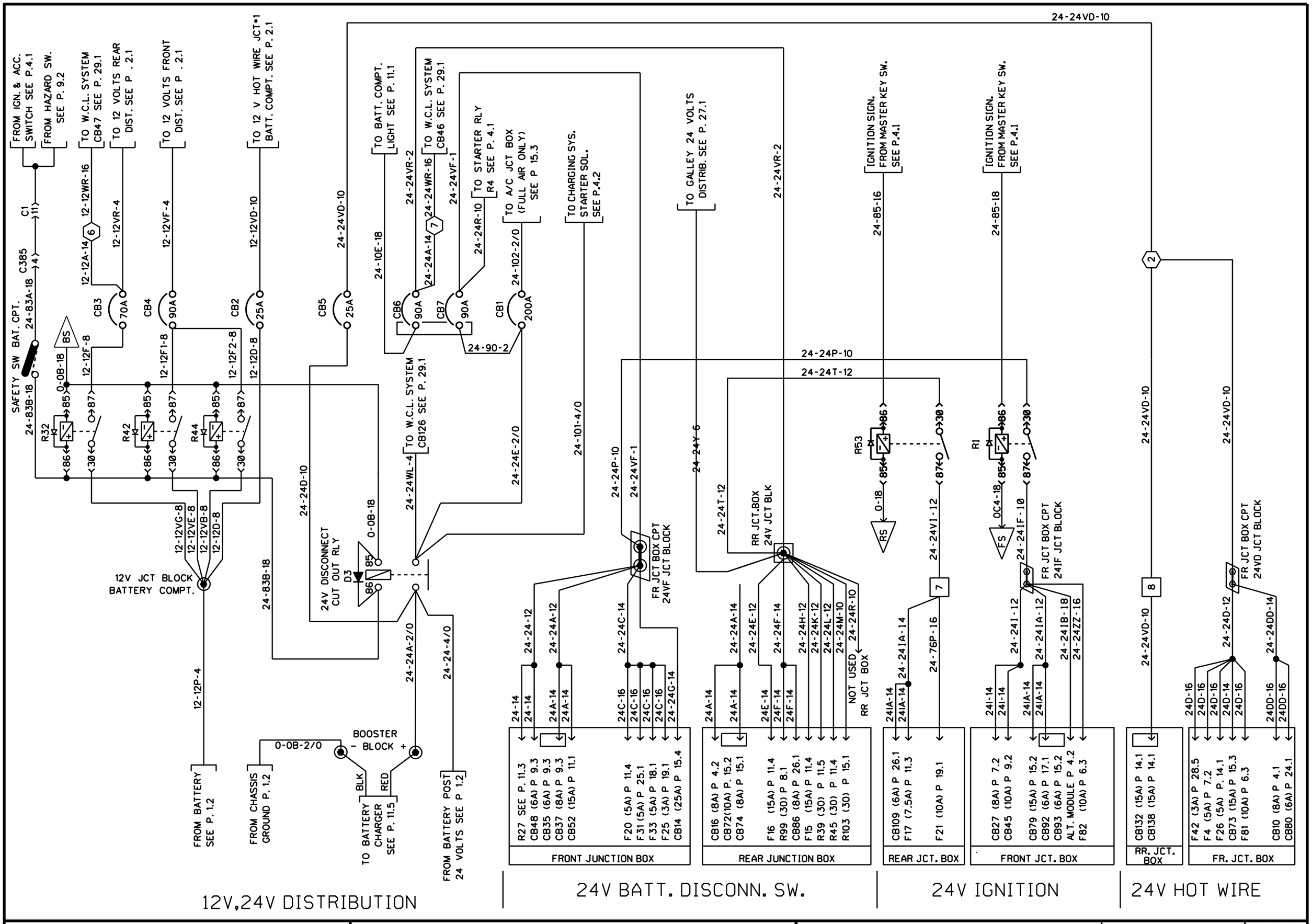

PREVOST	WIRING DIAGRAM	NO: D060993	PAGE: 1.1	REVISION 00

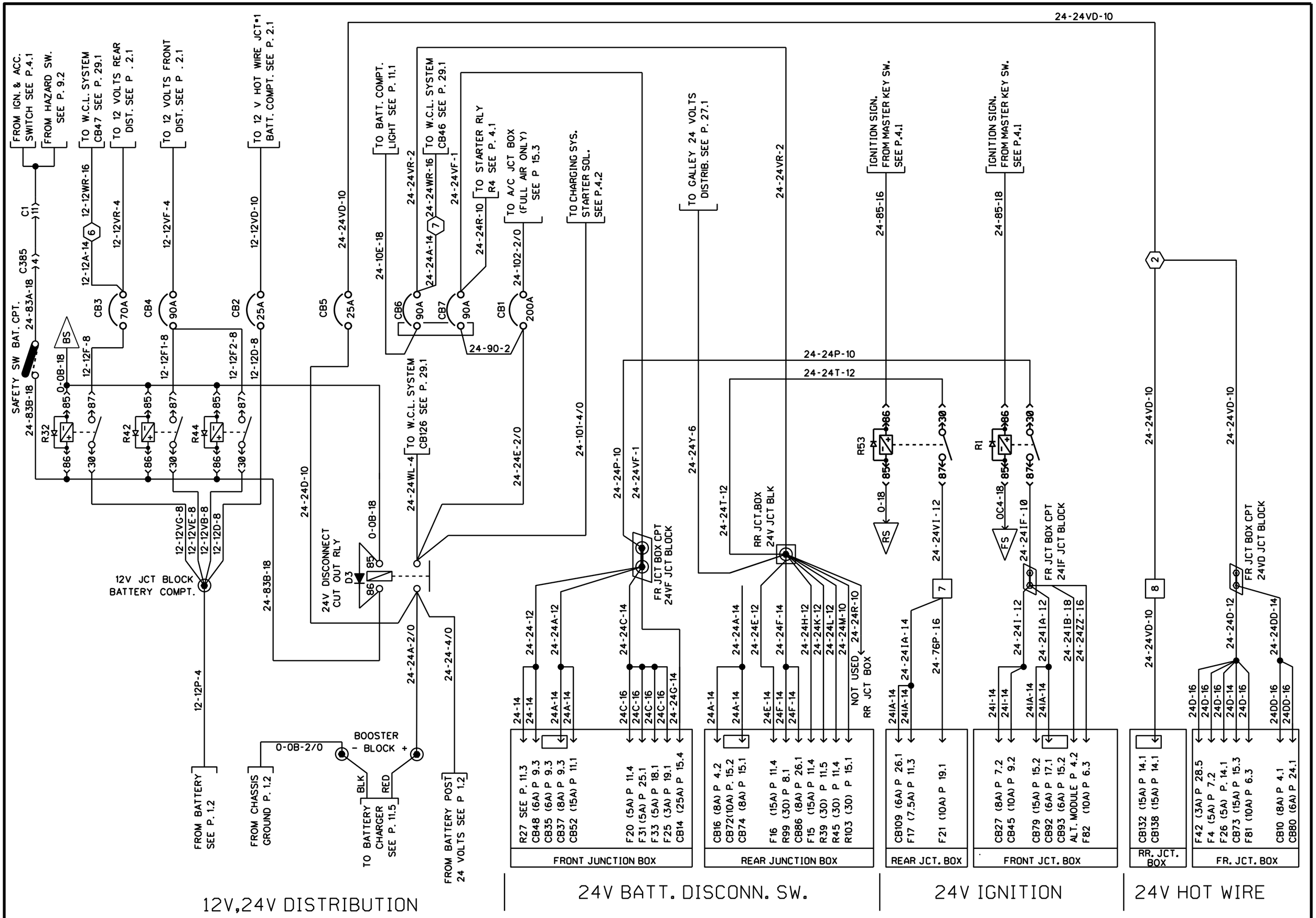

PREVOST	WIRING DIAGRAM	NO: D060993	PAGE: 1.1	REVISION 01

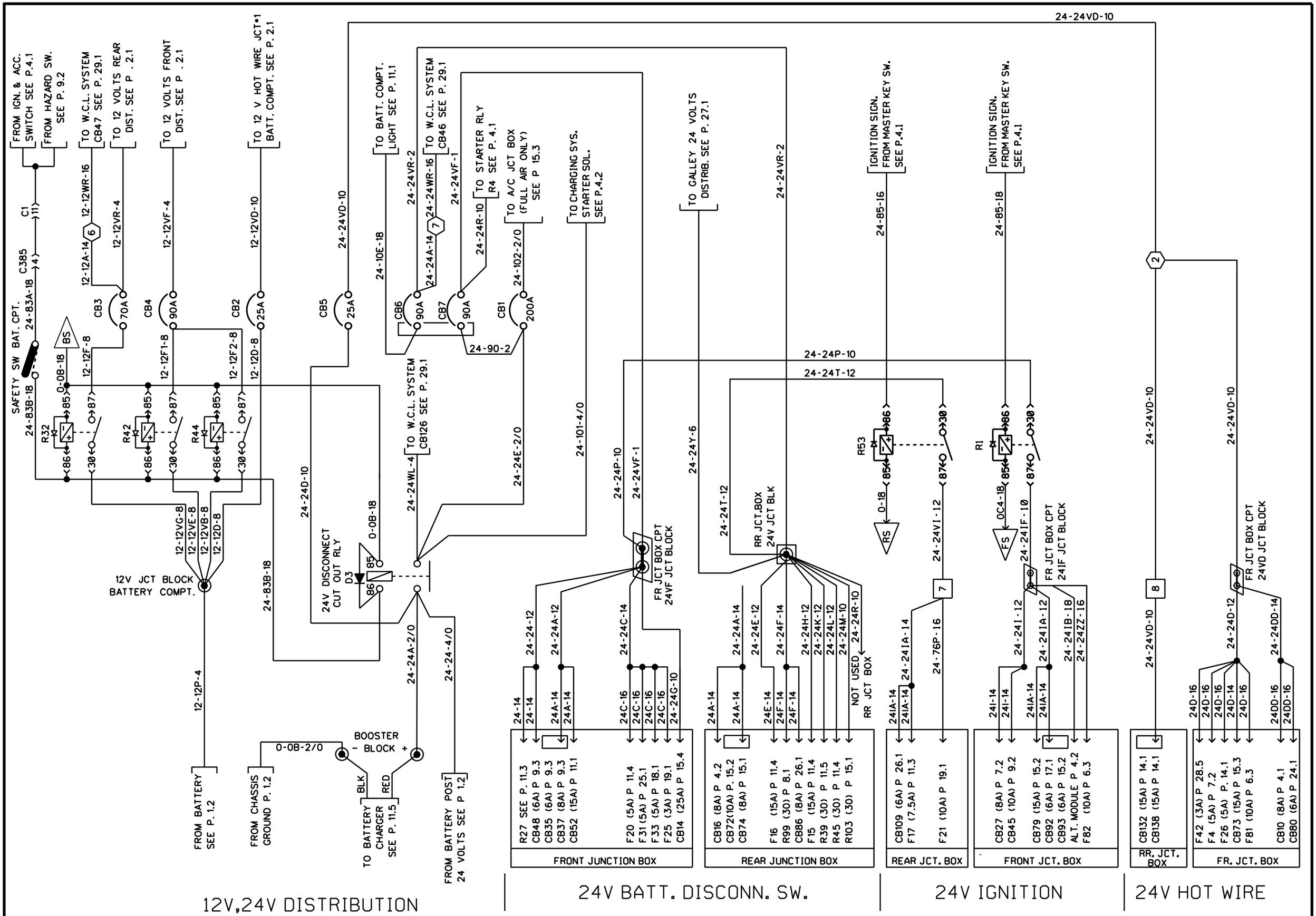

PREVOST	WIRING DIAGRAM	NO: D060993	PAGE: 1.1	REVISION 02

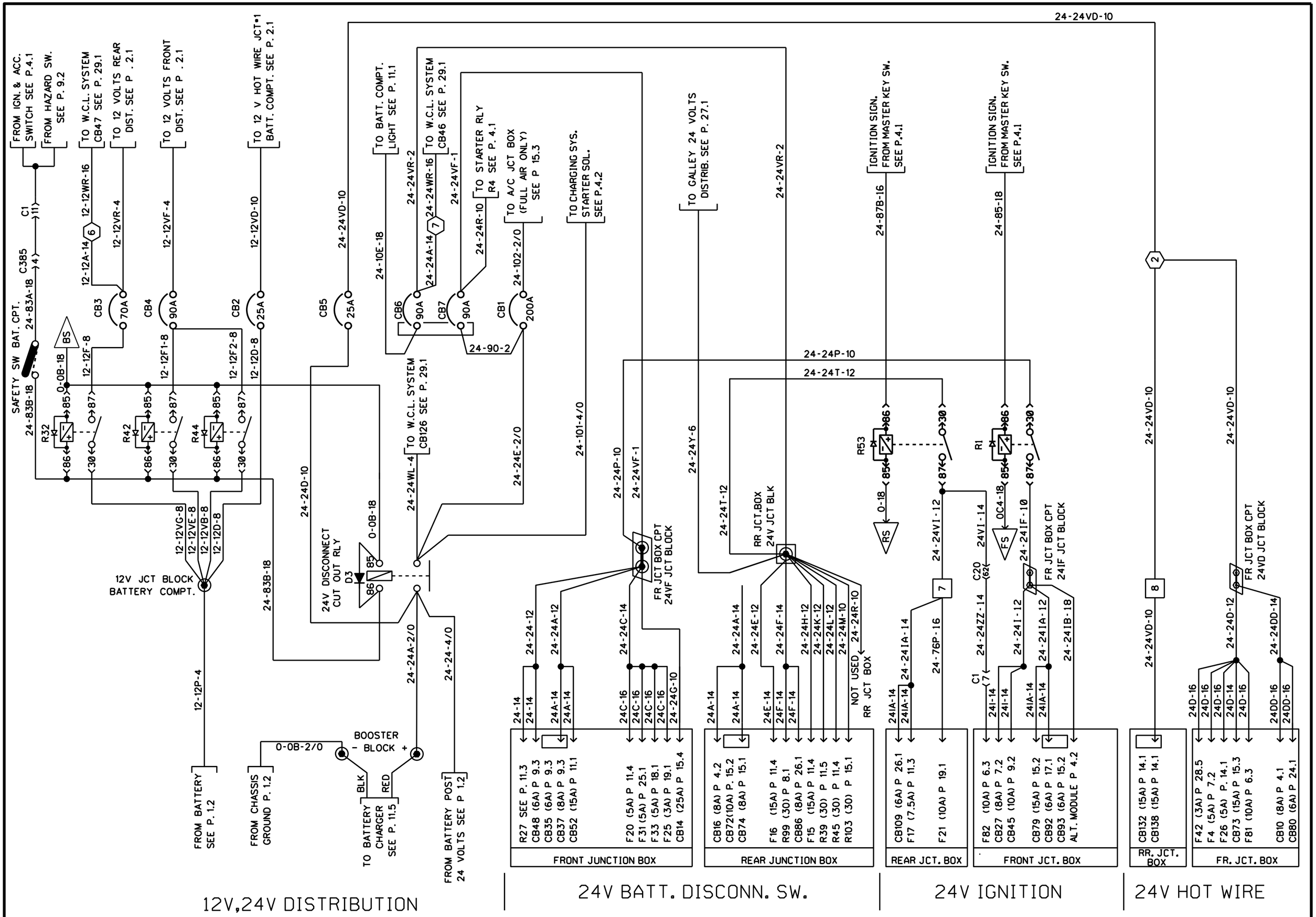

PREVOST	WIRING DIAGRAM	NO: D060993	PAGE: 1.1	REVISION 03

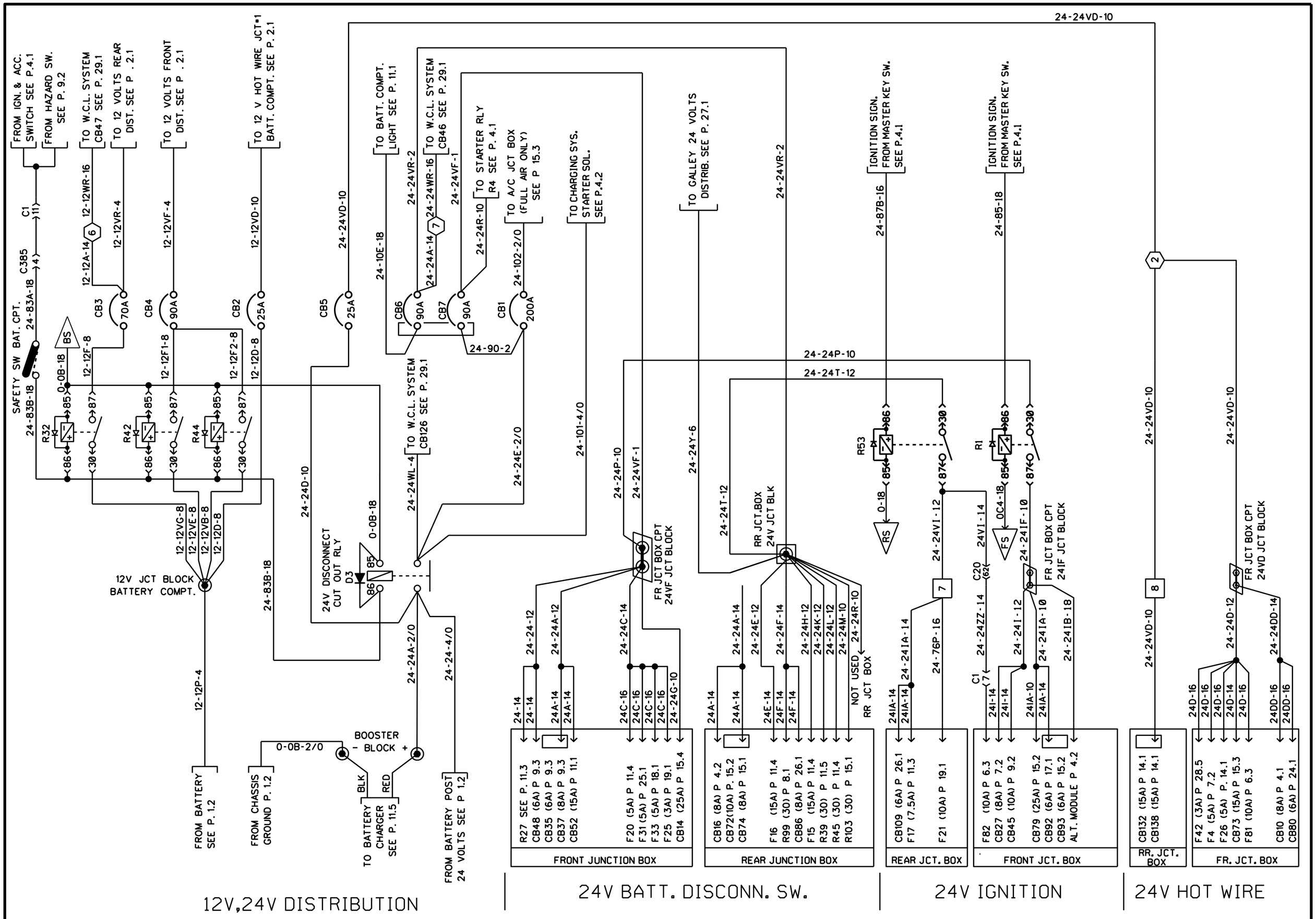

PREVOST	WIRING DIAGRAM	NO: D060993	PAGE: 1.1	REVISION 11

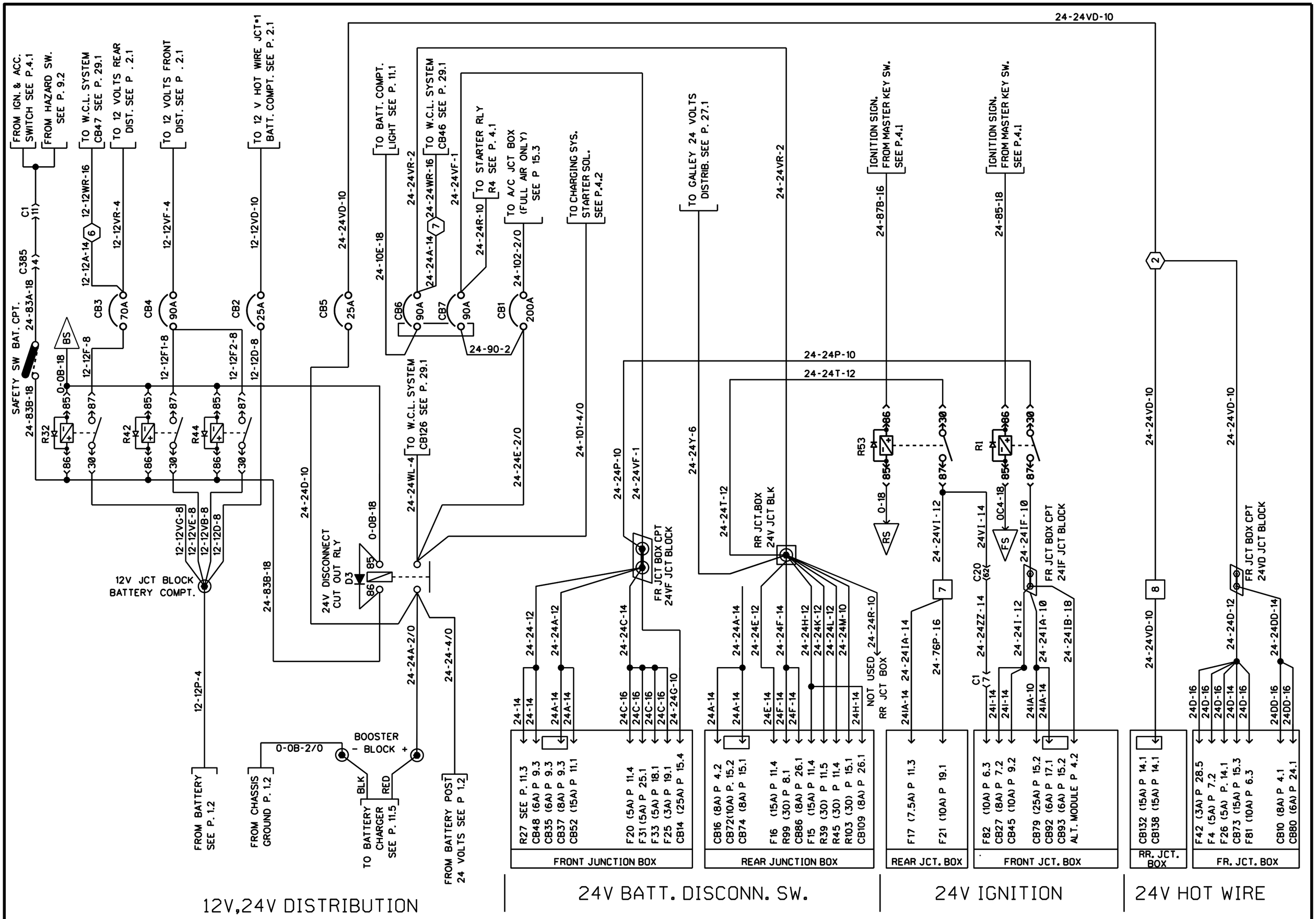

PREVOST	WIRING DIAGRAM	NO: D060993	PAGE: 1.1	REVISION 18

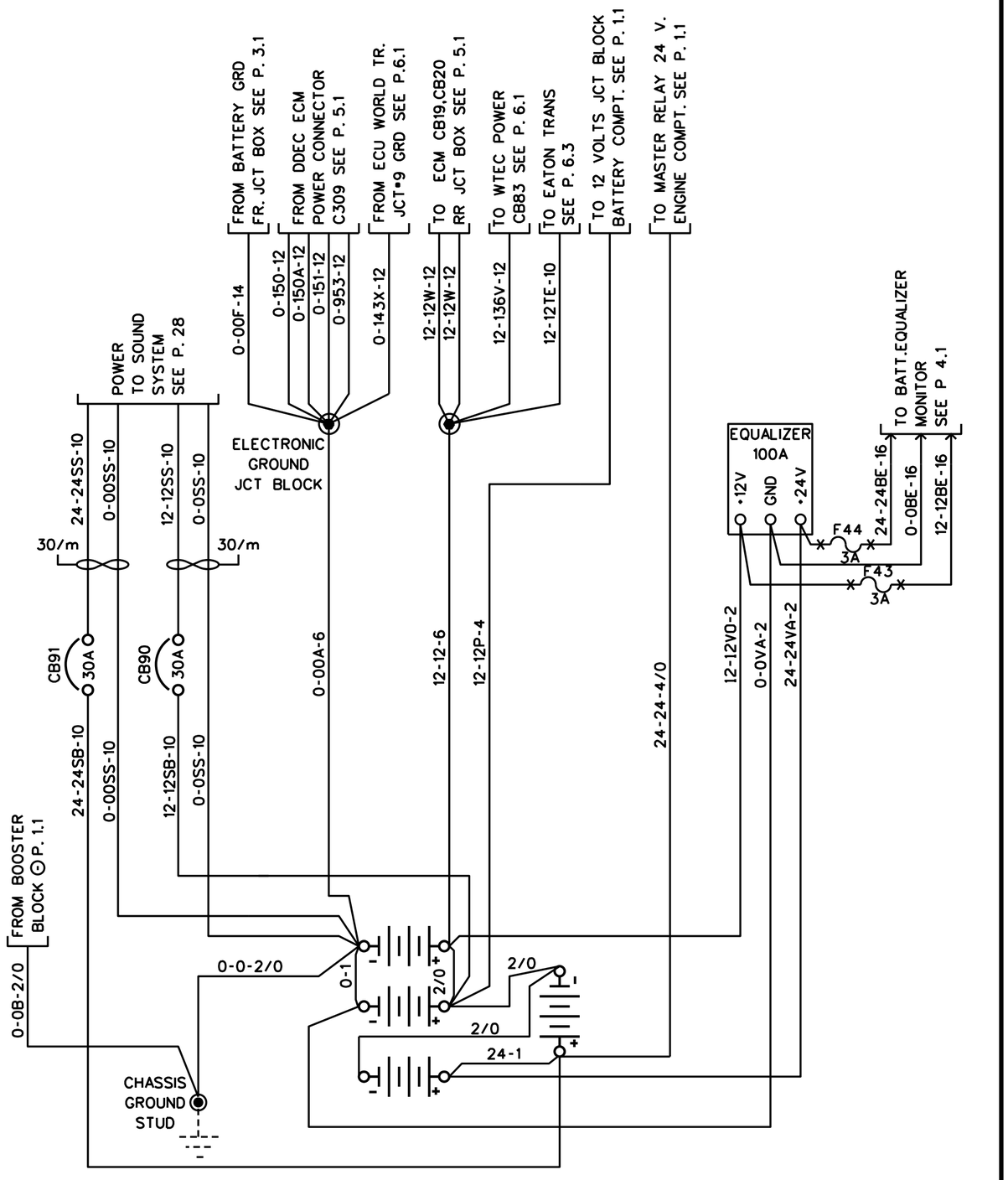

SERIE 31 BATTERY

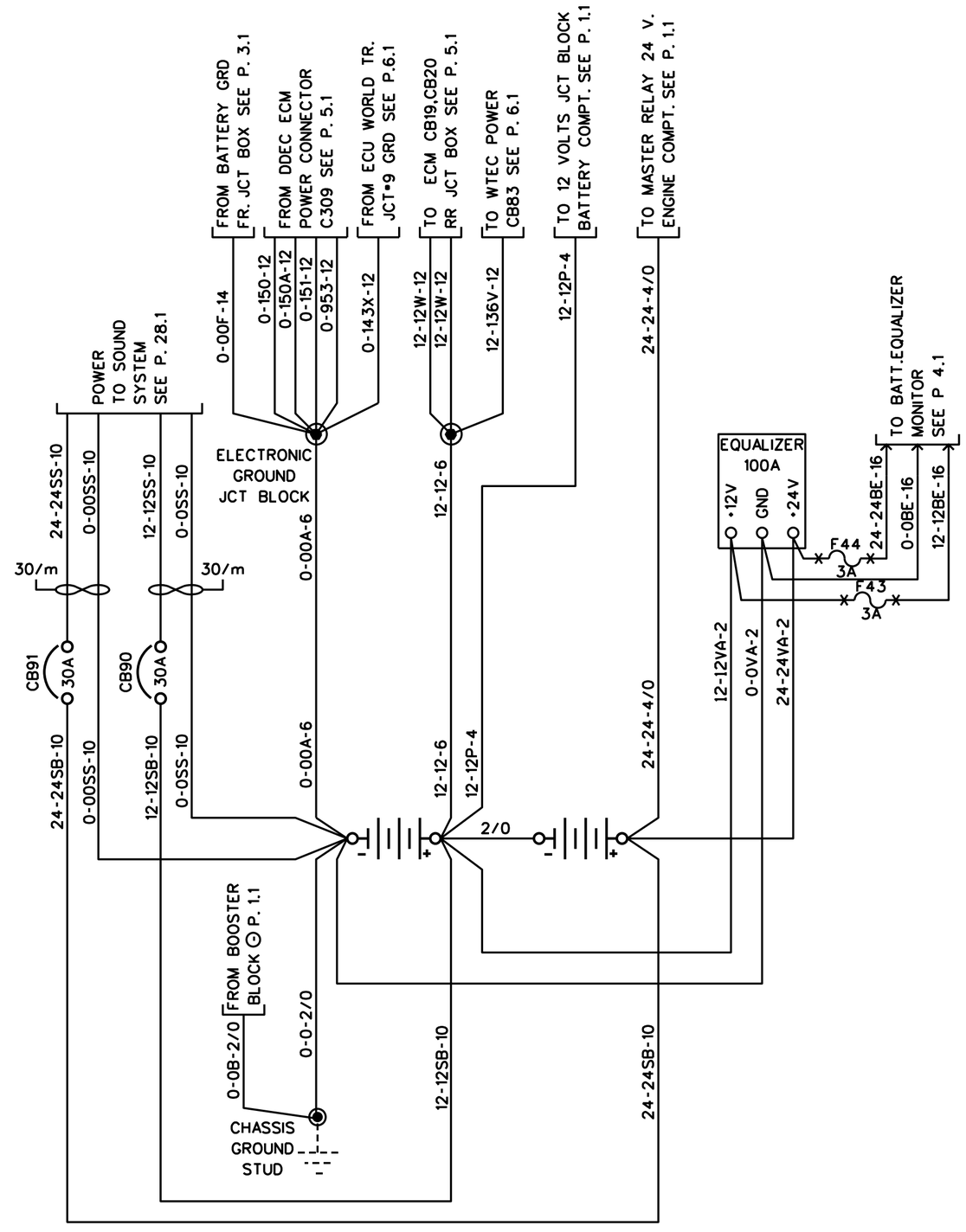

SERIE 8D BATTERY

PREVOST	WIRING DIAGRAM	NO: D060993	PAGE: 1.2	REVISION 00

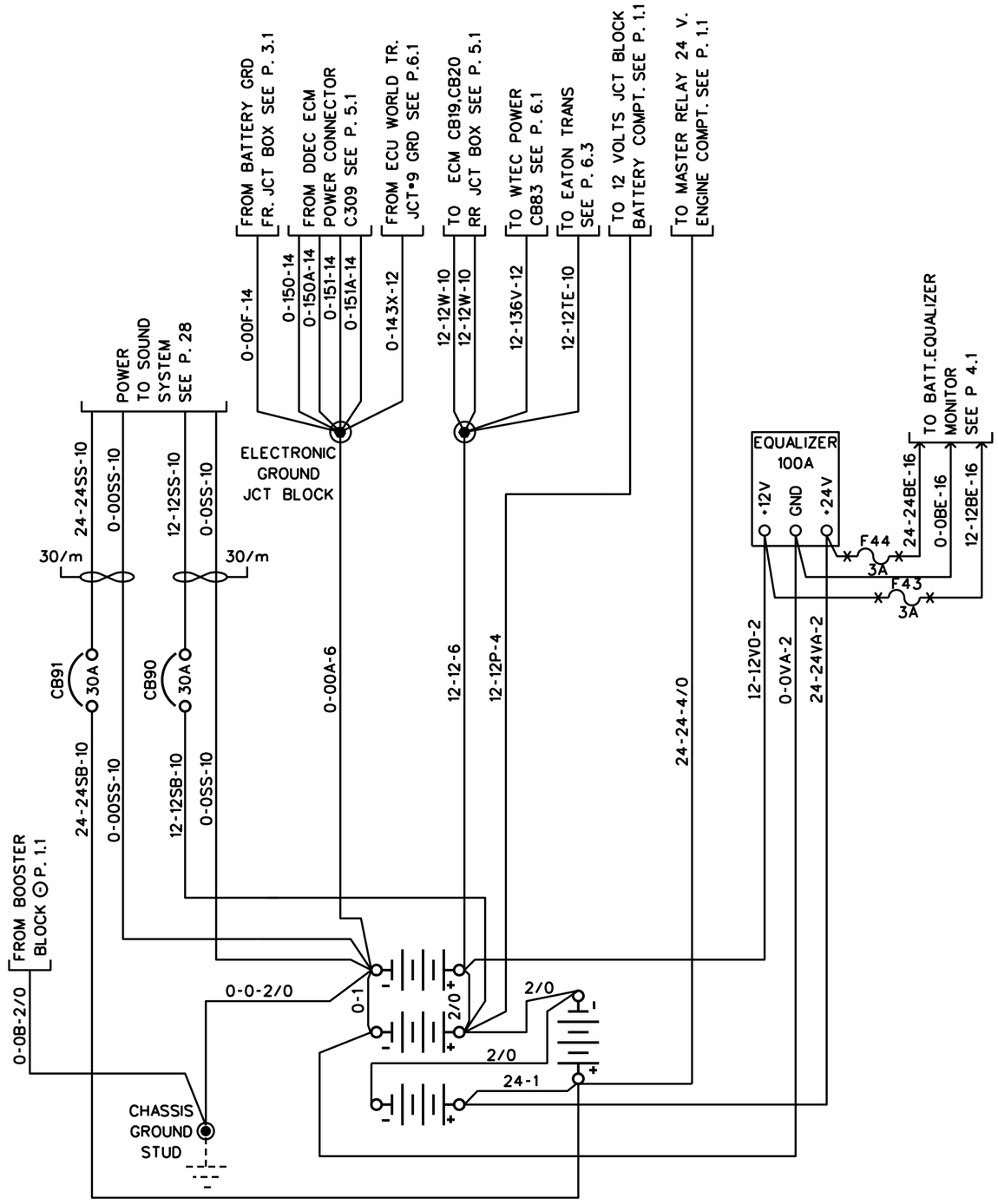

SERIE 31 BATTERY

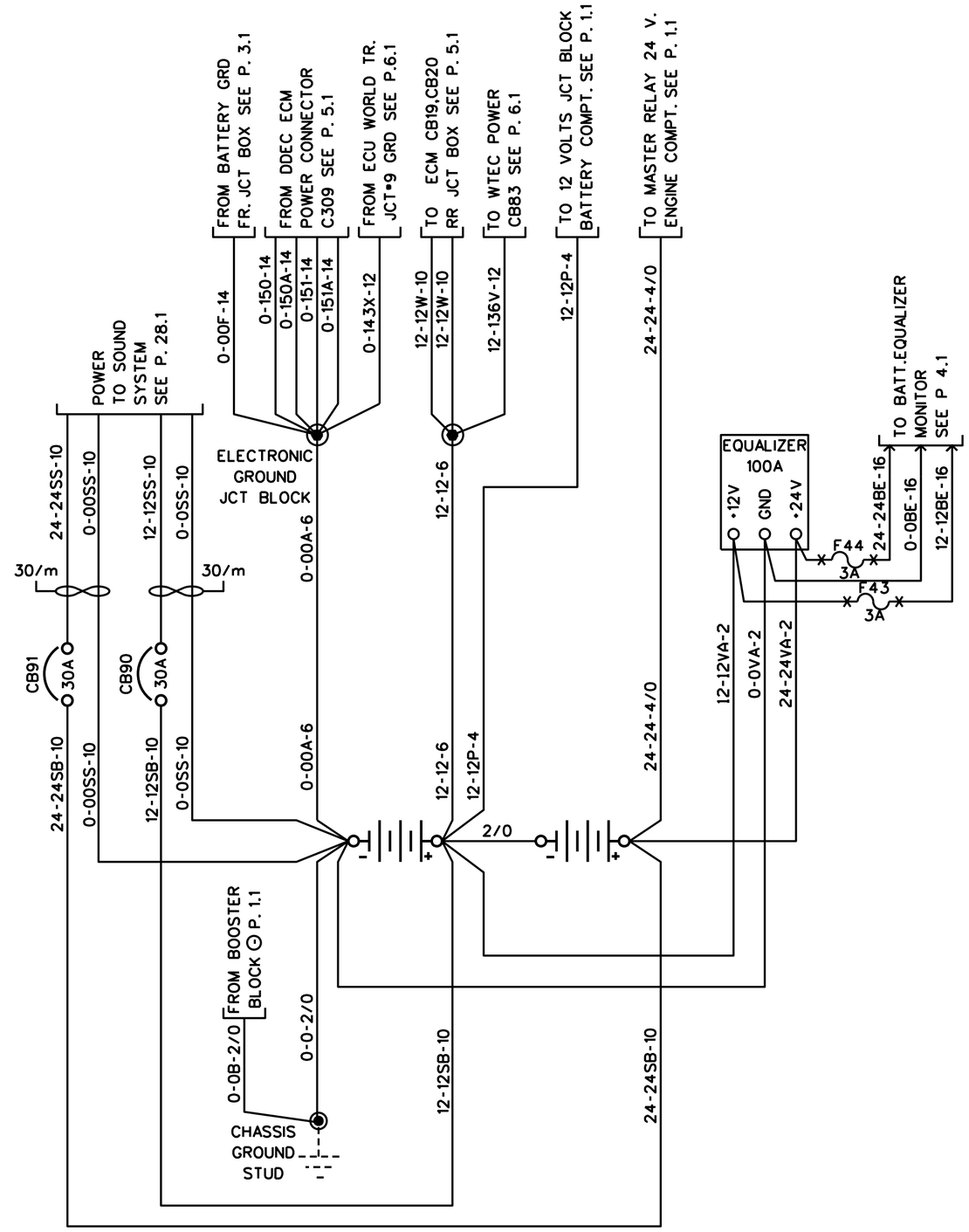

SERIE 8D BATTERY

PREVOST	WIRING DIAGRAM	NO: D060993	PAGE: 1.2	REVISION 08

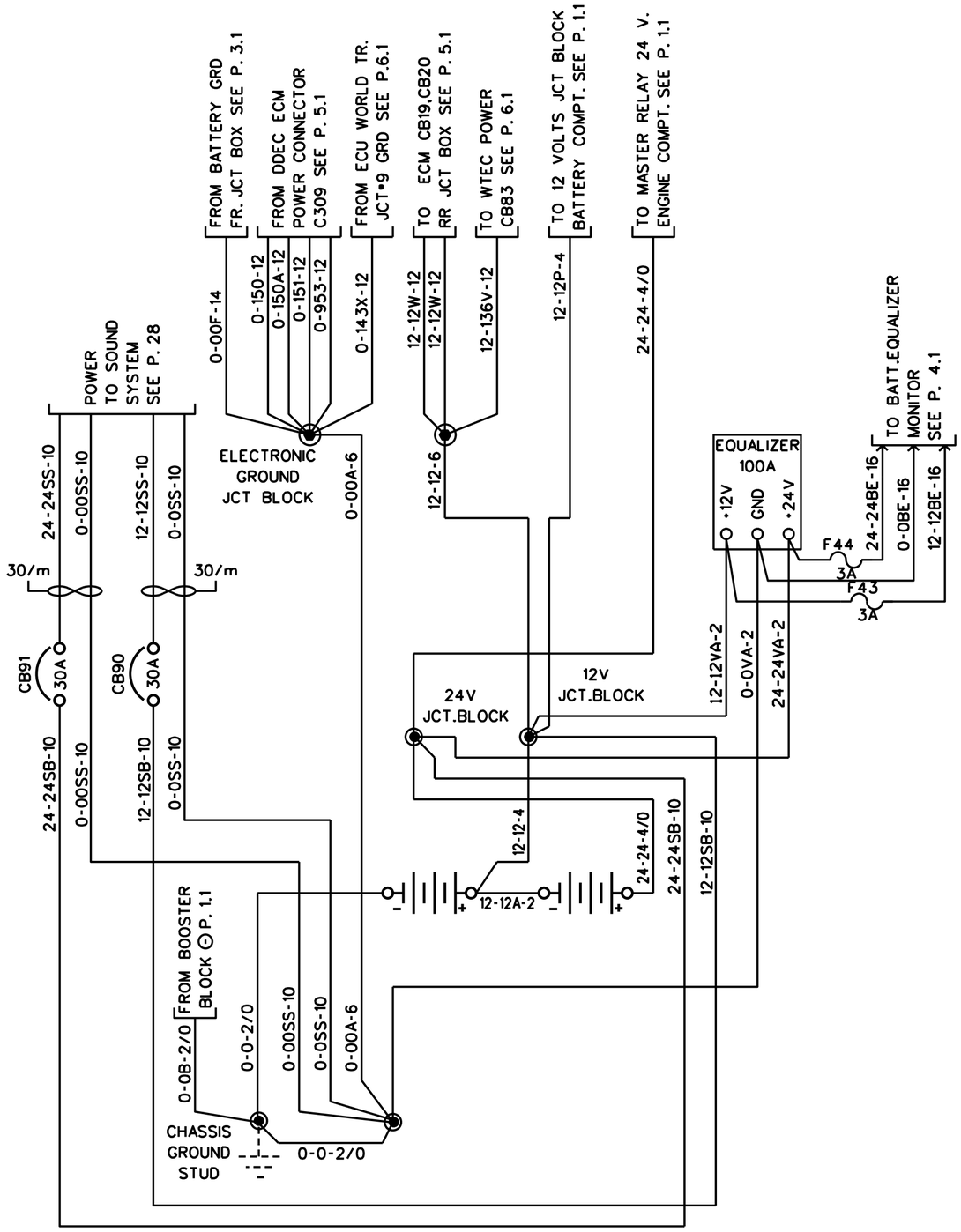

SERIE 8D BATTERY TOP POST

PREVOST	WIRING DIAGRAM	NO: D060993	PAGE: 1.2sp1	REVISION 00

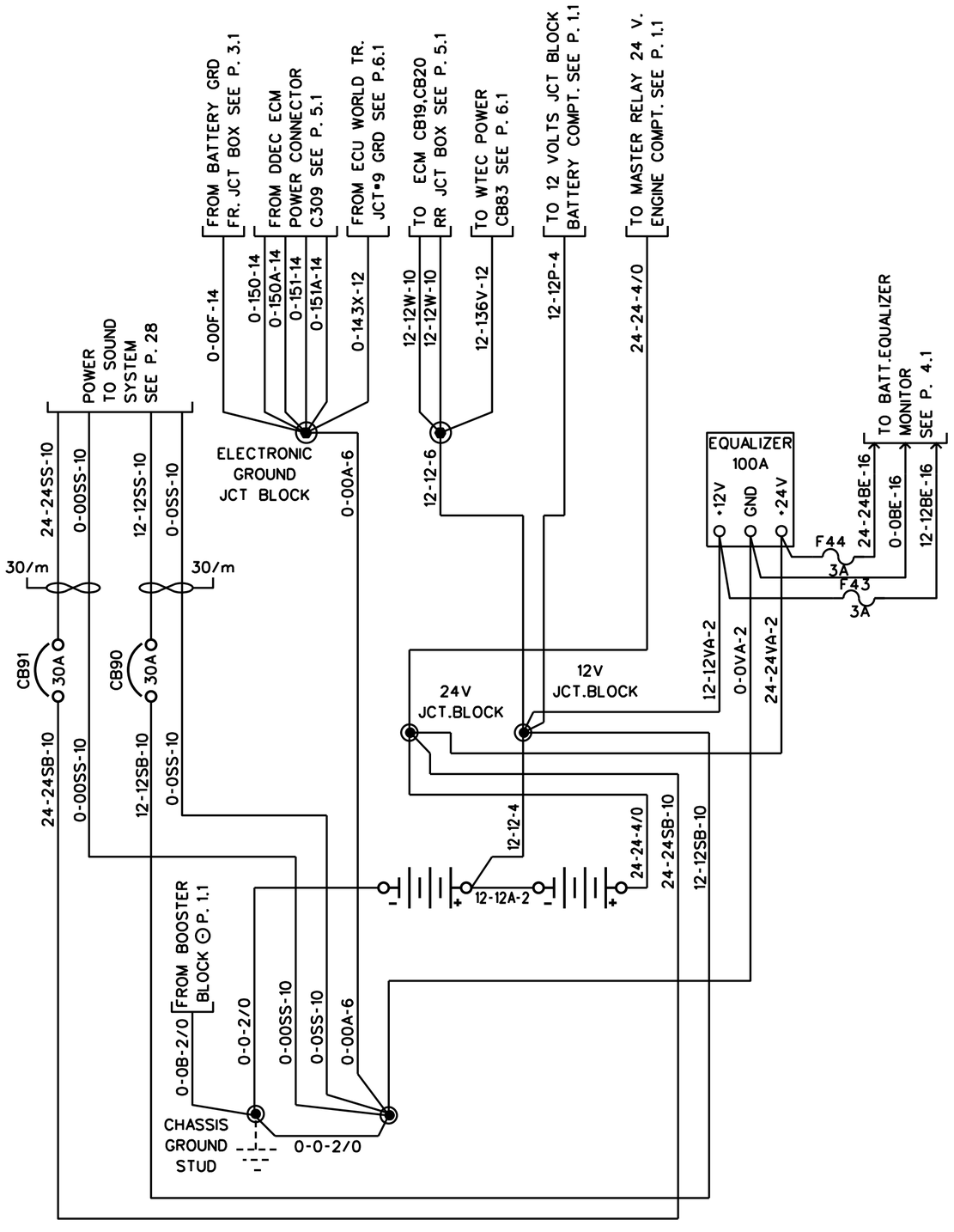

SERIE 8D BATTERY TOP POST

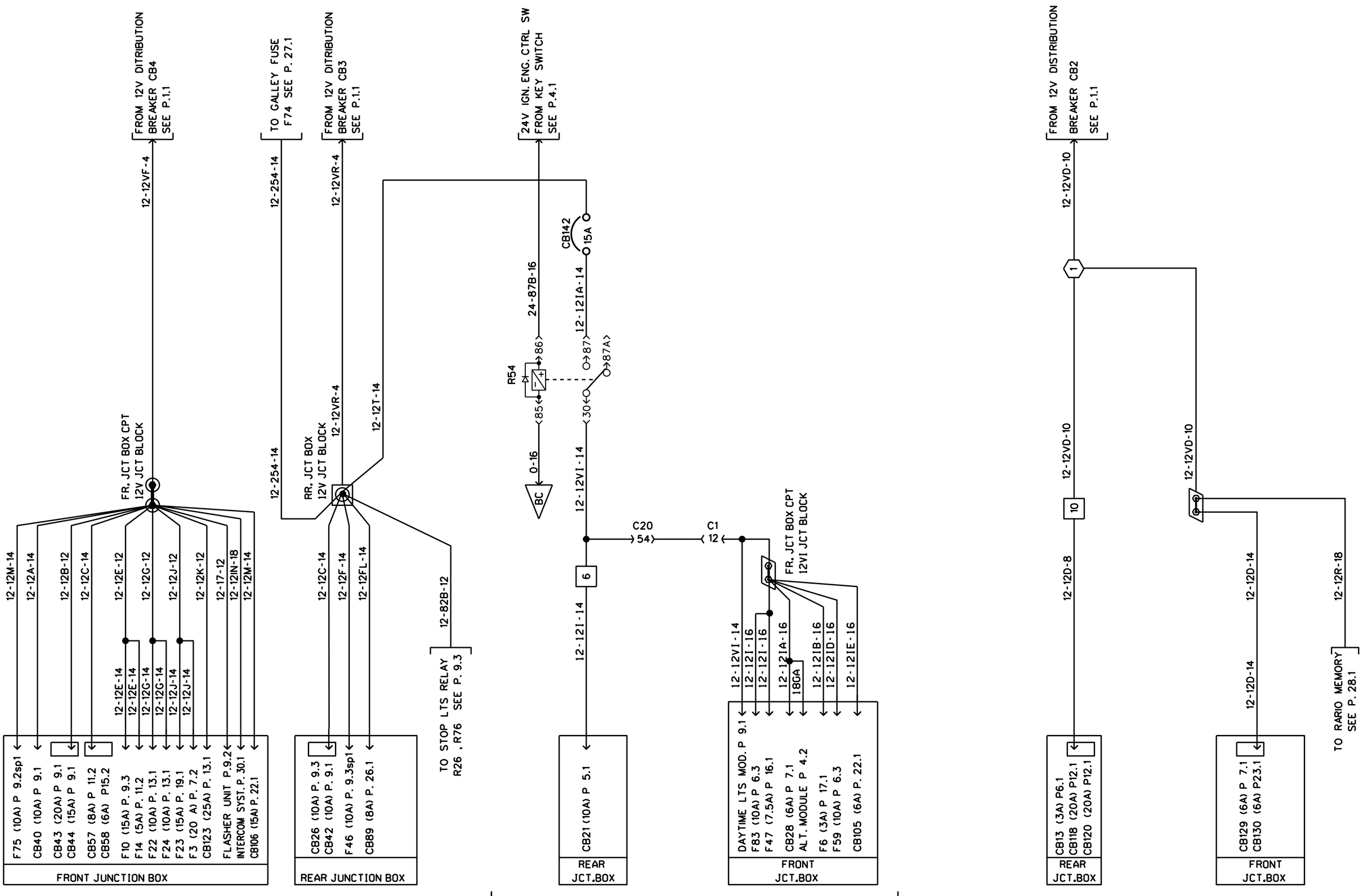

PREVOST	WIRING DIAGRAM	NO: D060993	PAGE: 2.1	REVISION 00

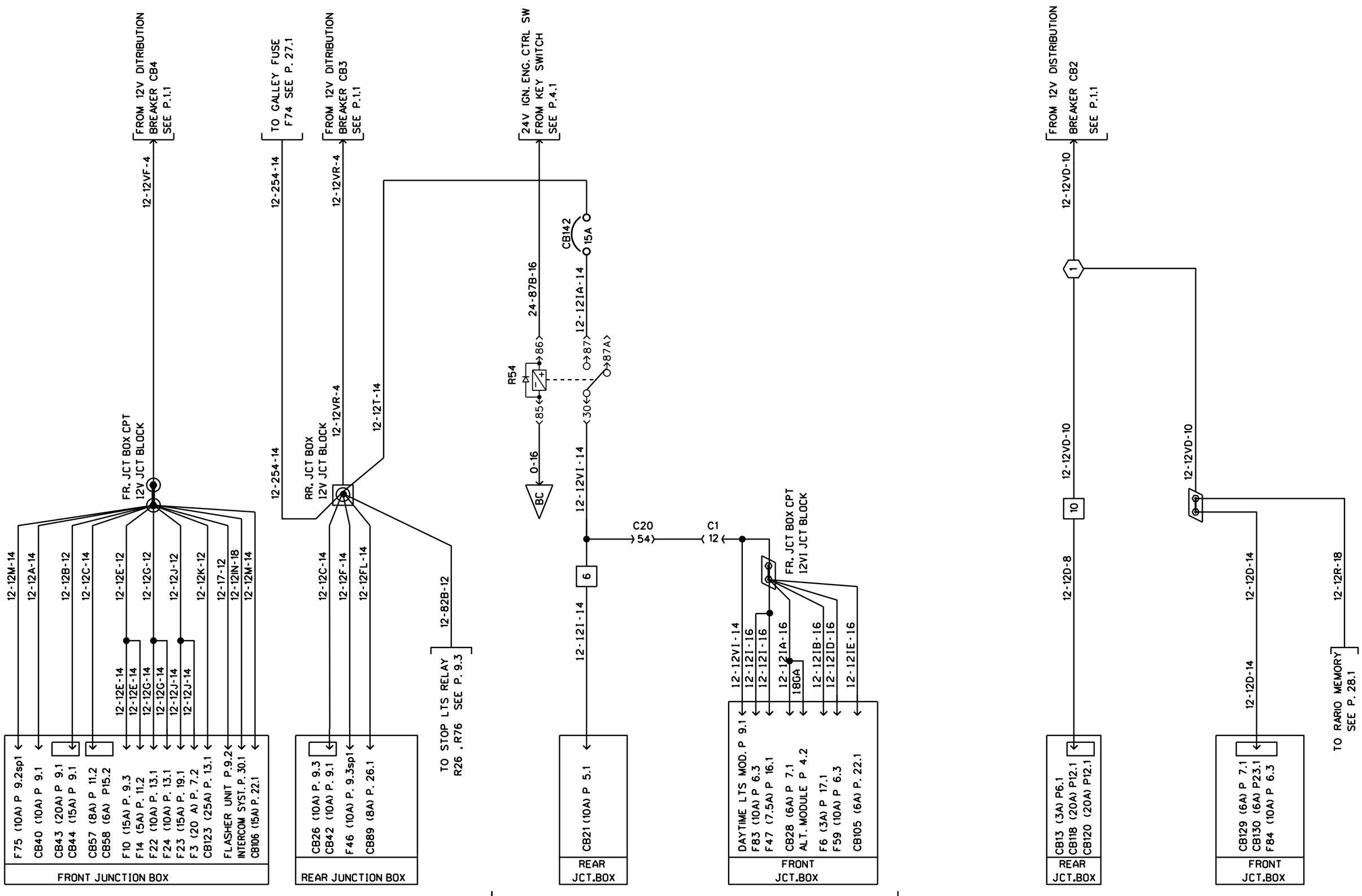

PREVOST	WIRING DIAGRAM	NO: D060993	PAGE: 2.1	REVISION 01

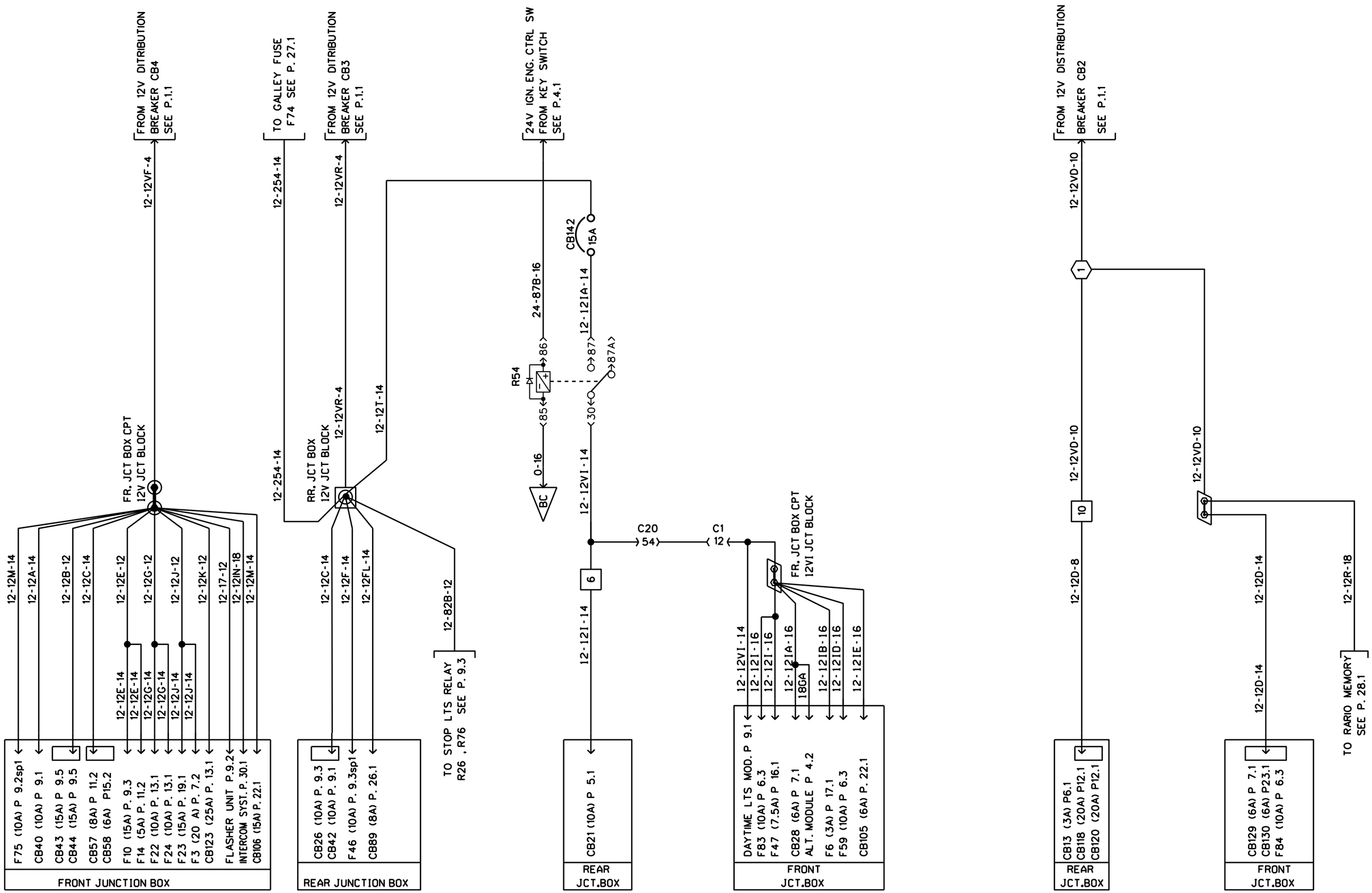

PREVOST	WIRING DIAGRAM	NO: D060993	PAGE: 2.1	REVISION 08

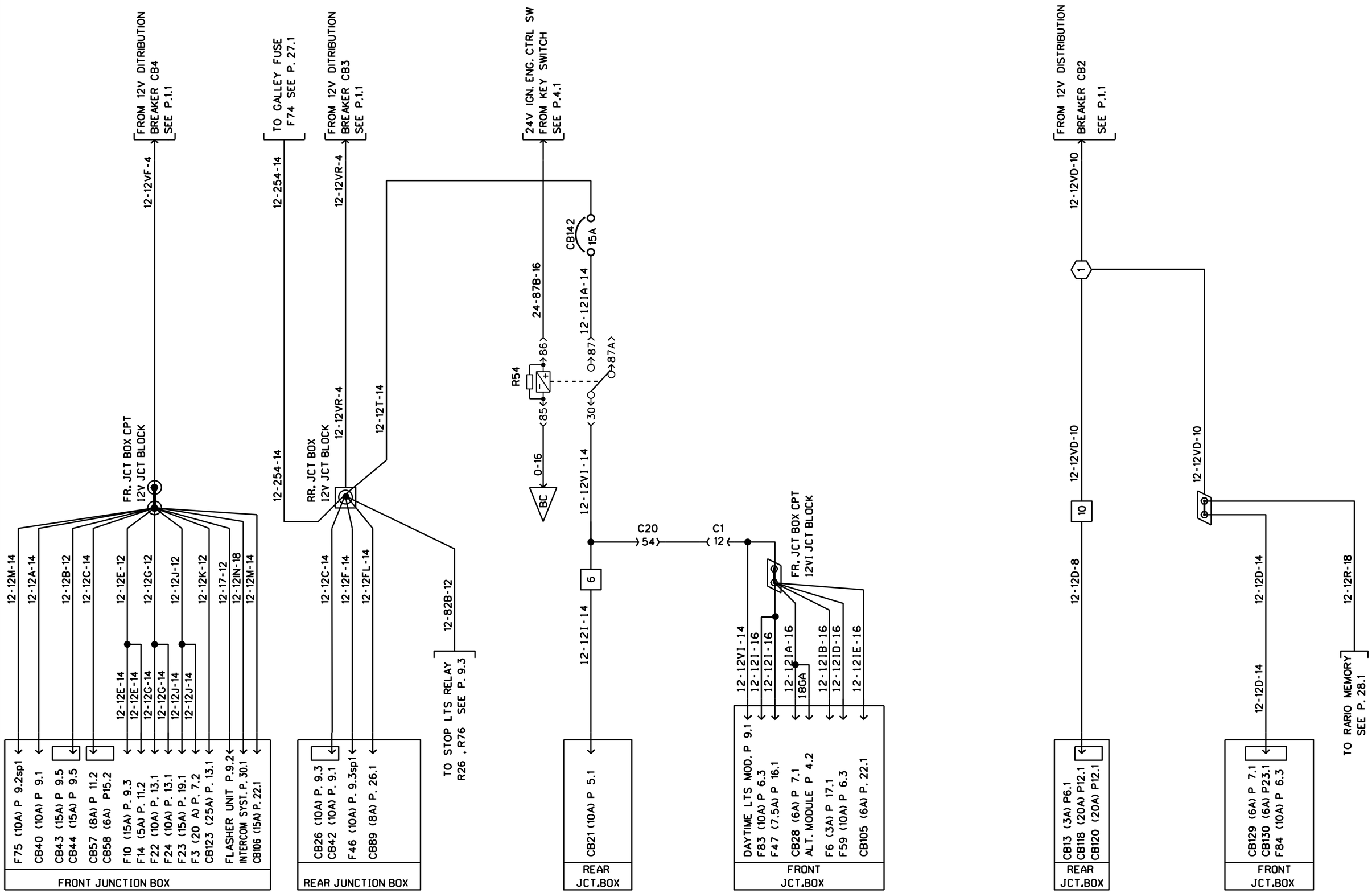

PREVOST	WIRING DIAGRAM	NO: D060993	PAGE: 2.1	REVISION 15

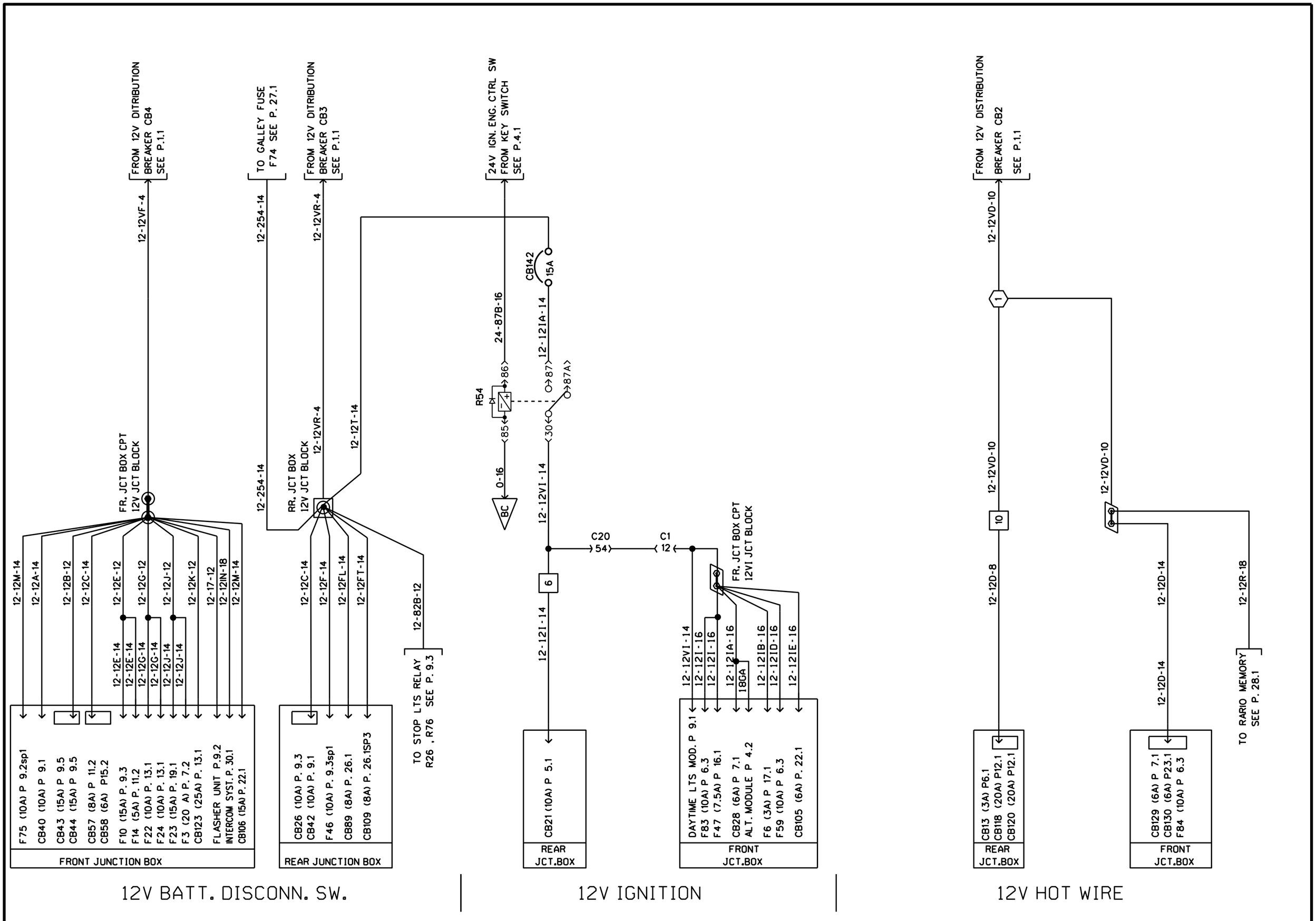

PREVOST	WIRING DIAGRAM	NO: D060993	PAGE: 2.1sp1	REVISION 14

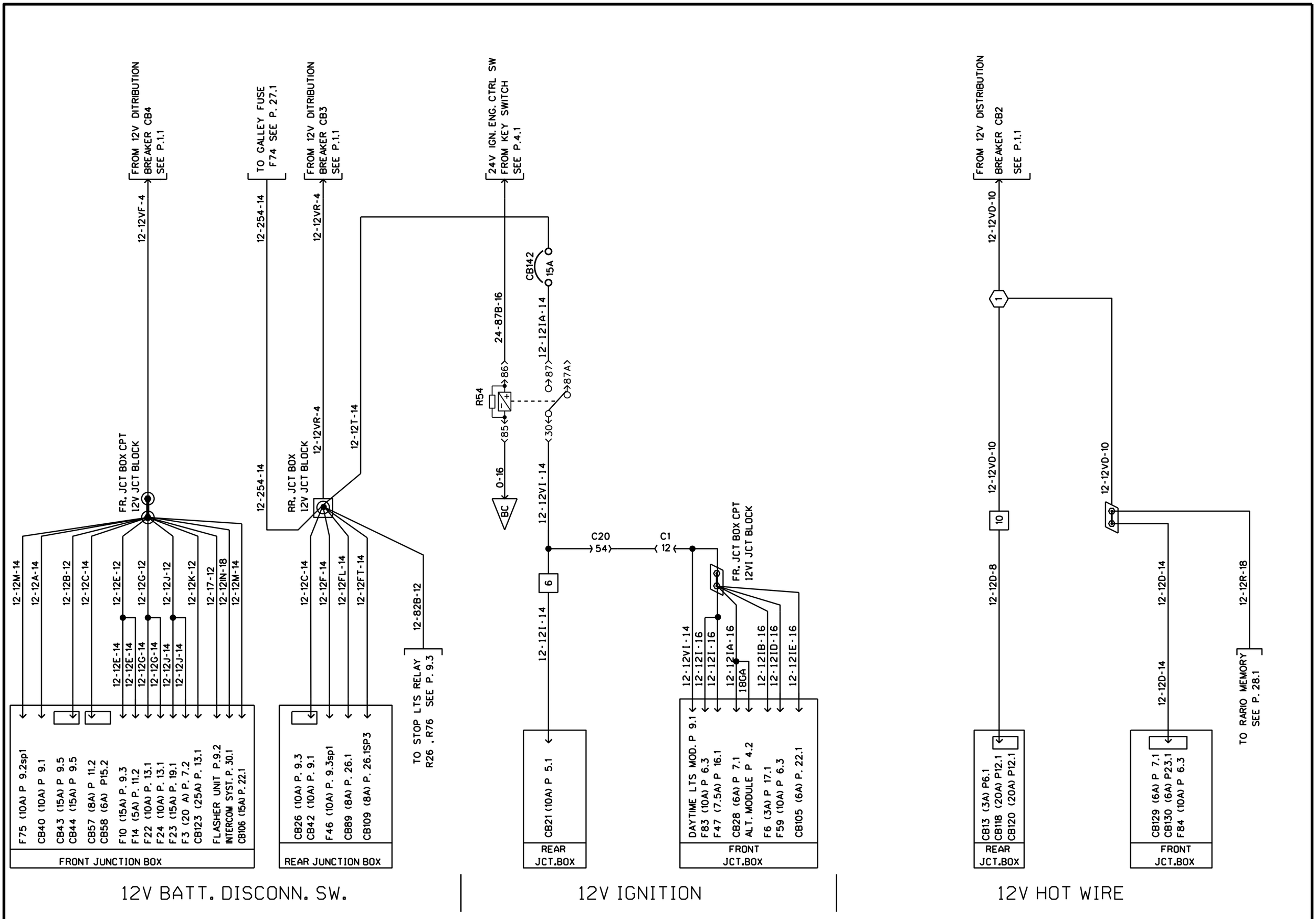

PREVOST	WIRING DIAGRAM	NO: D060993	PAGE: 2.1sp1	REVISION 15

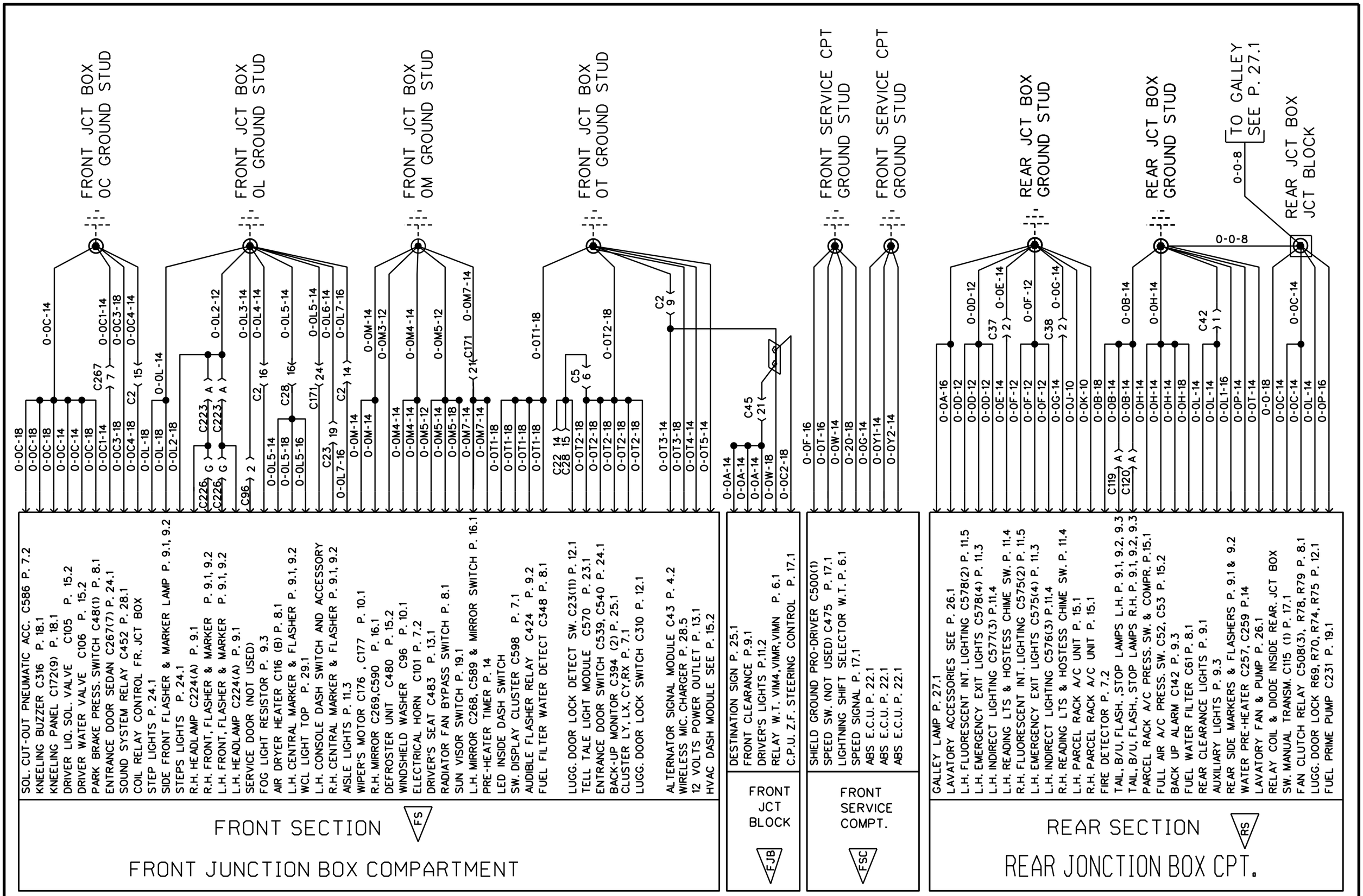

PREVOST	WIRING DIAGRAM	NO: D060993	PAGE: 3.1	REVISION 00

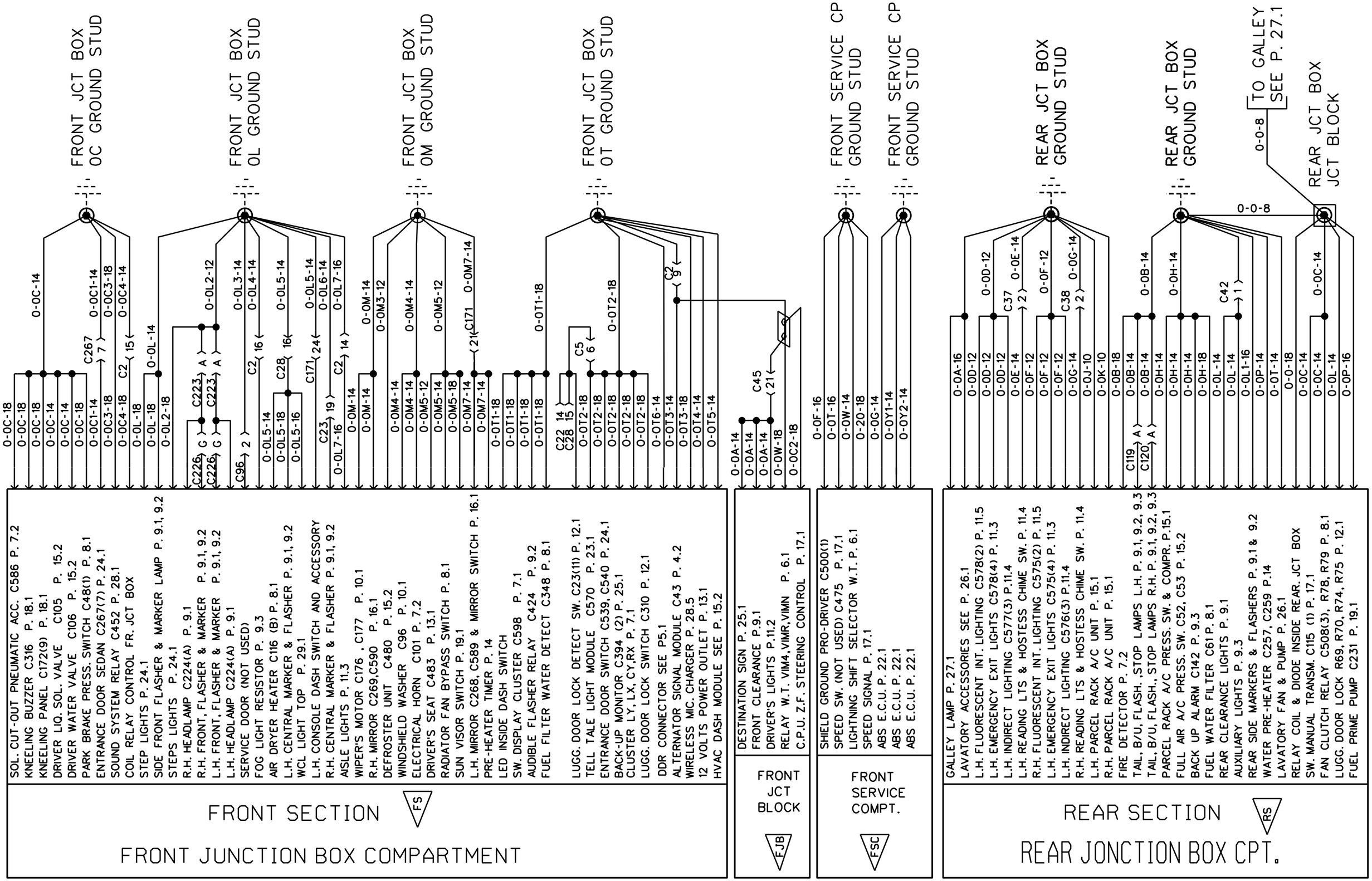

PREVOST	WIRING DIAGRAM	NO: D060993	PAGE: 3.1	REVISION 08

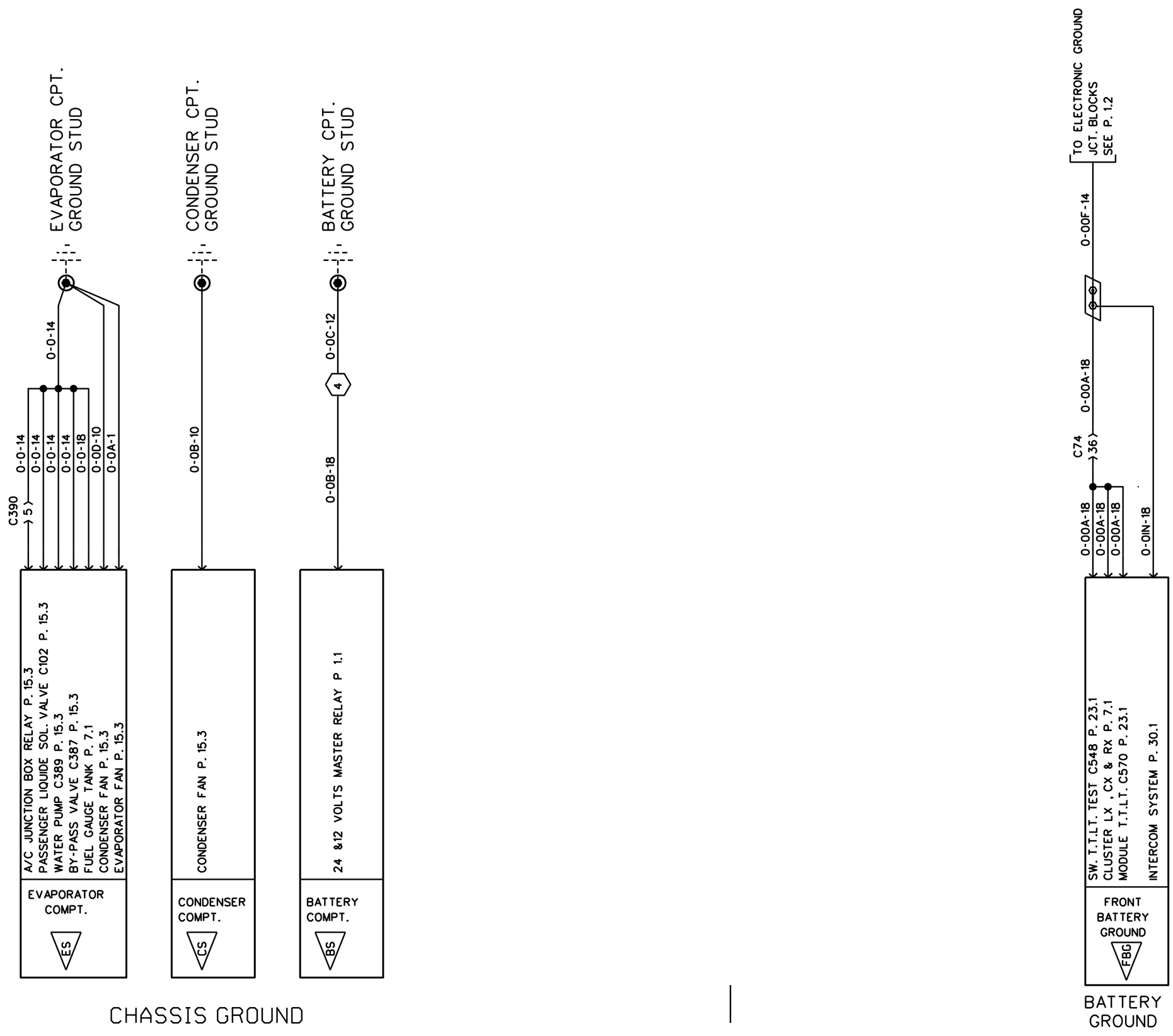

PREVOST	WIRING DIAGRAM	NO: D060993	PAGE: 3.2	REVISION 00

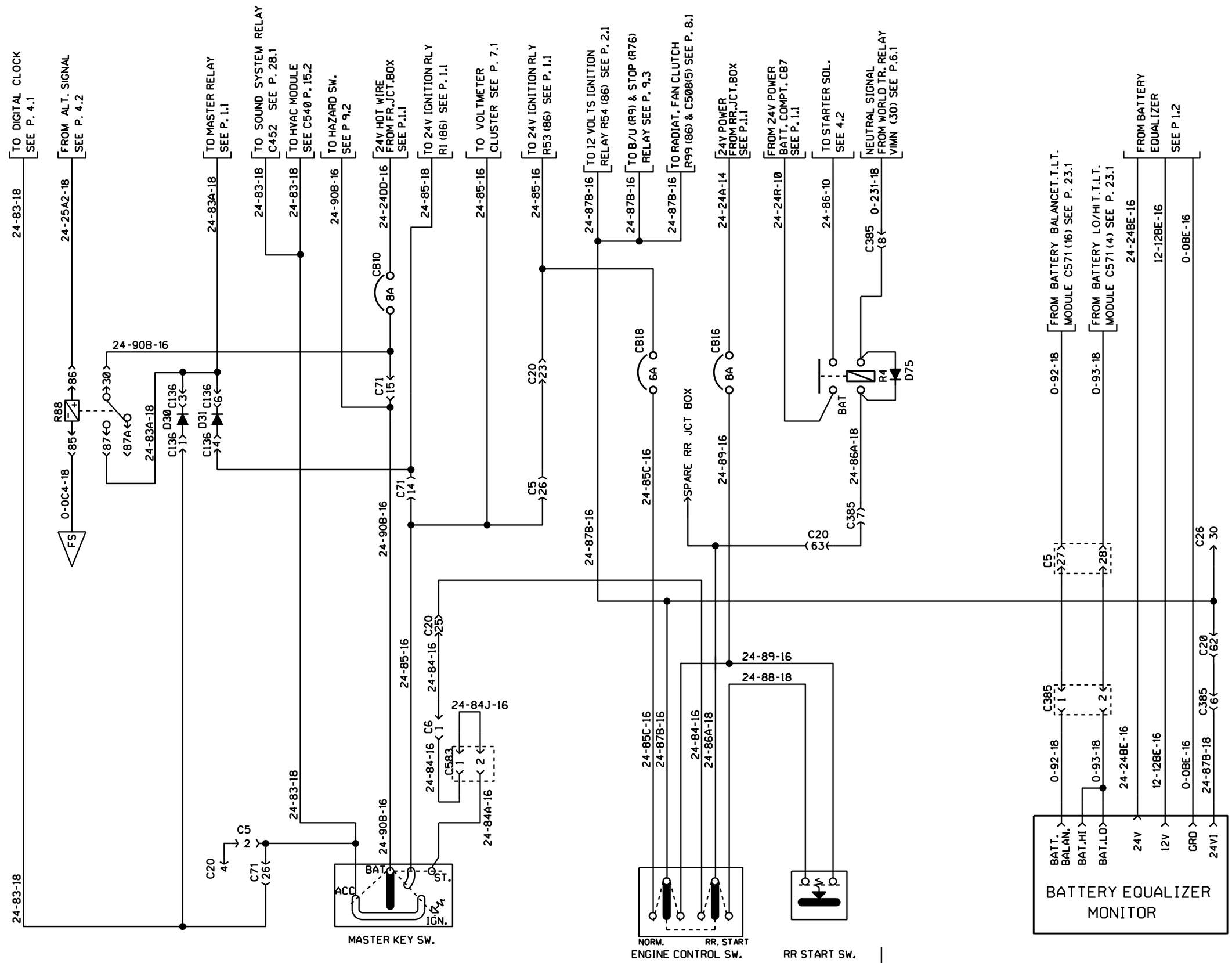

PREVOST	WIRING DIAGRAM	NO: D060993	PAGE: 4.1	REVISION 00

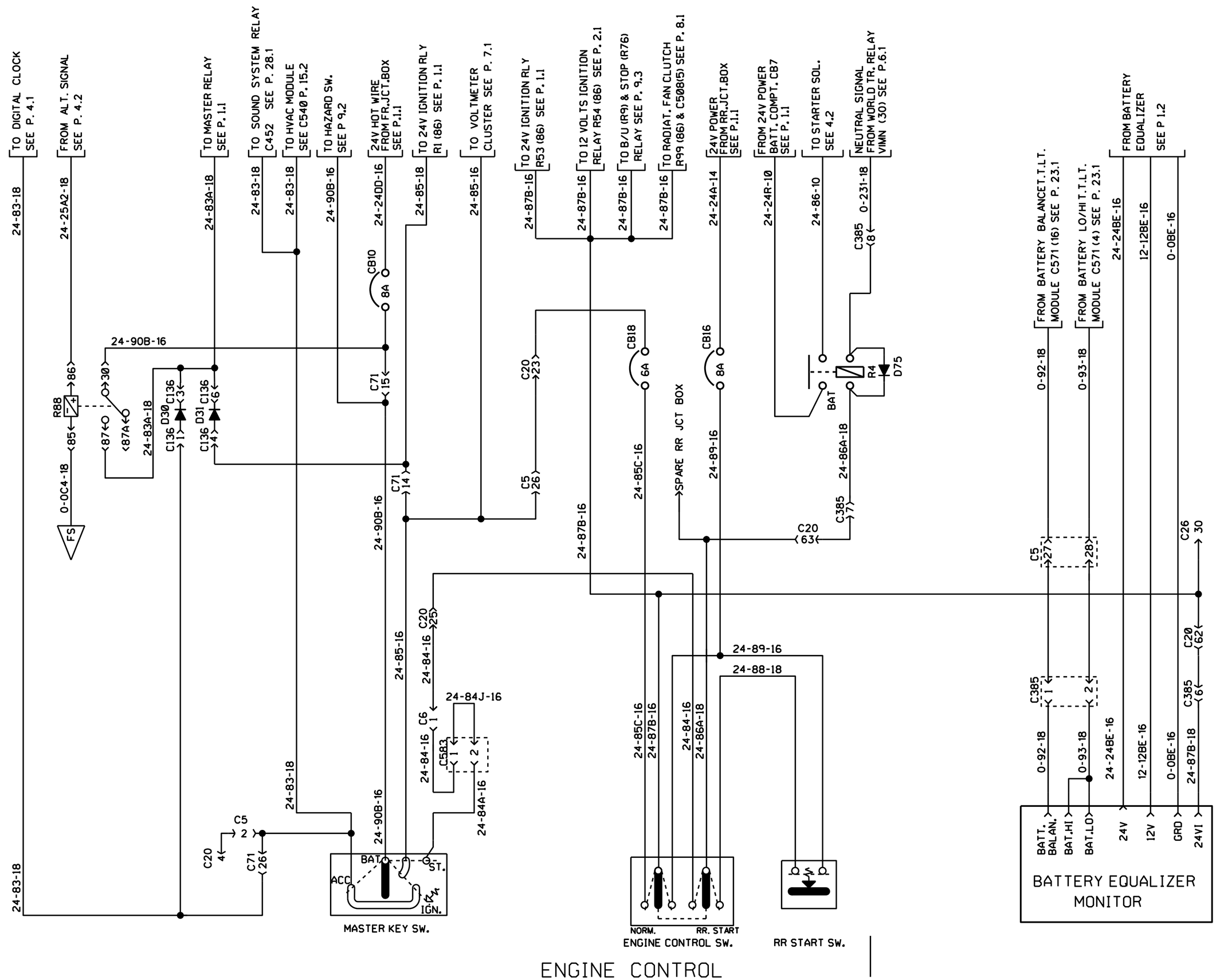

PREVOST	WIRING DIAGRAM	NO: D060993	PAGE: 4.1	REVISION 03

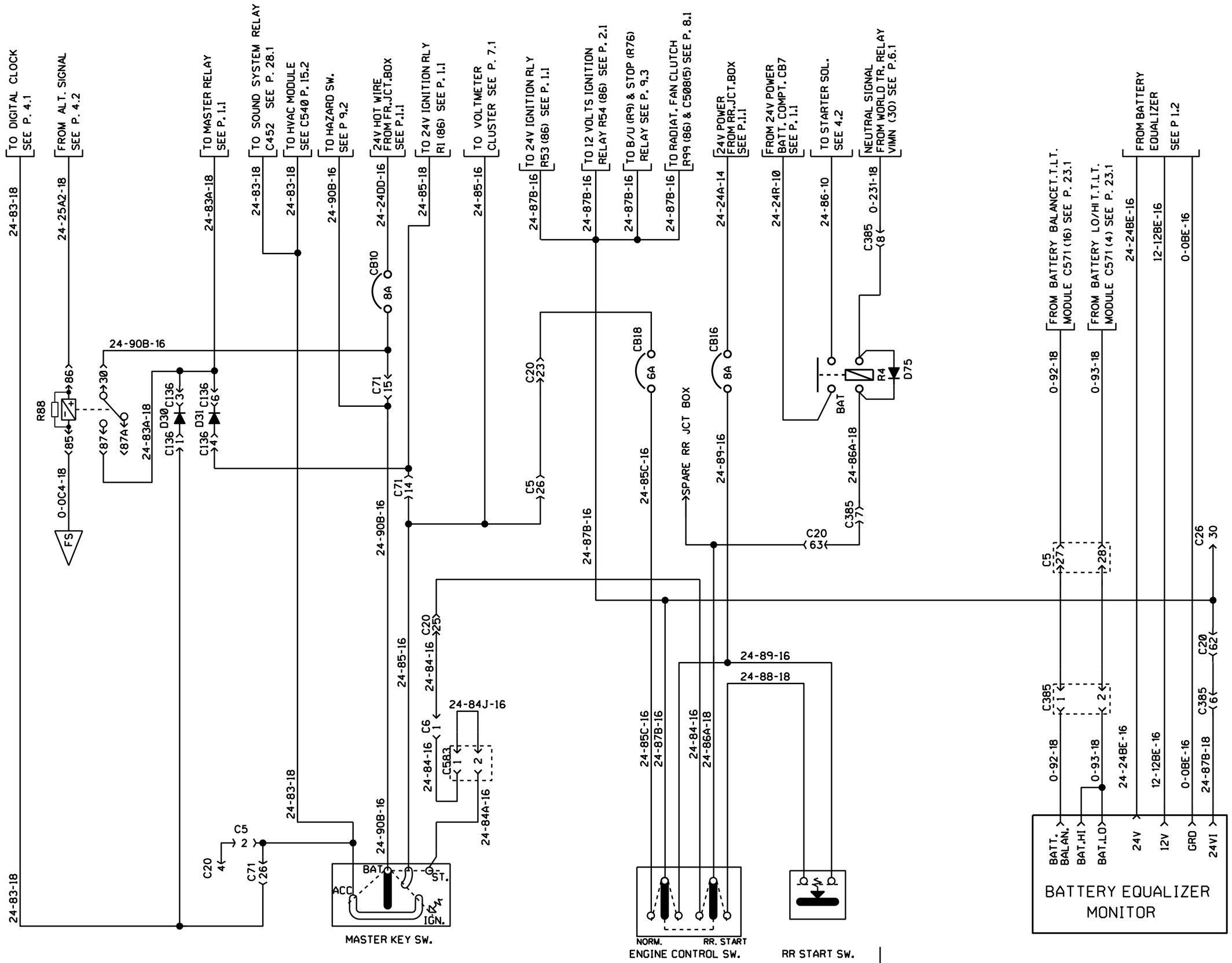

PREVOST	WIRING DIAGRAM	NO: D060993	PAGE: 4.1	REVISION 15

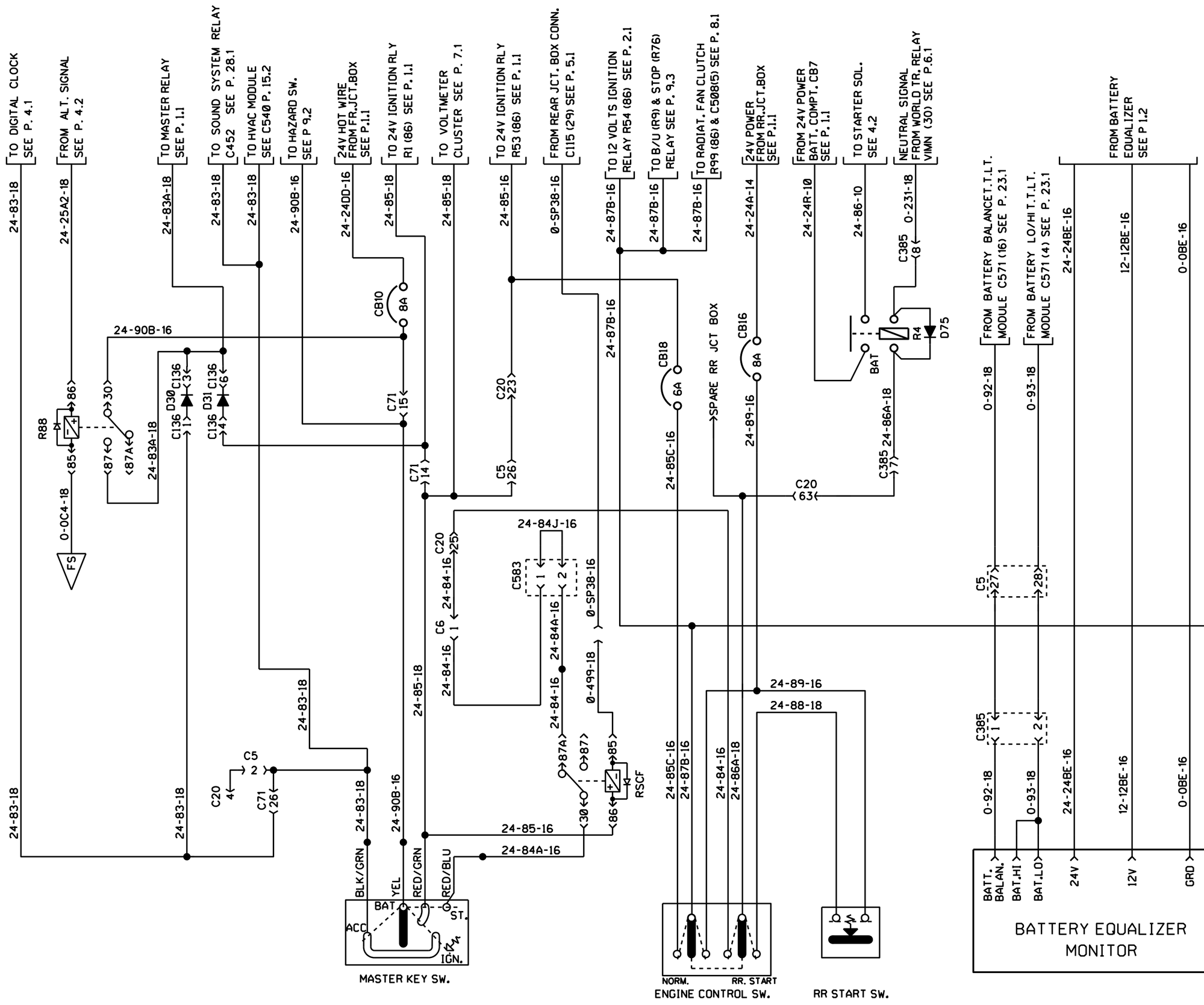

ENGINE CONTROL WITH FORD KEY

PREVOST	WIRING DIAGRAM	NO: D060993	PAGE: 4.1 sp1	REVISION 00

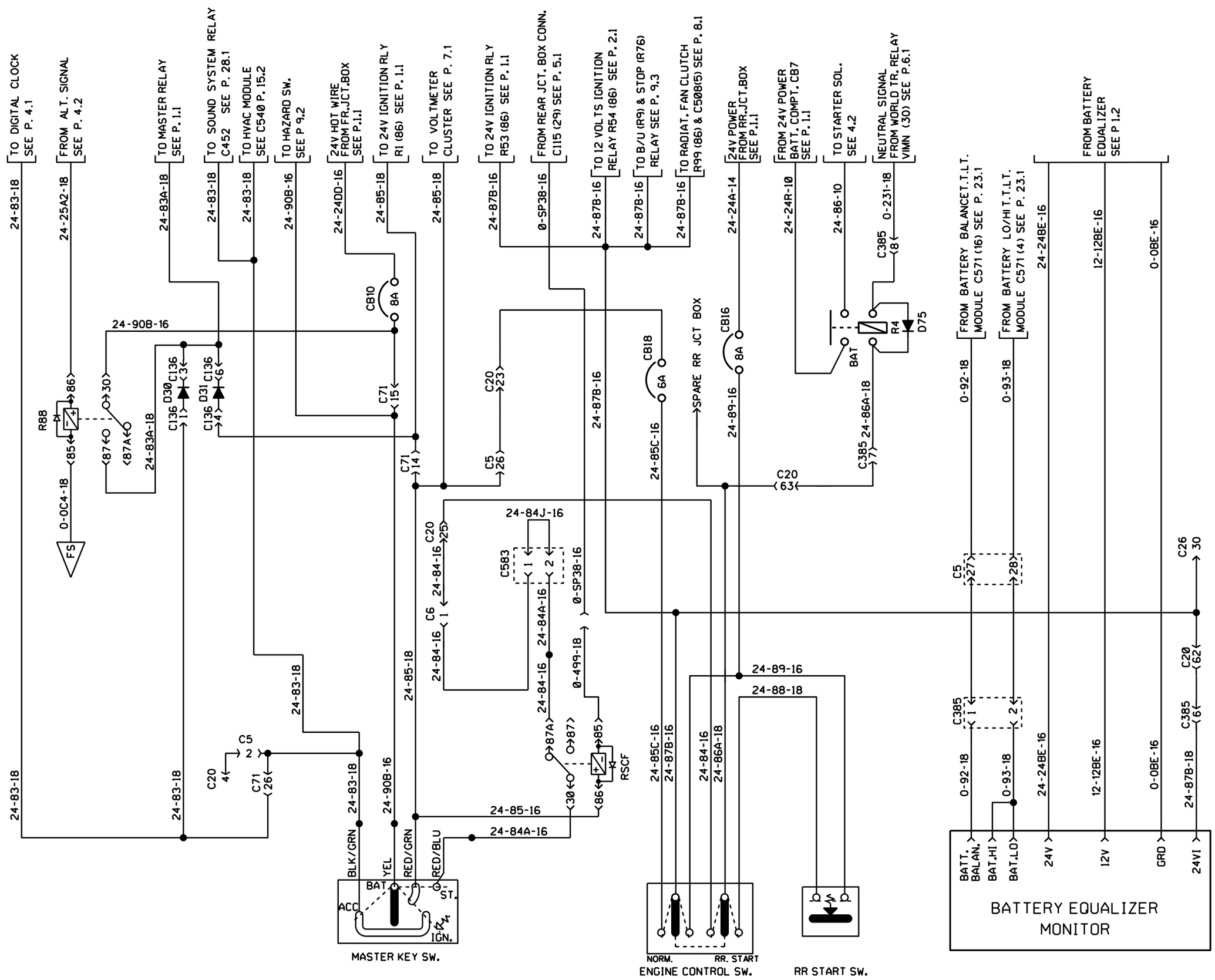

ENGINE CONTROL WITH FORD KEY

PREVOST	WIRING DIAGRAM	NO: D060993	PAGE: 4.1 sp1	REVISION 03

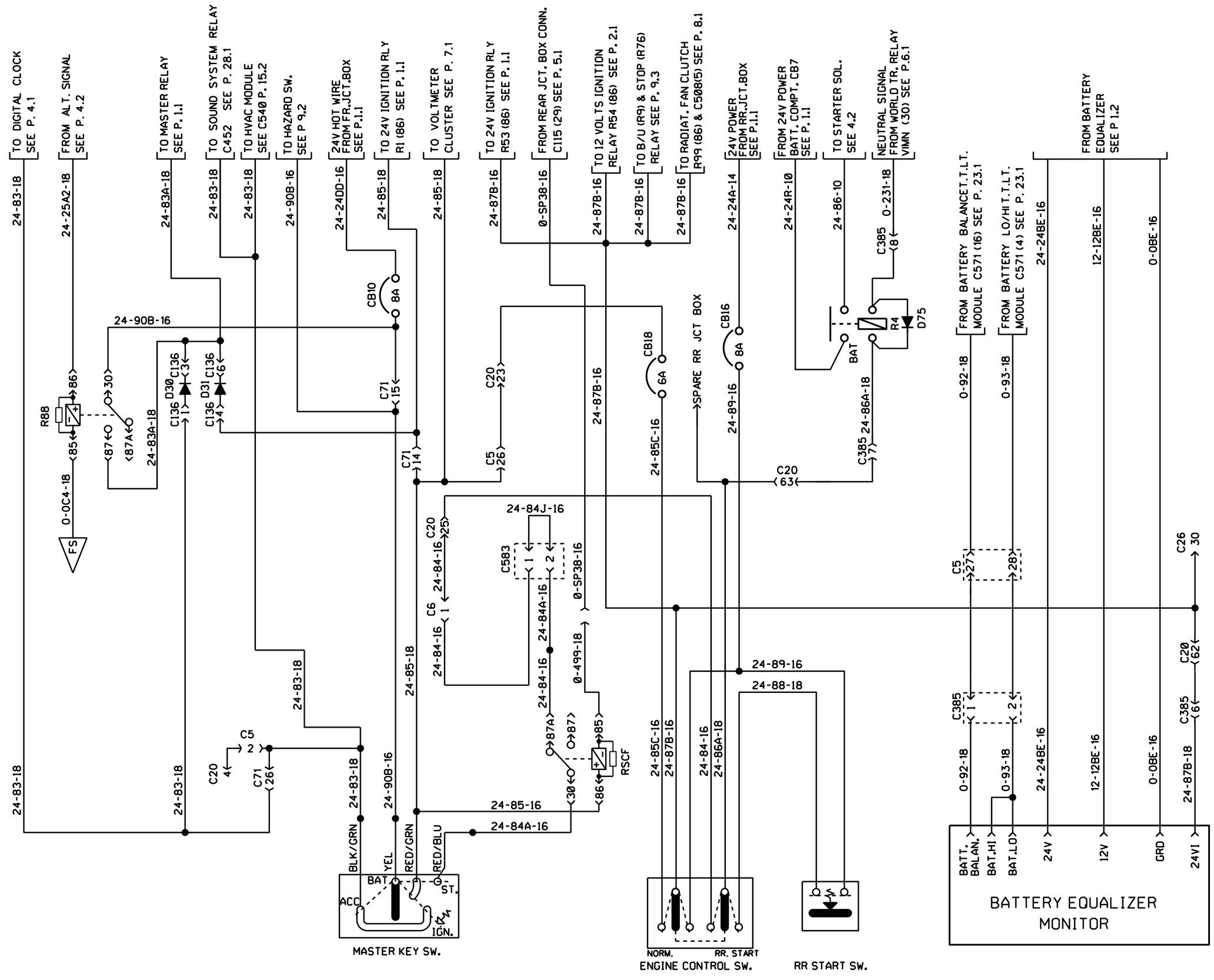

ENGINE CONTROL WITH FORD KEY

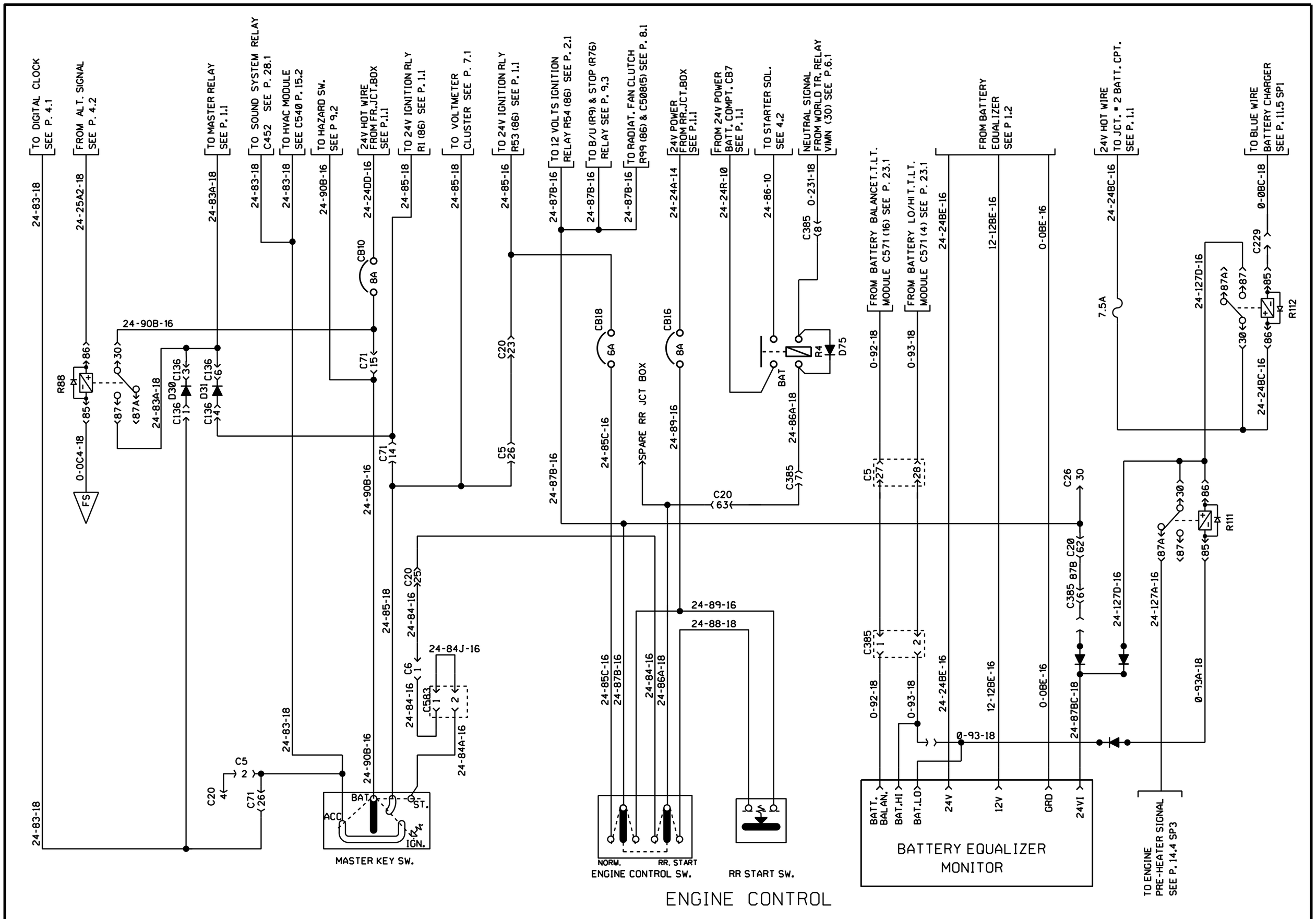

PREVOST	WIRING DIAGRAM	NO: D060993	PAGE: 4.1 sp2	REVISION 00

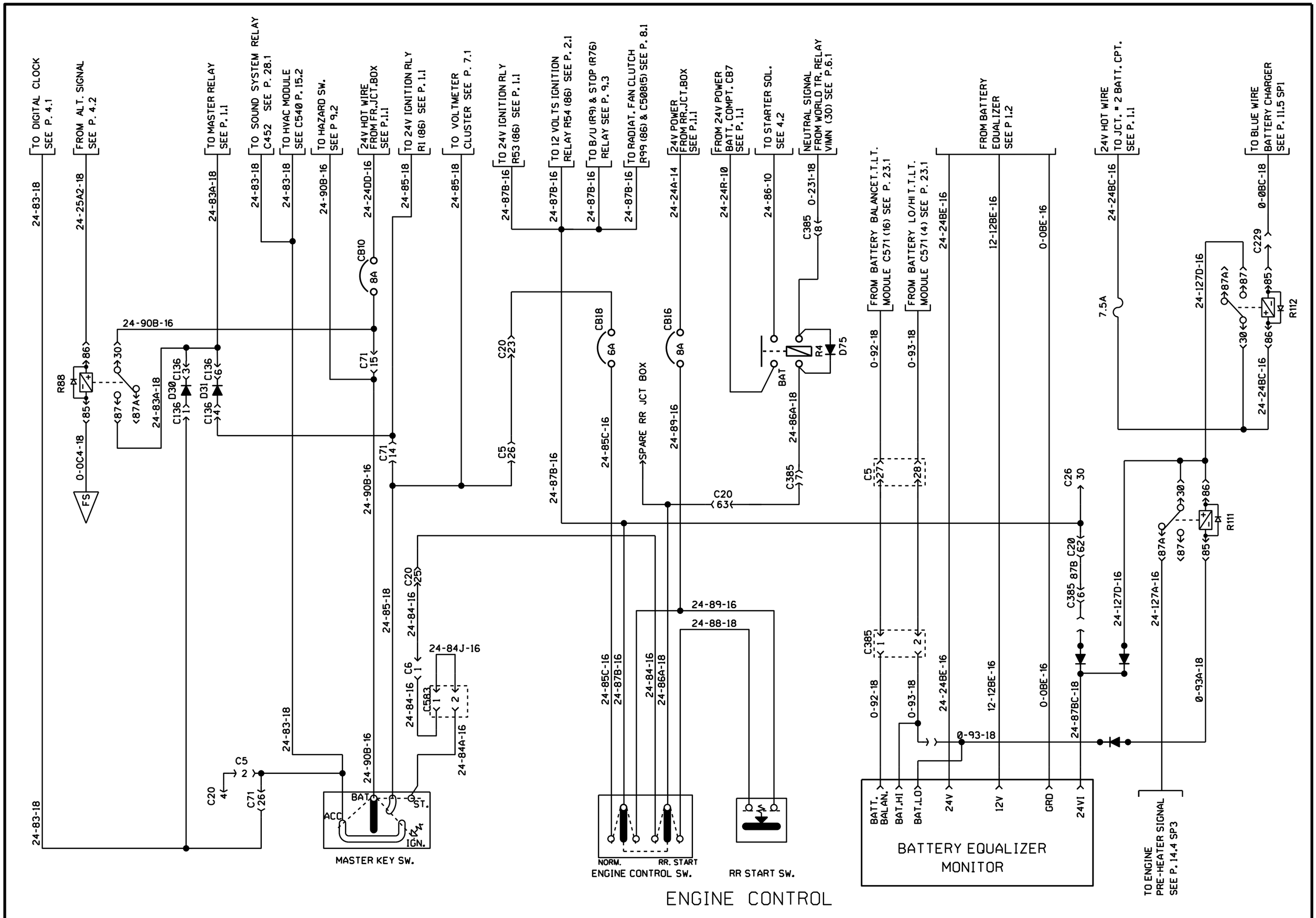

PREVOST	WIRING DIAGRAM	NO: D060993	PAGE: 4.1 sp2	REVISION 03

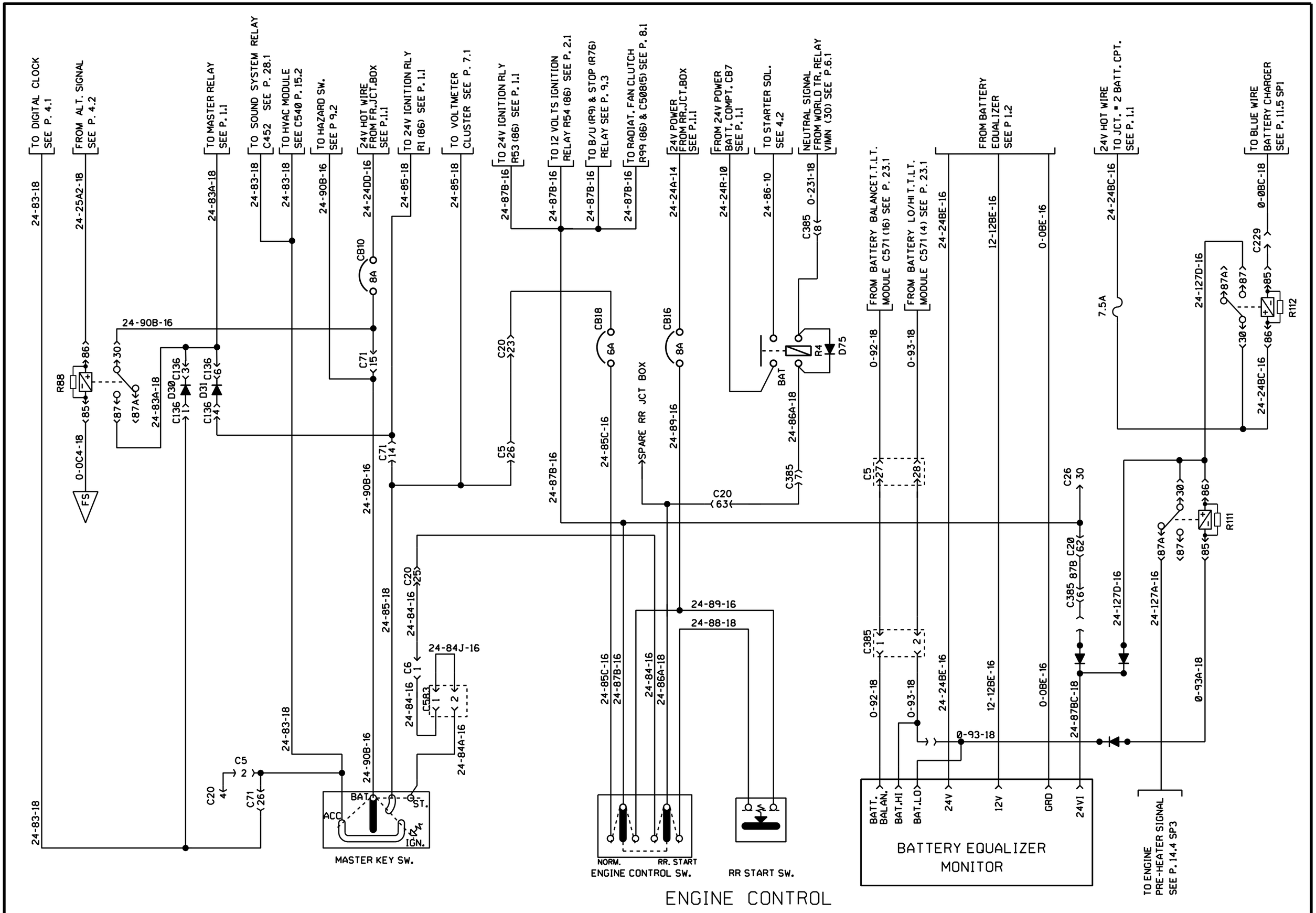

PREVOST	WIRING DIAGRAM	NO: D060993	PAGE: 4.1 sp2	REVISION 15

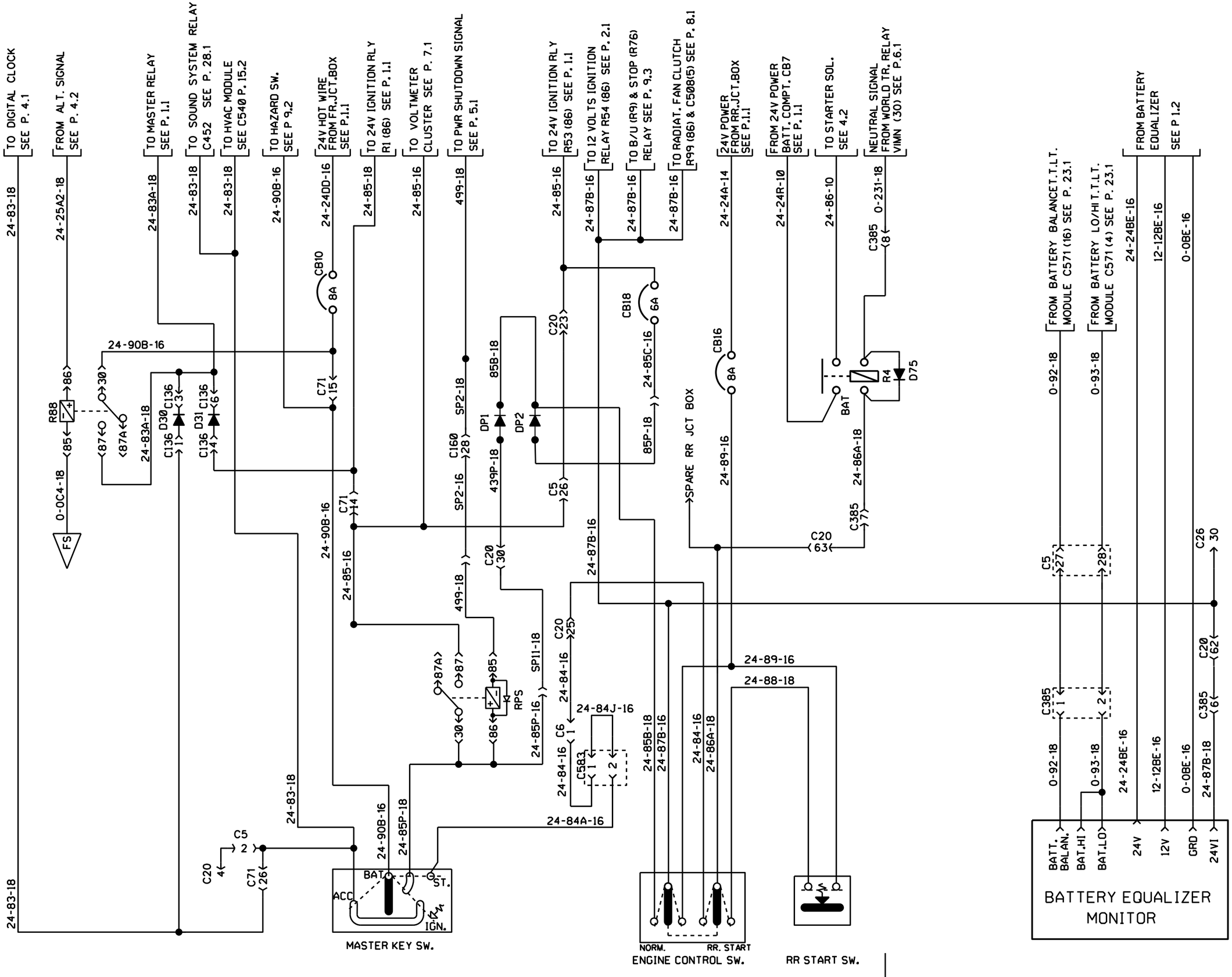

ENGINE CONTROL WITH POWER SHUDOWN & IDLER TIMER

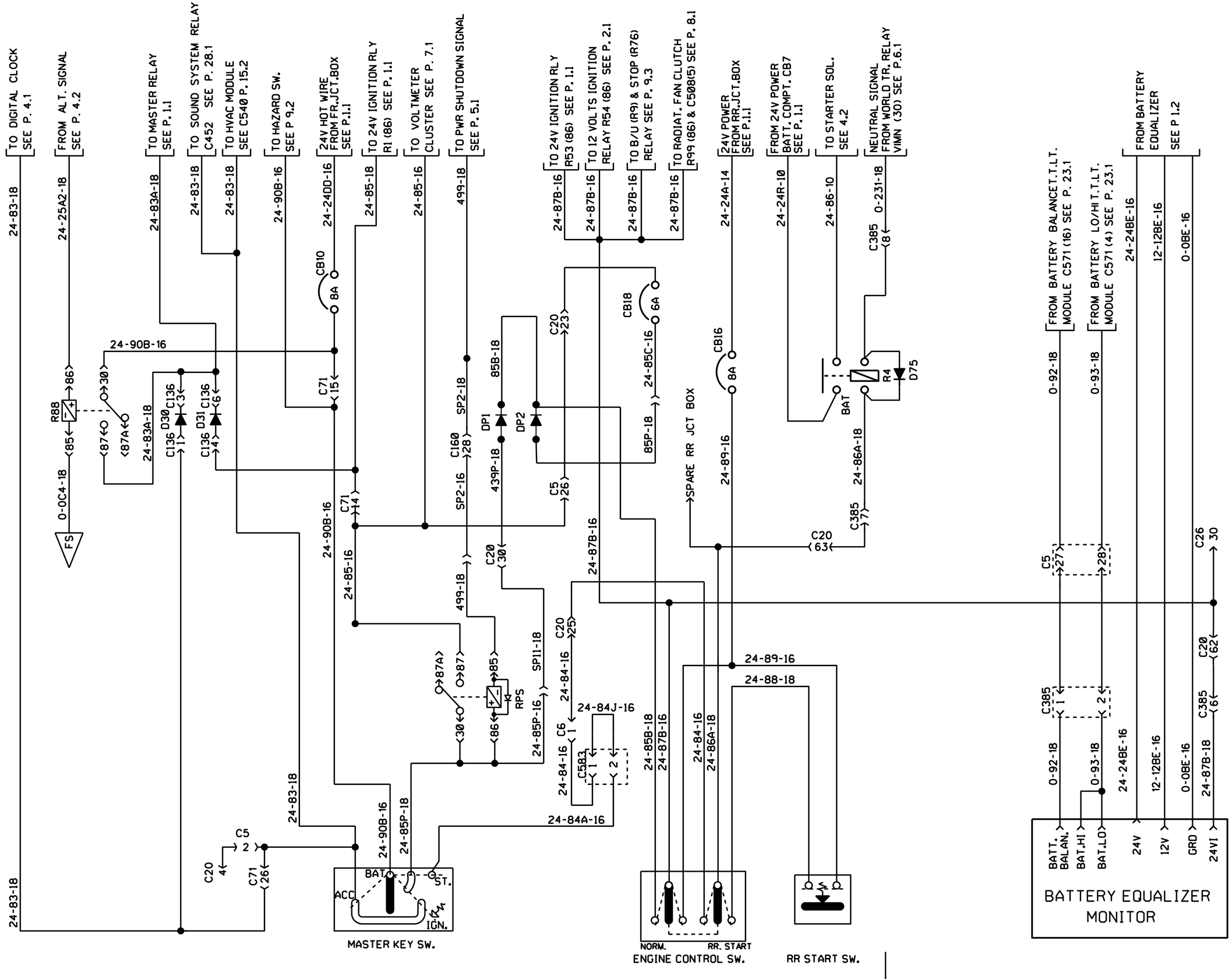

ENGINE CONTROL WITH POWER SHUDOWN & IDLER TIMER

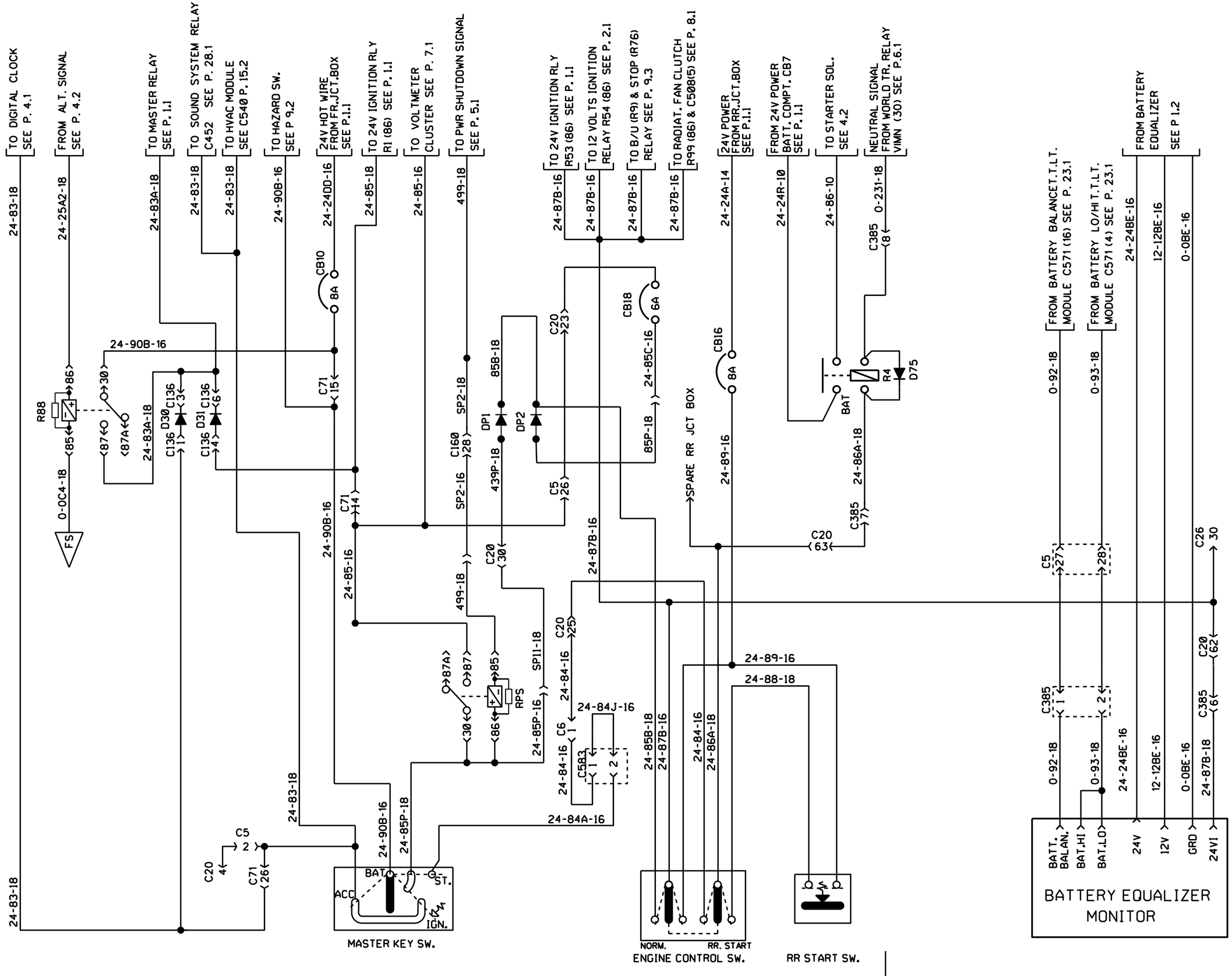

ENGINE CONTROL WITH POWER SHUDOWN & IDLER TIMER

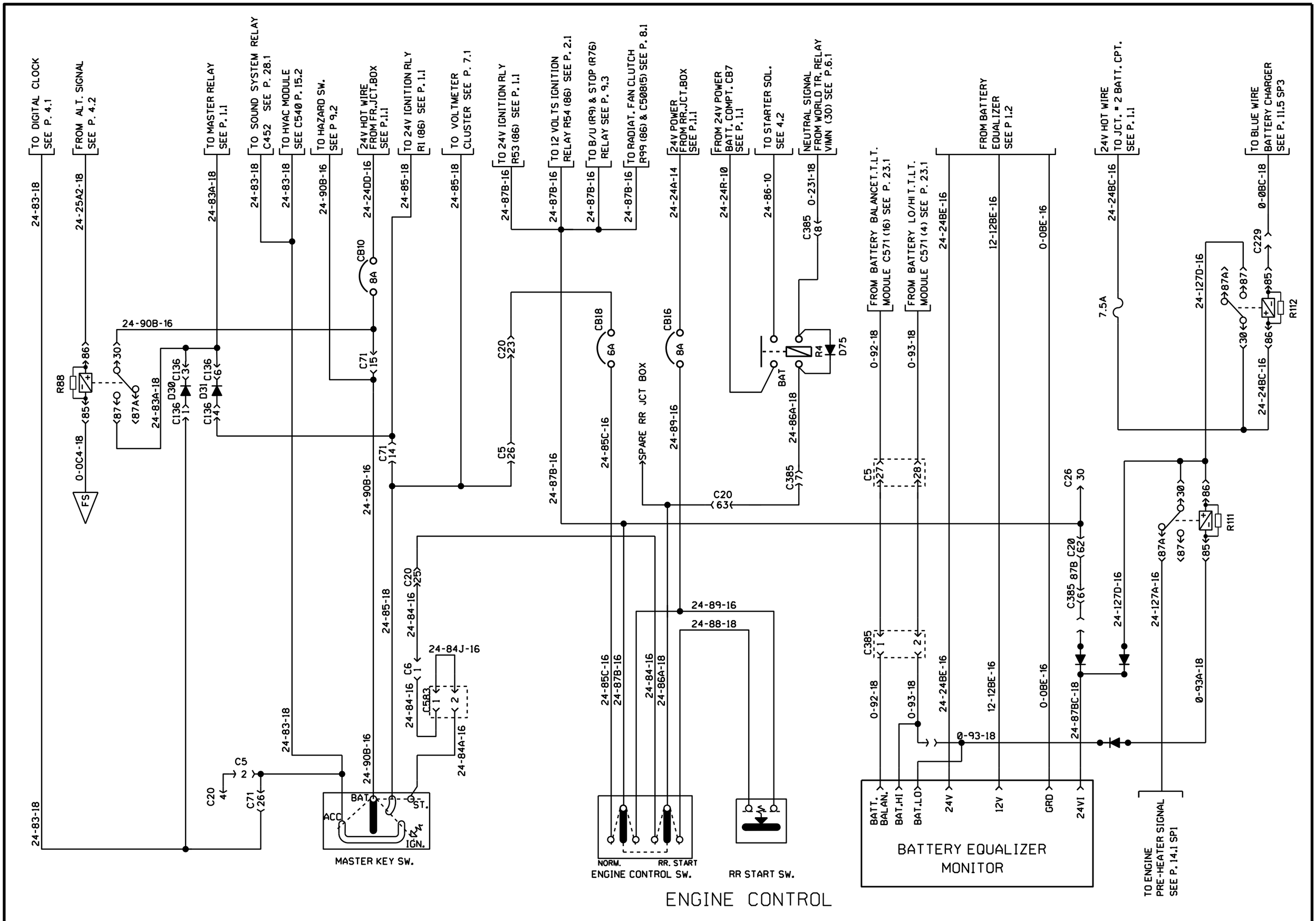

PREVOST	WIRING DIAGRAM	NO: D060993	PAGE: 4.1 sp4	REVISION 00

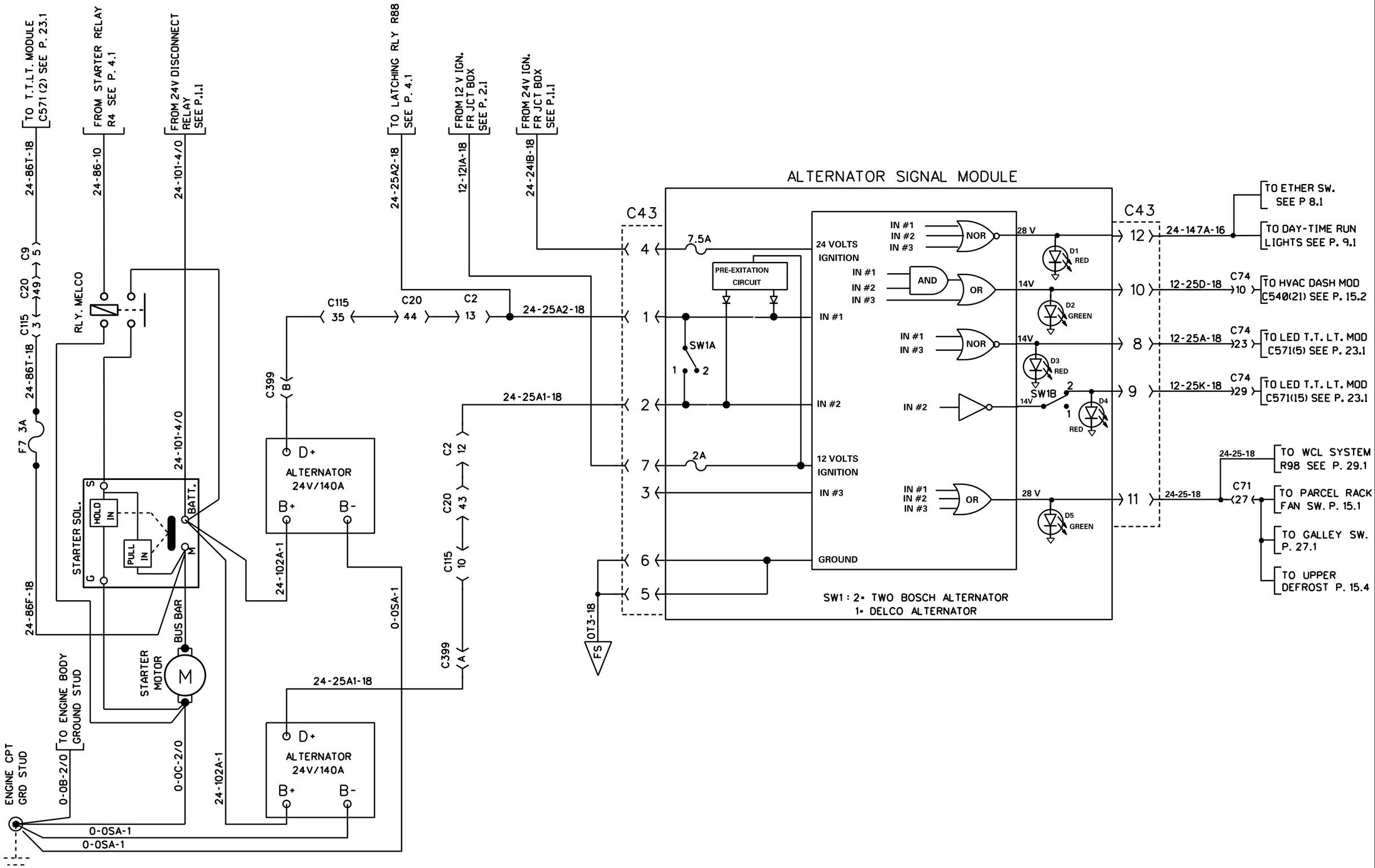

STARTER | DUAL BOSCH ALTERNATOR

PREVOST	WIRING DIAGRAM	NO: D060993	PAGE: 4.2	REVISION 00

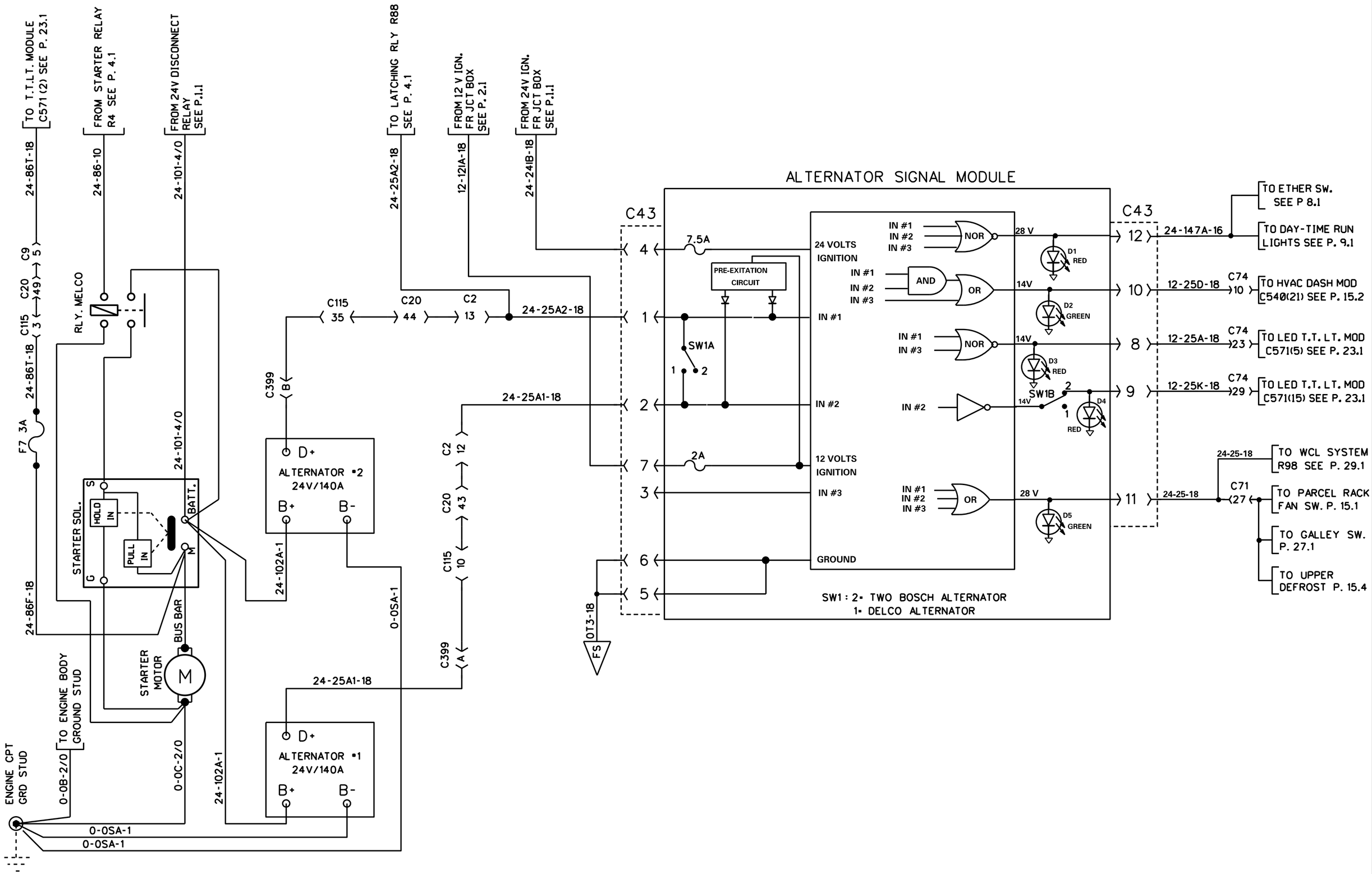

STARTER | DUAL BOSCH ALTERNATOR

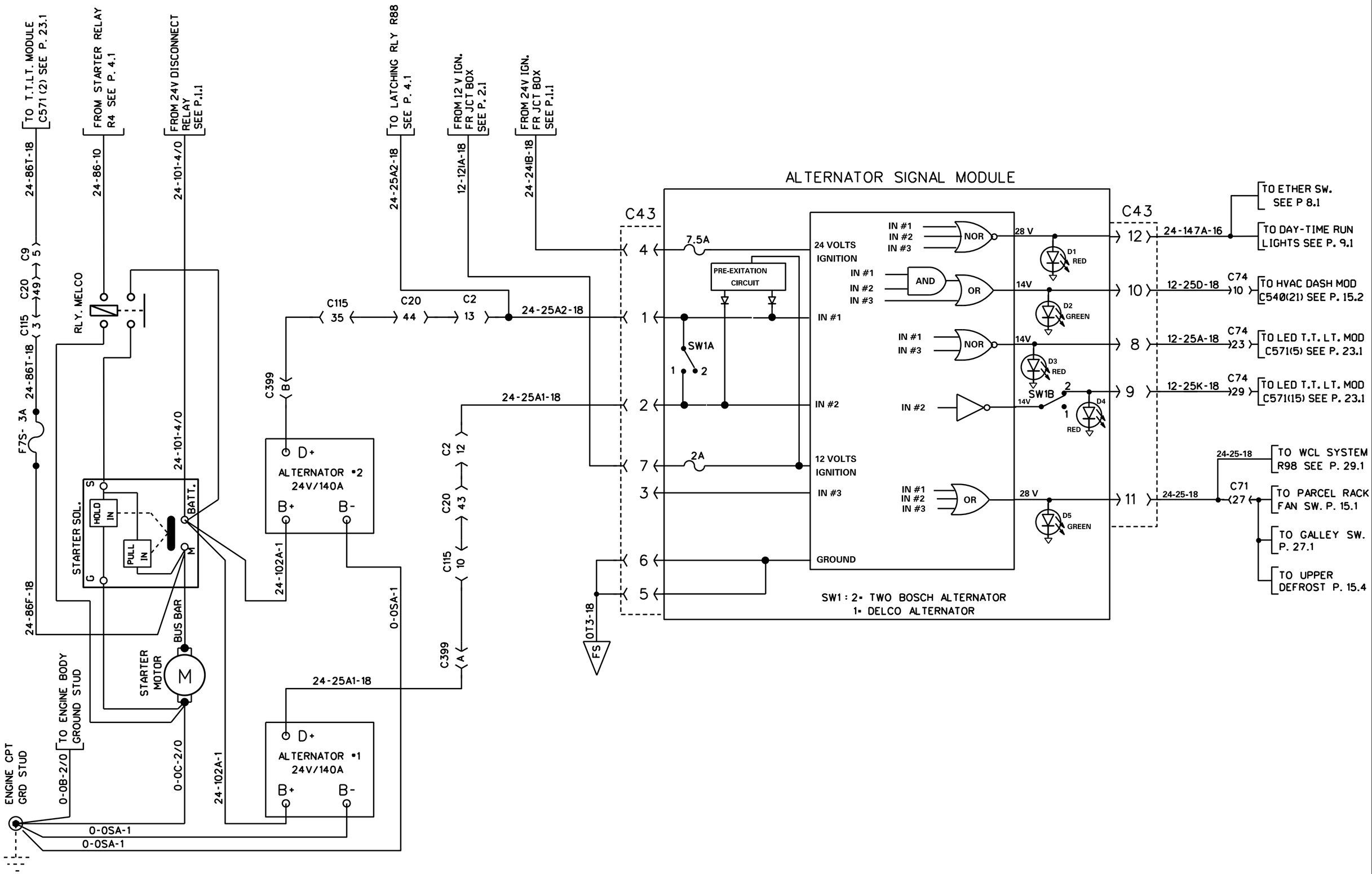

STARTER | DUAL BOSCH ALTERNATOR

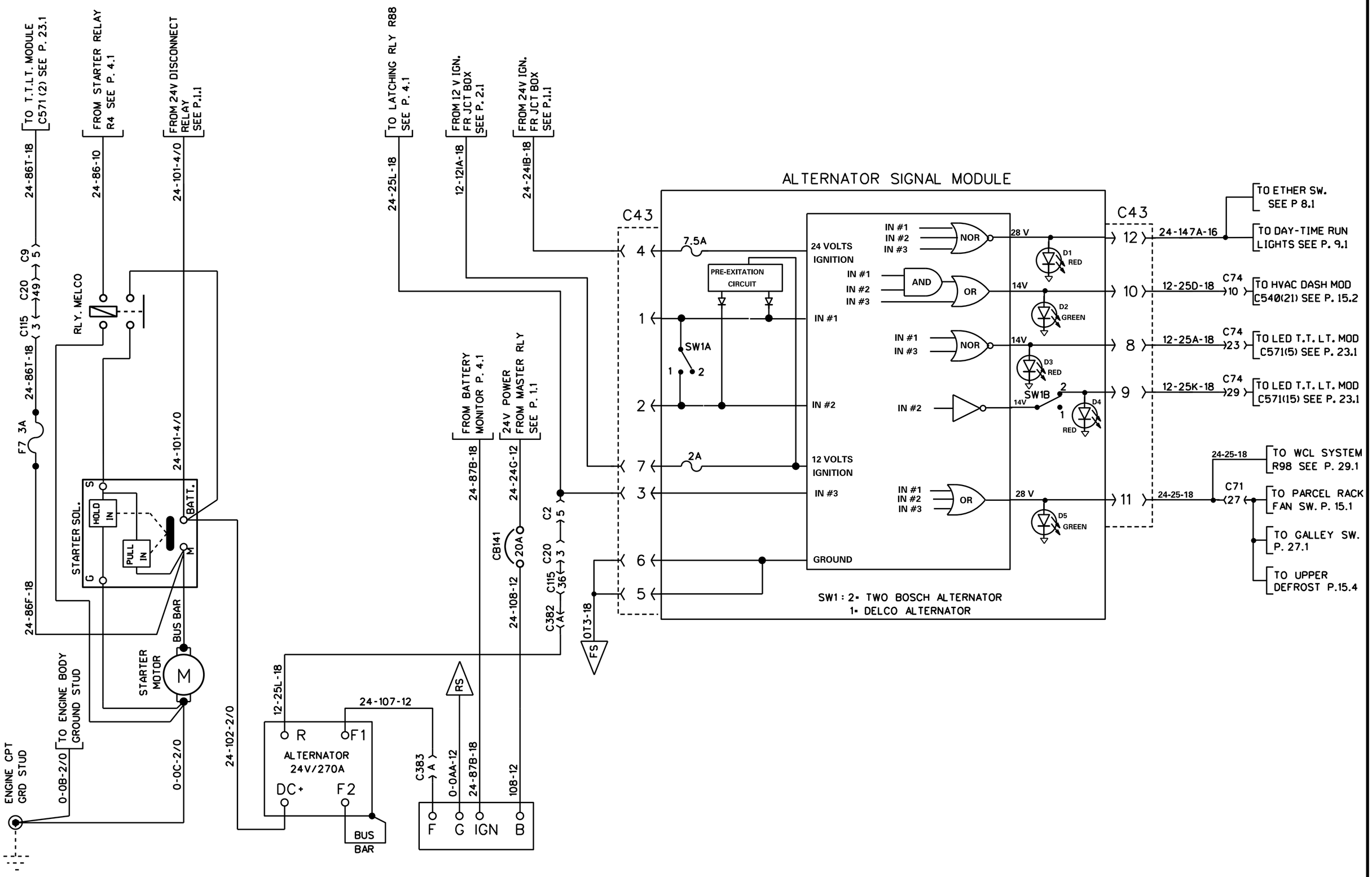

STARTER | DELCO ALTERNATOR

PREVOST	WIRING DIAGRAM	NO: D060993	PAGE: 4.2SP1	REVISION 00

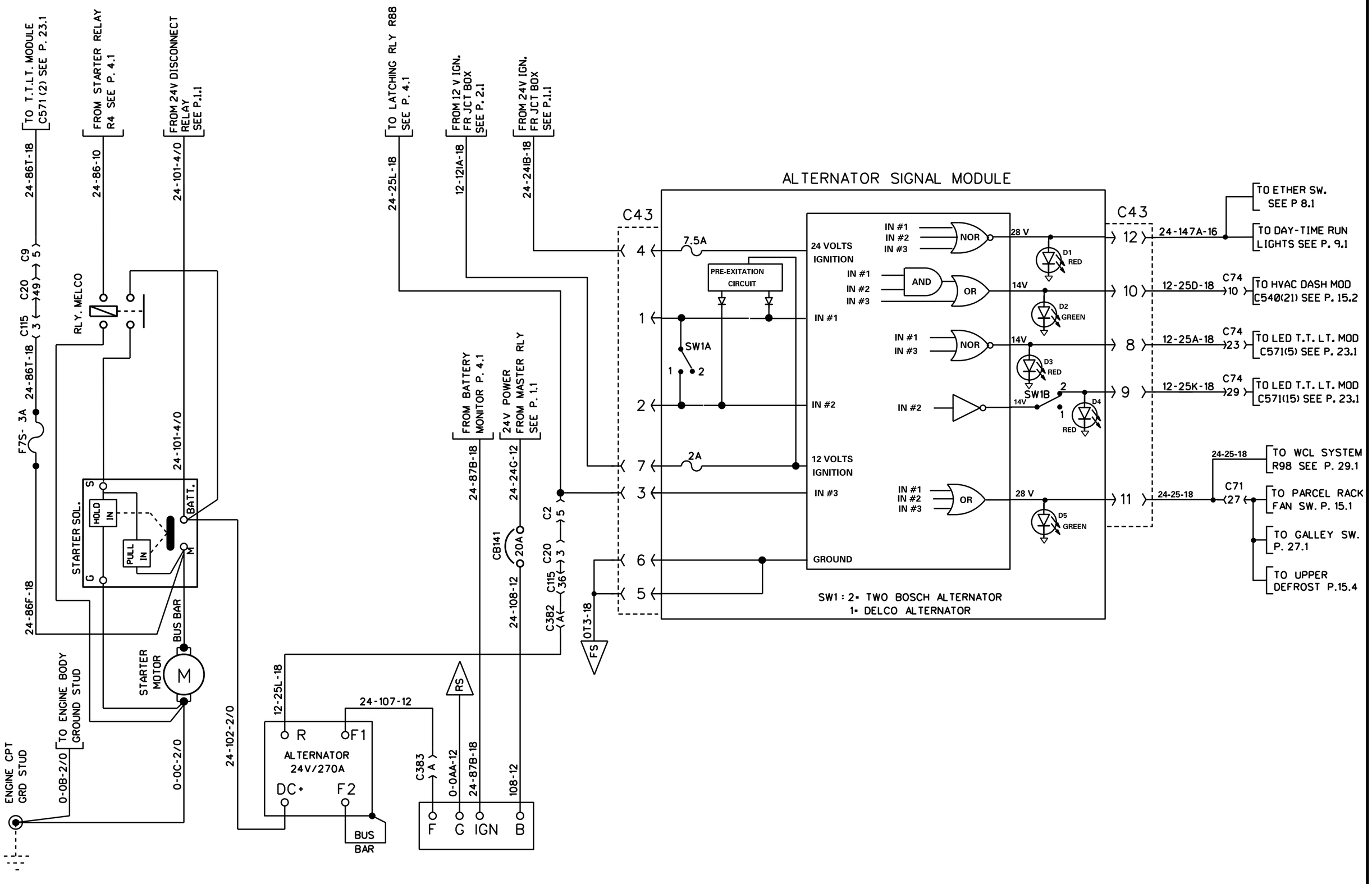

STARTER | DELCO ALTERNATOR

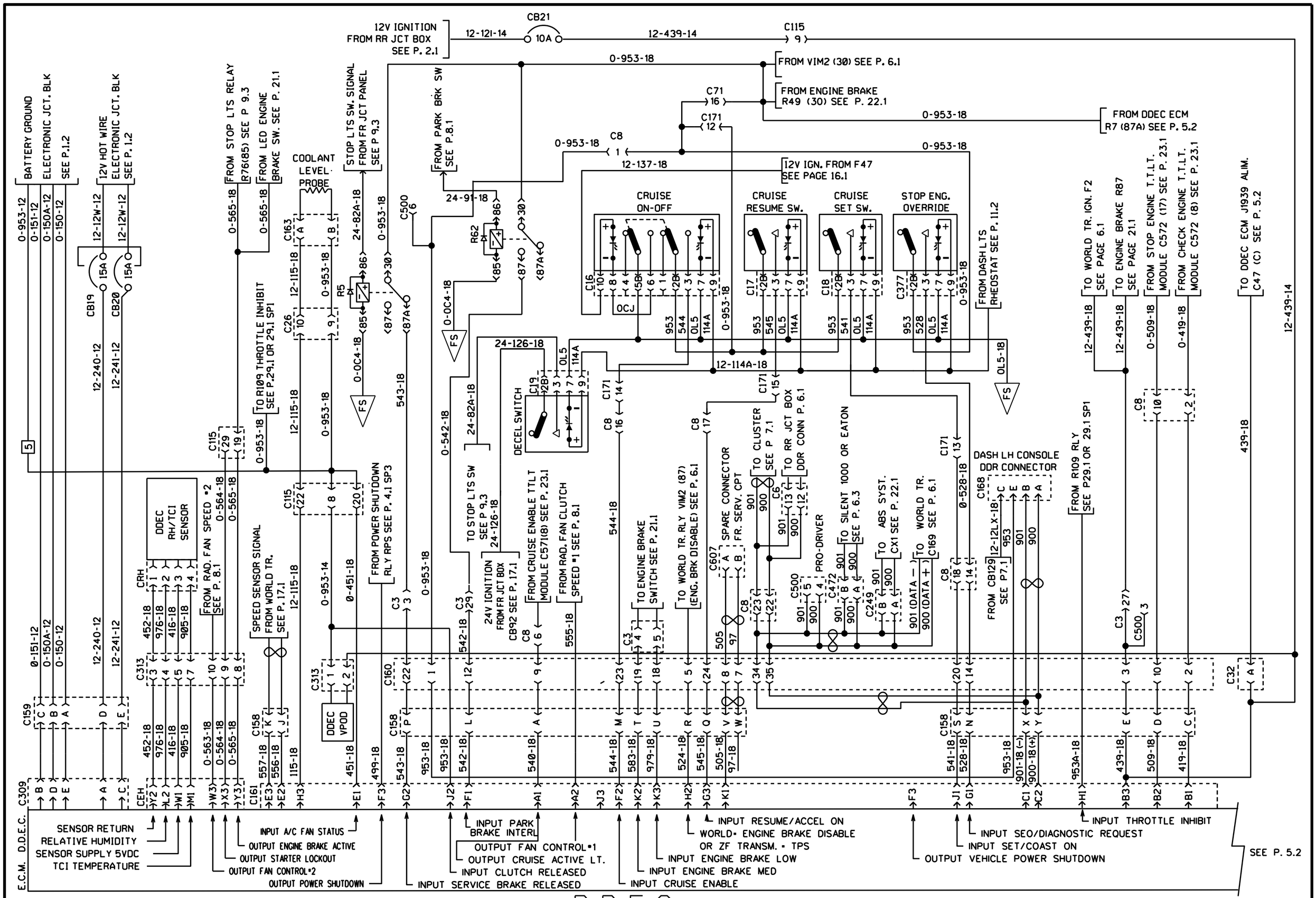

D.D.E.C.

PREVOST	WIRING DIAGRAM	NO: D060993	PAGE: 5.1	REVISION 00

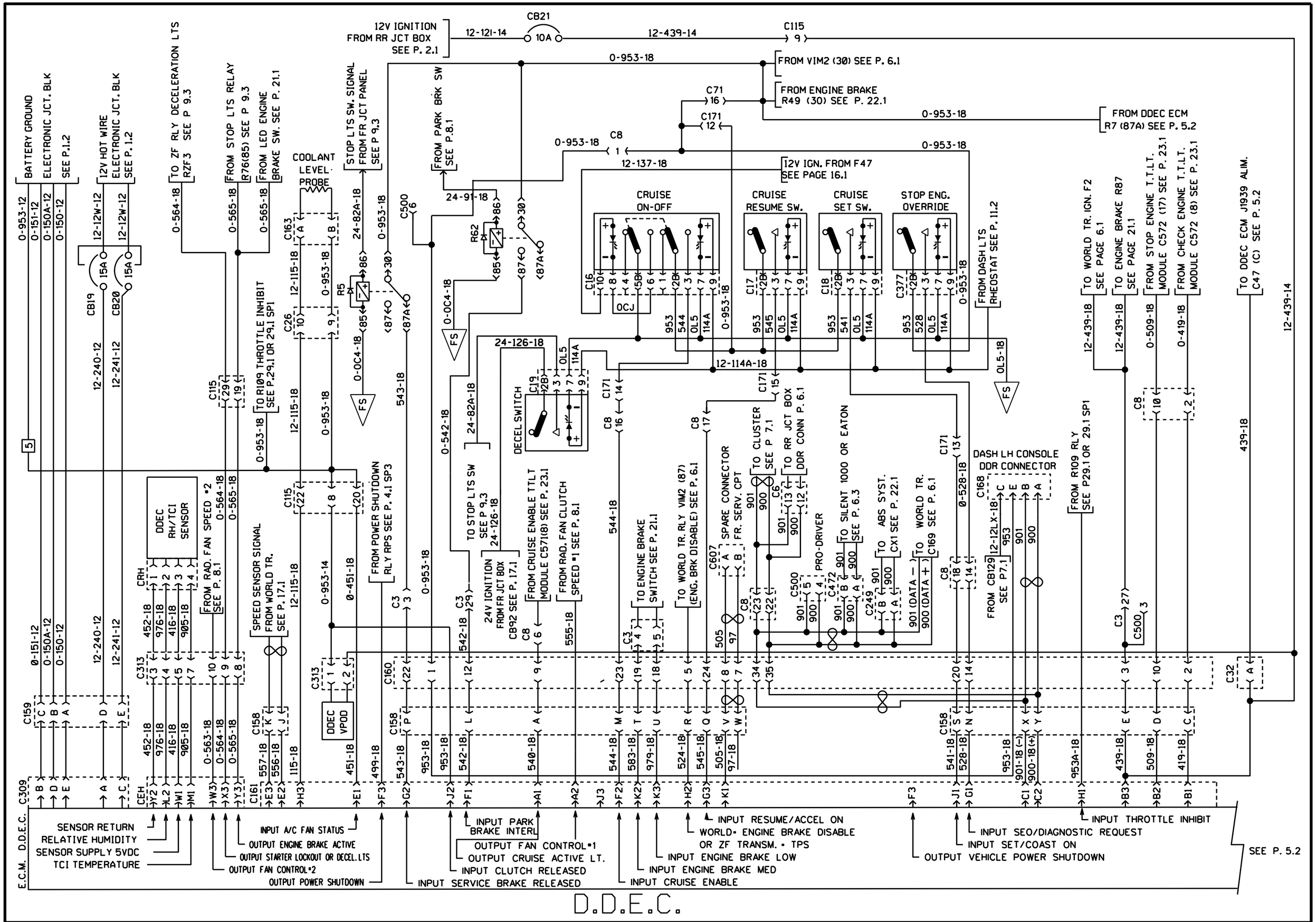

D.D.E.C.

PREVOST	WIRING DIAGRAM	NO: D060993	PAGE: 5.1	REVISION 01

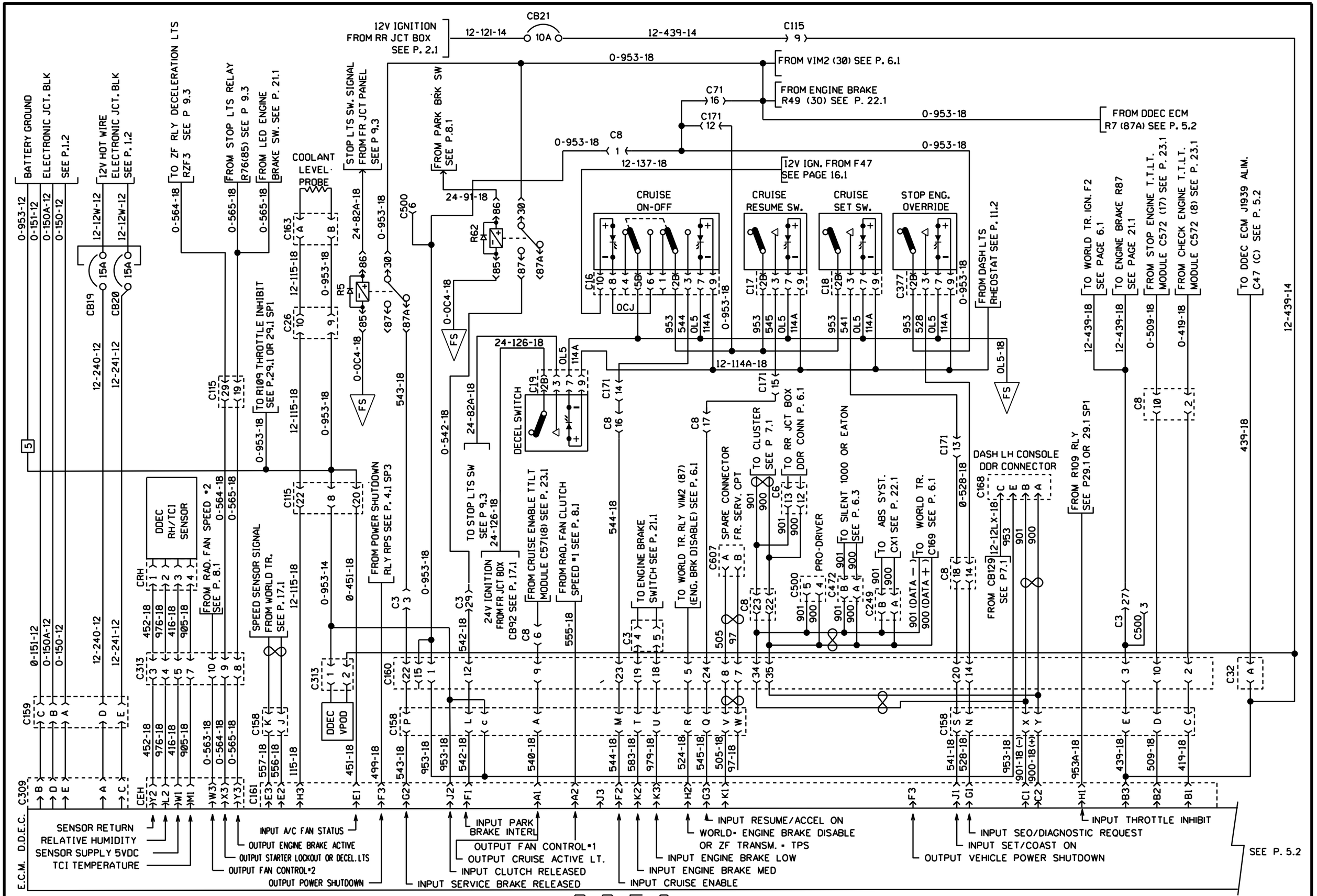

D.D.E.C.

PREVOST	WIRING DIAGRAM	NO: D060993	PAGE: 5.1	REVISION 03

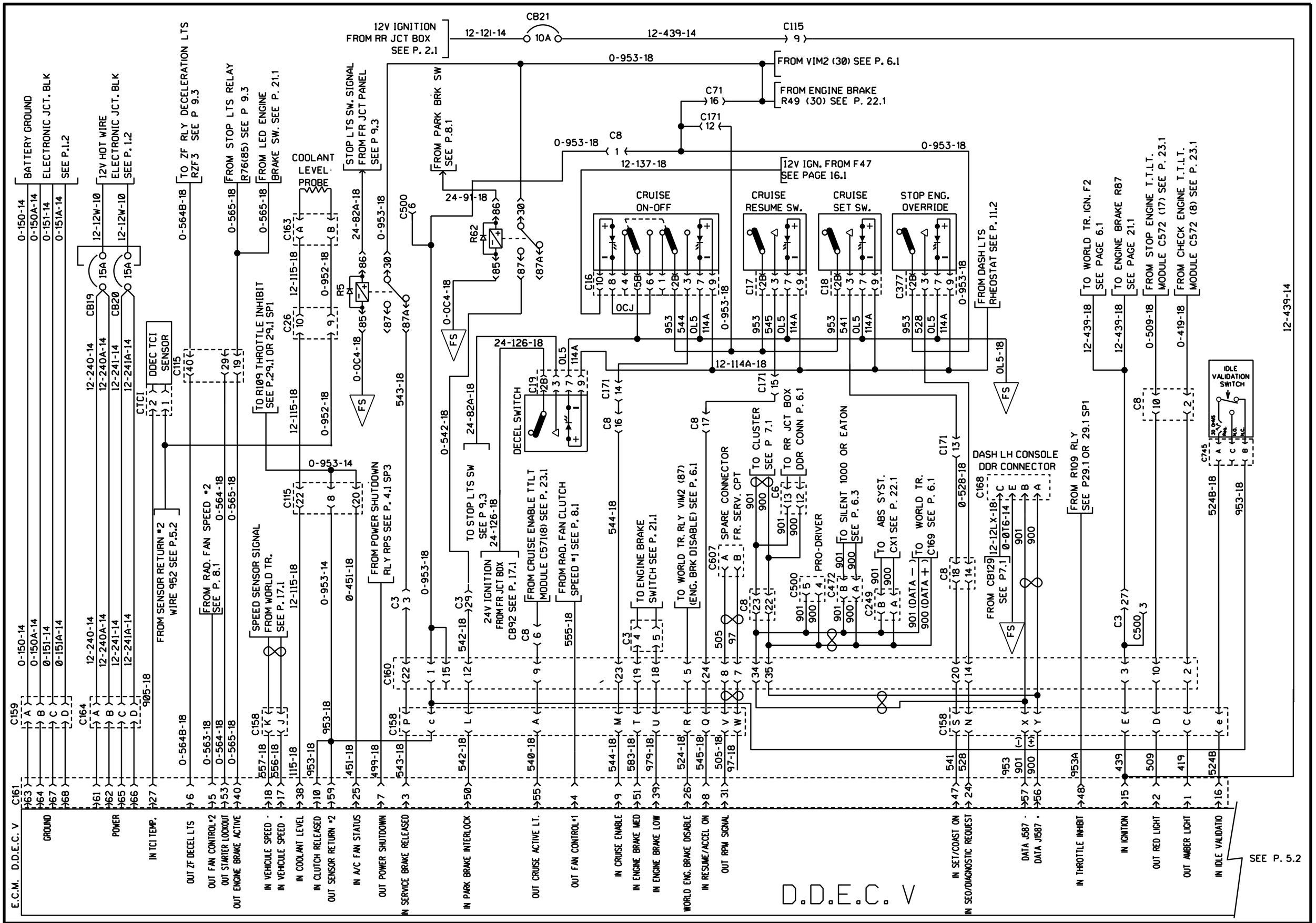

PREVOST | WIRING DIAGRAM | NO: D060993 | PAGE: 5.1 | REVISION 08

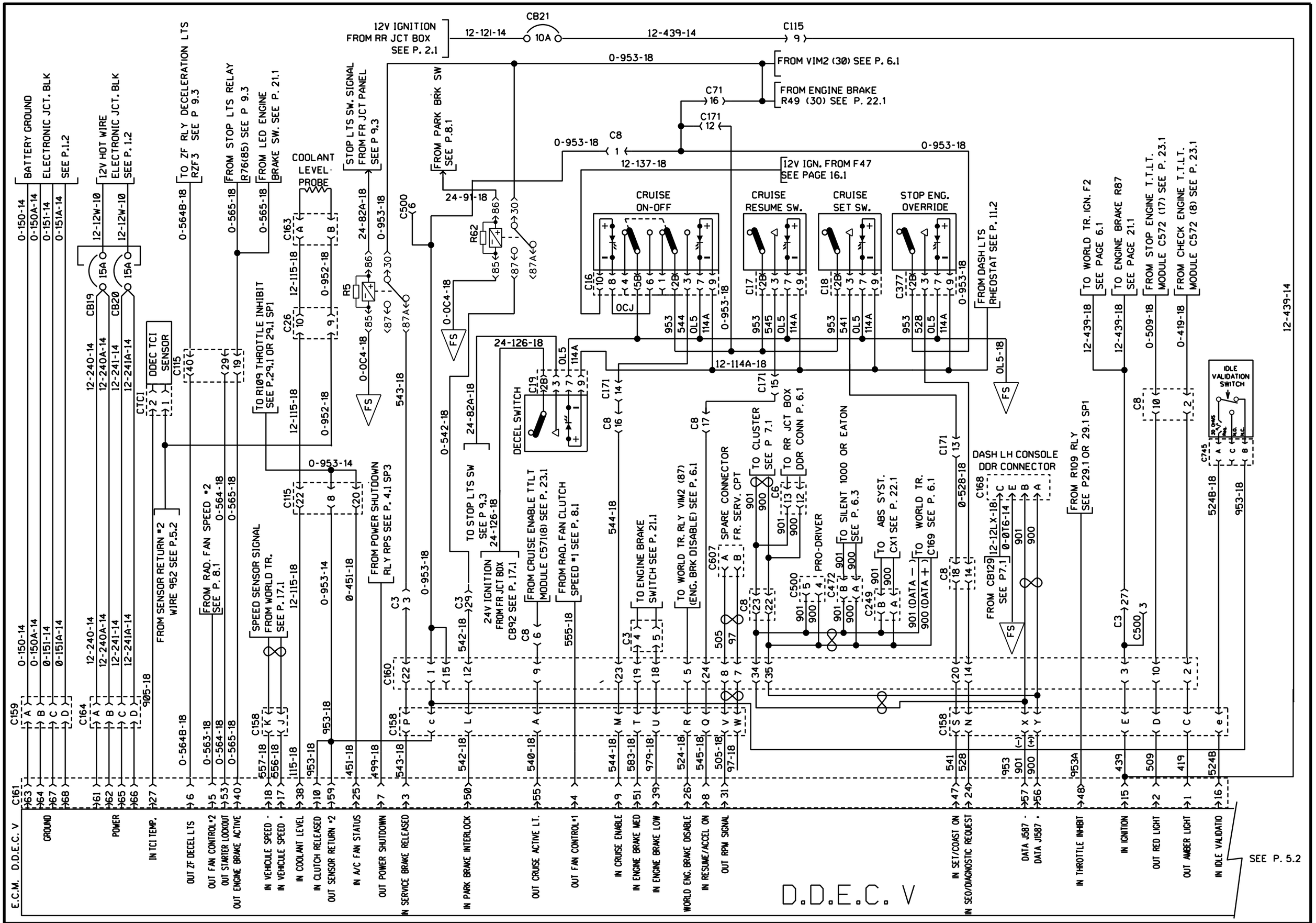

PREVOST	WIRING DIAGRAM	NO: D060993	PAGE: 5.1	REVISION 15

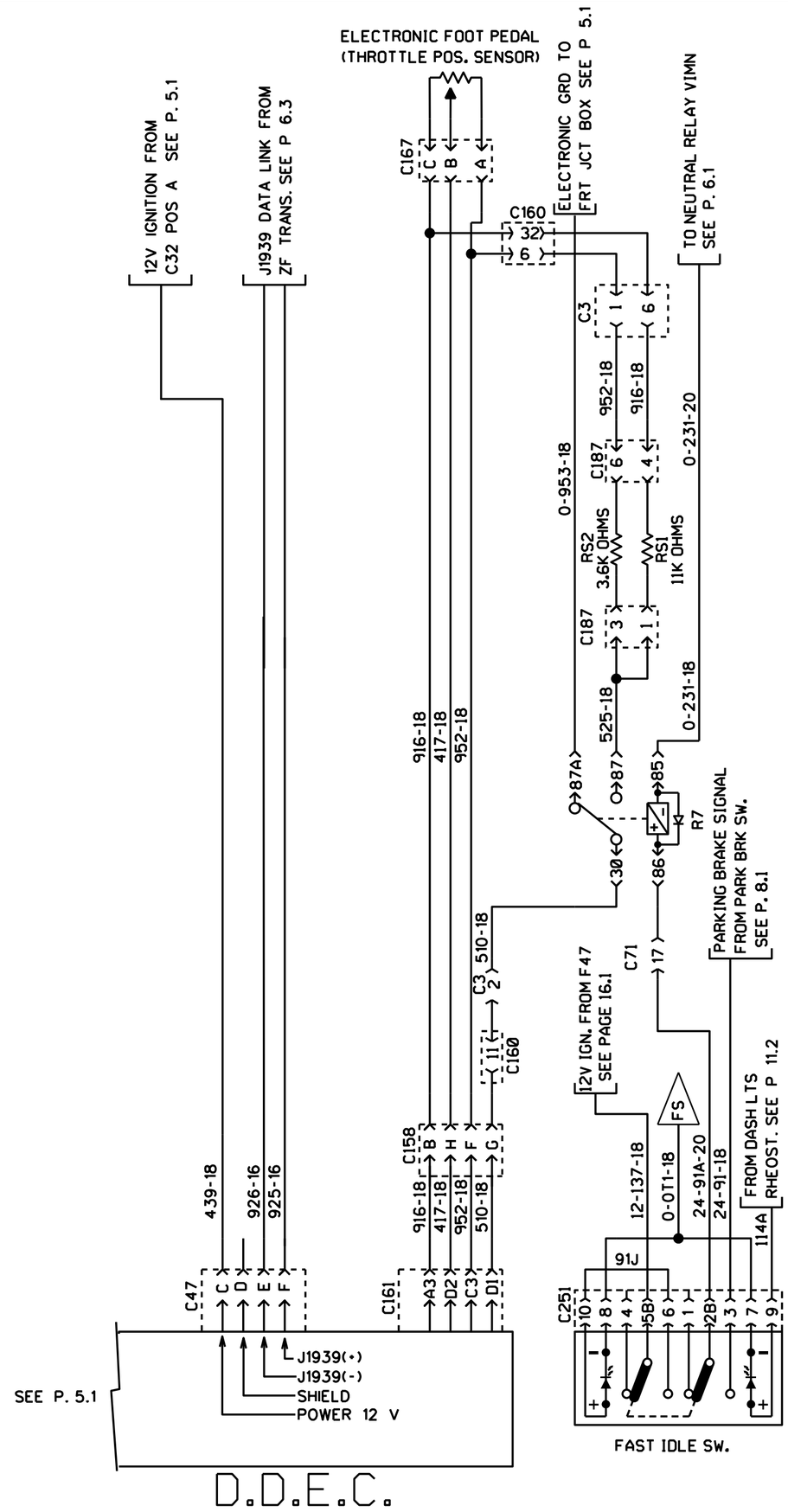

PREVOST	WIRING DIAGRAM	NO: D060993	PAGE: 5.2	REVISION 00

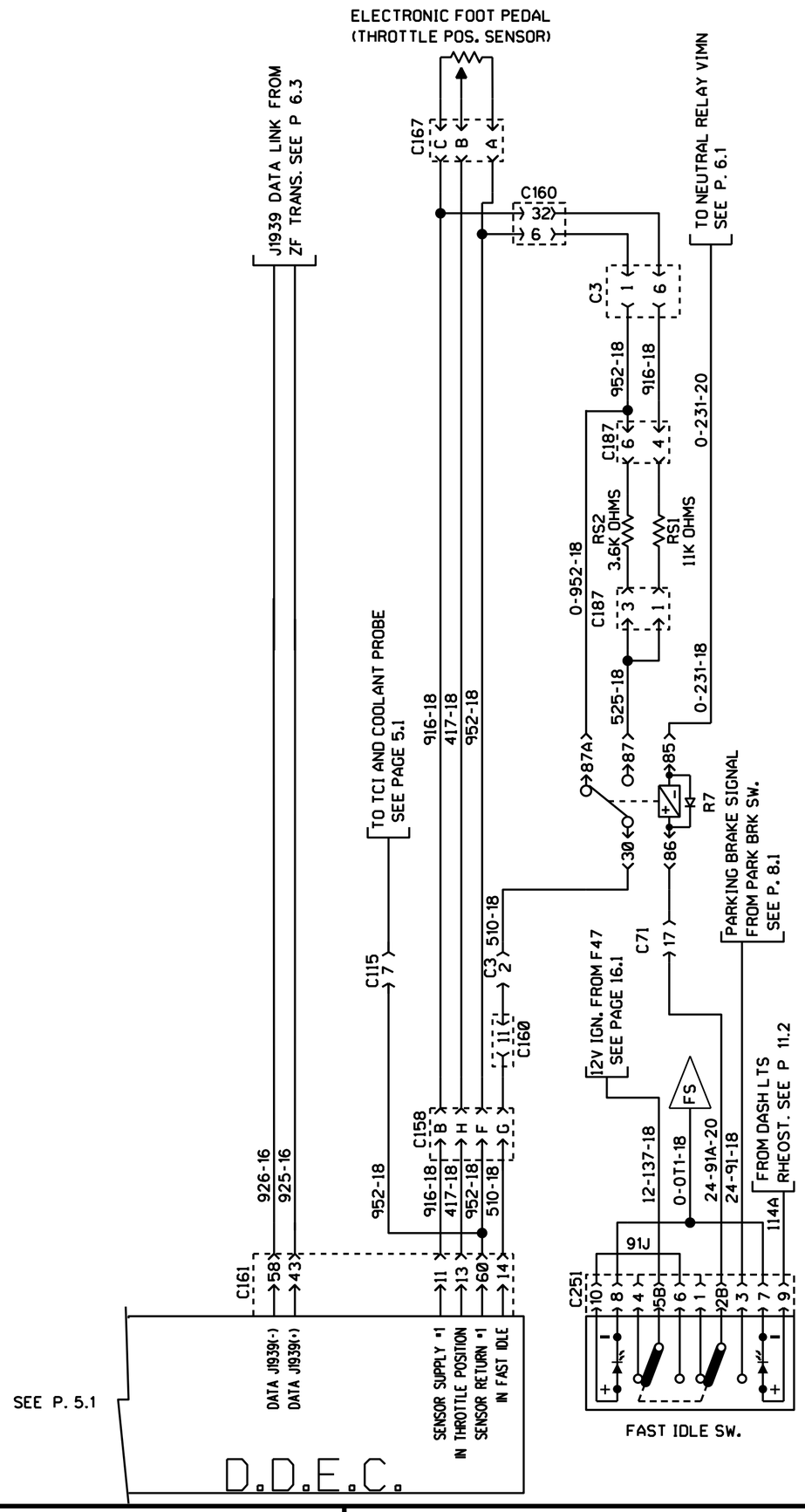

PREVOST	WIRING DIAGRAM	NO: D060993	PAGE: 5.2	REVISION 08

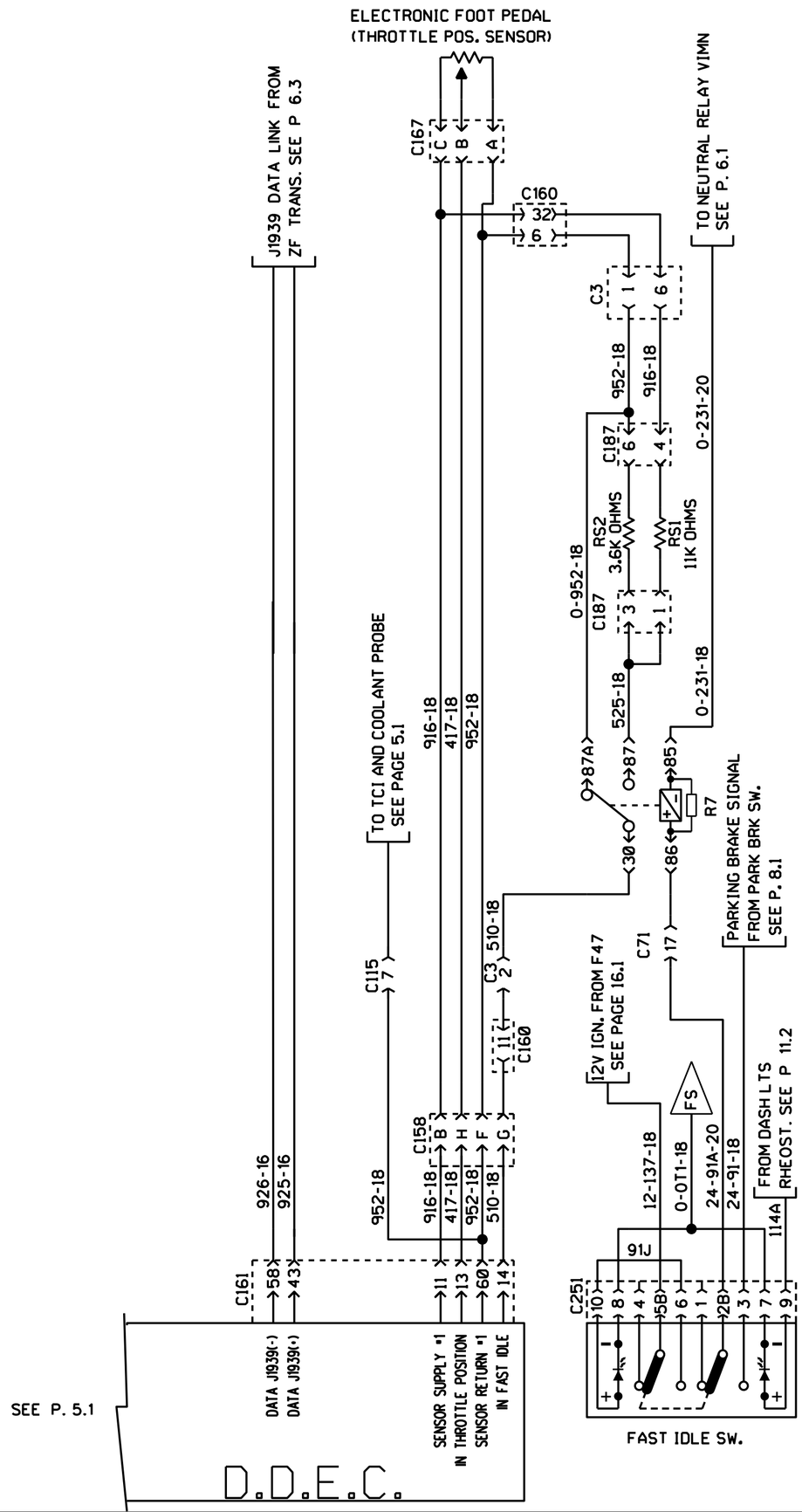

PREVOST	WIRING DIAGRAM	NO: D060993	PAGE: 5.2	REVISION 15

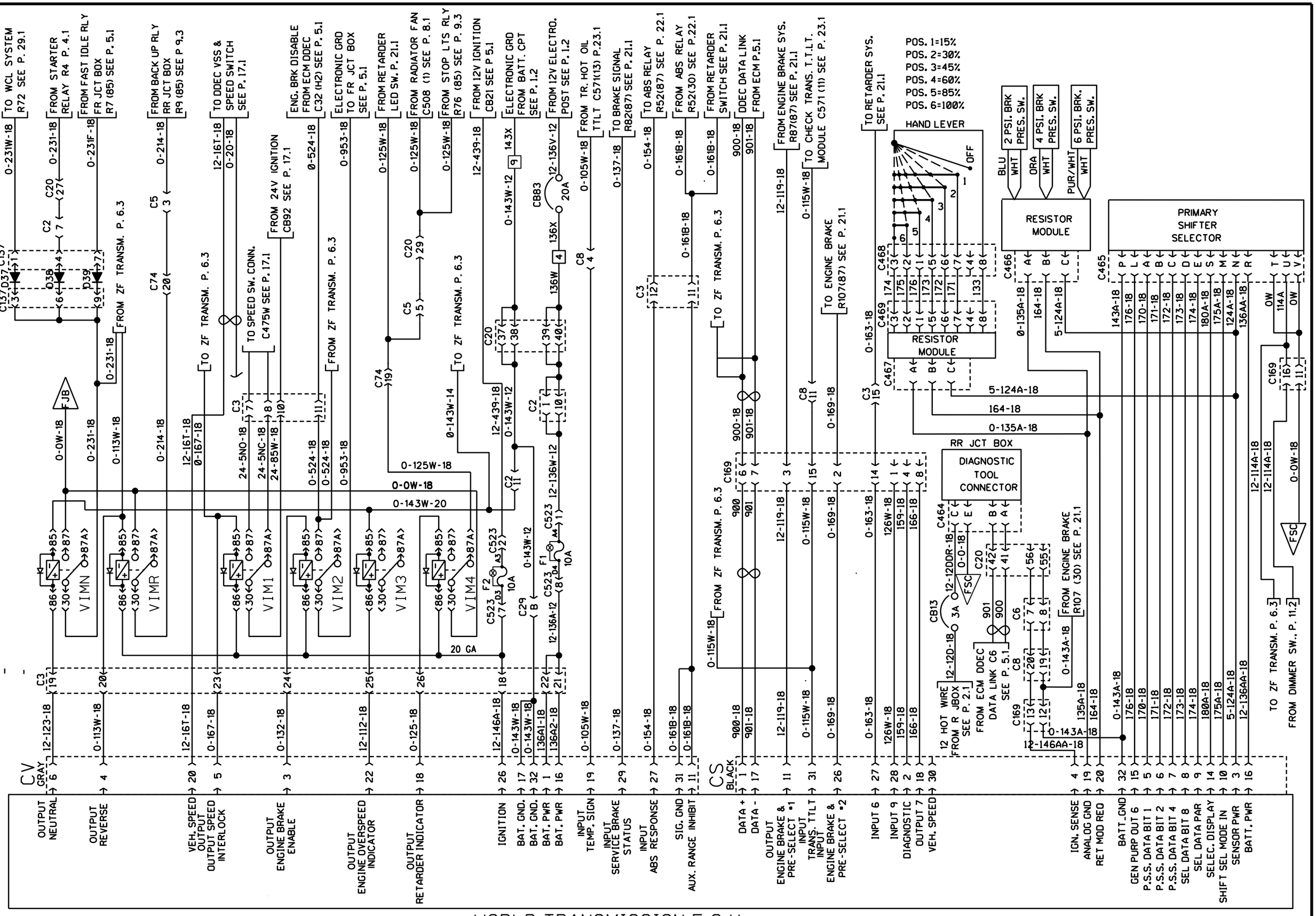

WORLD TRANSMISSION E.C.U.

PREVOST	WIRING DIAGRAM	NO: D060993	PAGE: 6.1	REVISION 00

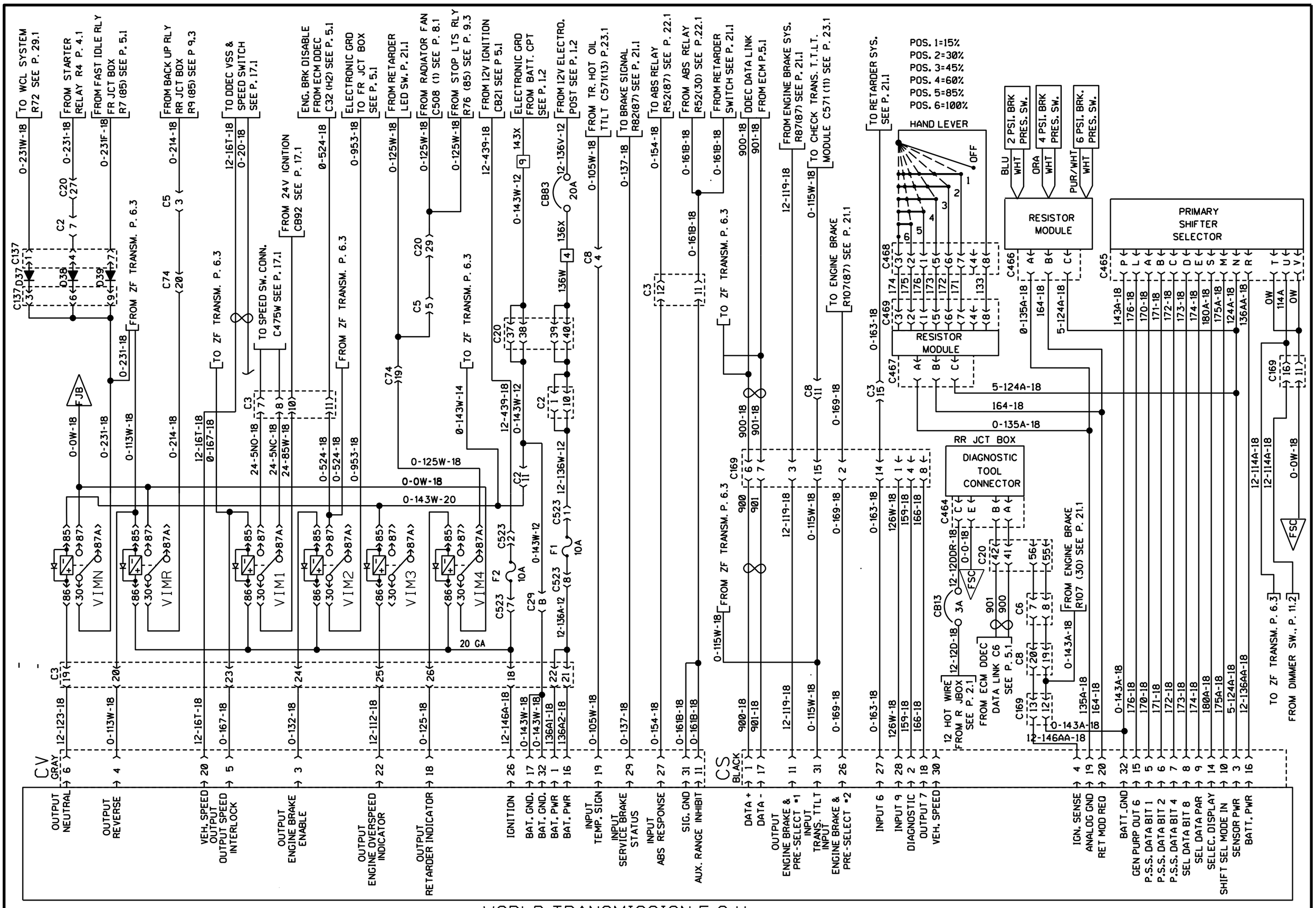

WORLD TRANSMISSION E.C.U.

PREVOST	WIRING DIAGRAM	NO: D060993	PAGE: 6.1	REVISION 05

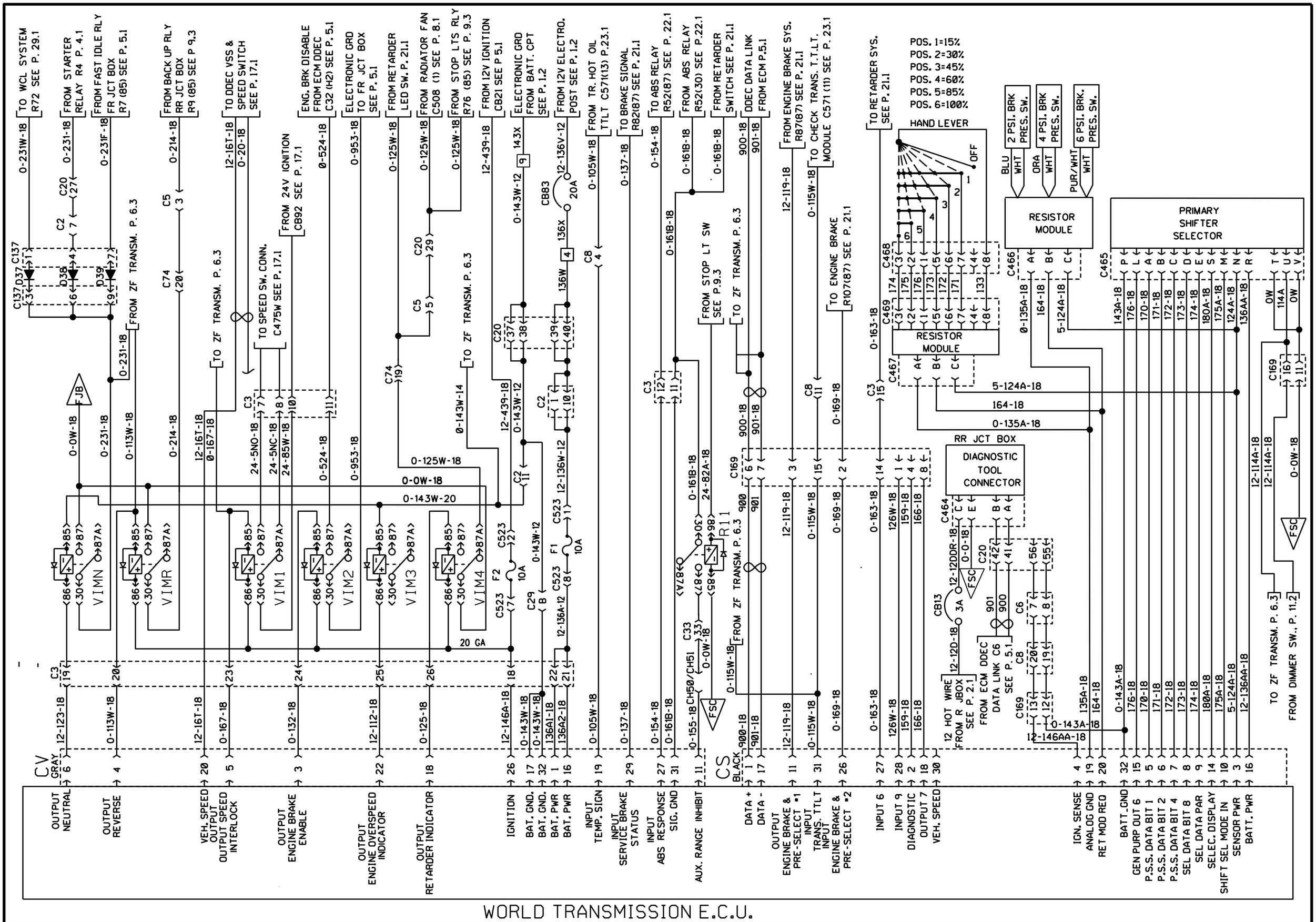

WORLD TRANSMISSION E.C.U.

PREVOST	WIRING DIAGRAM	NO: D060993	PAGE: 6.1	REVISION 08

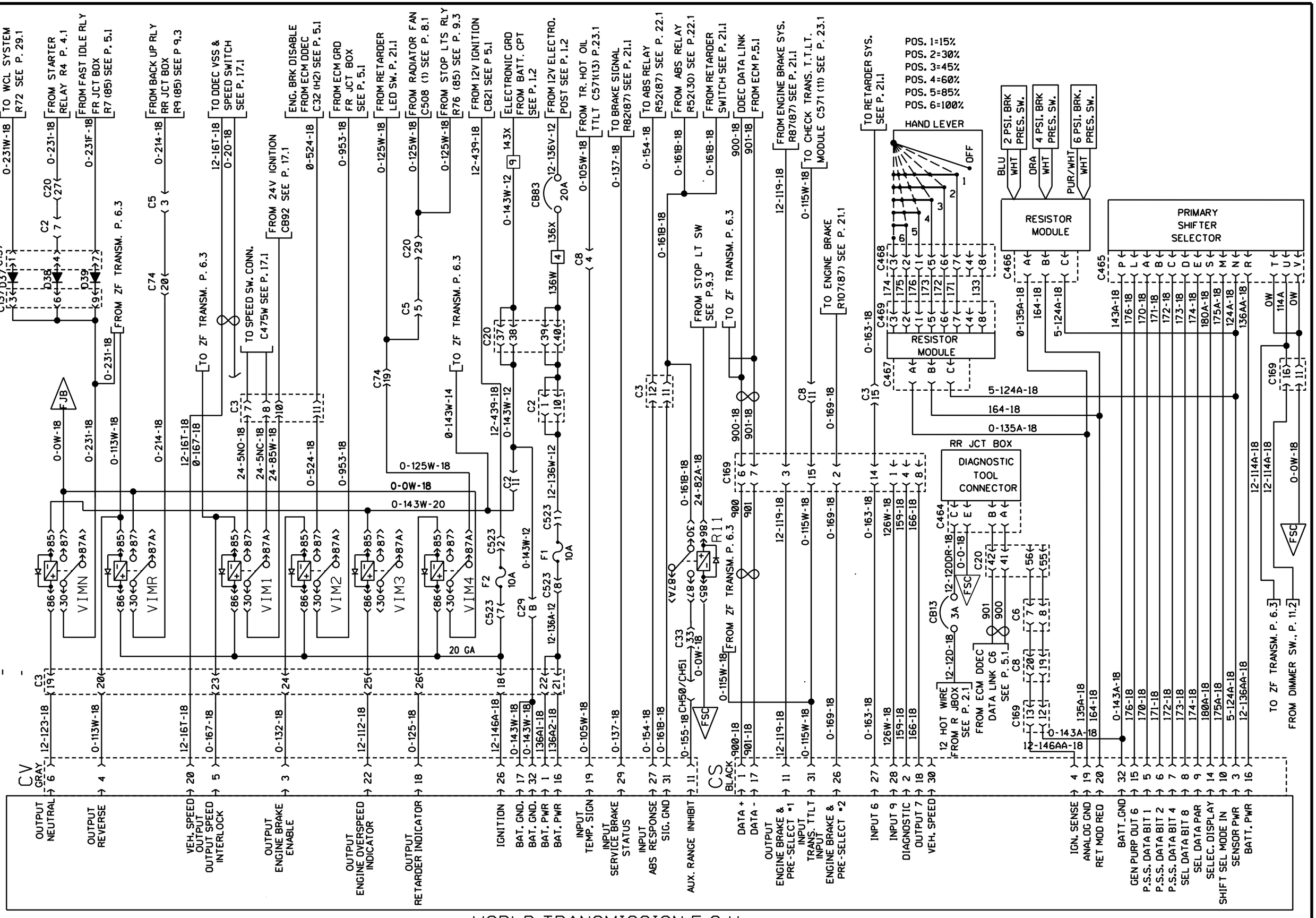

WORLD TRANSMISSION E.C.U.

PREVOST	WIRING DIAGRAM	NO: D060993	PAGE: 6.1	REVISION 09

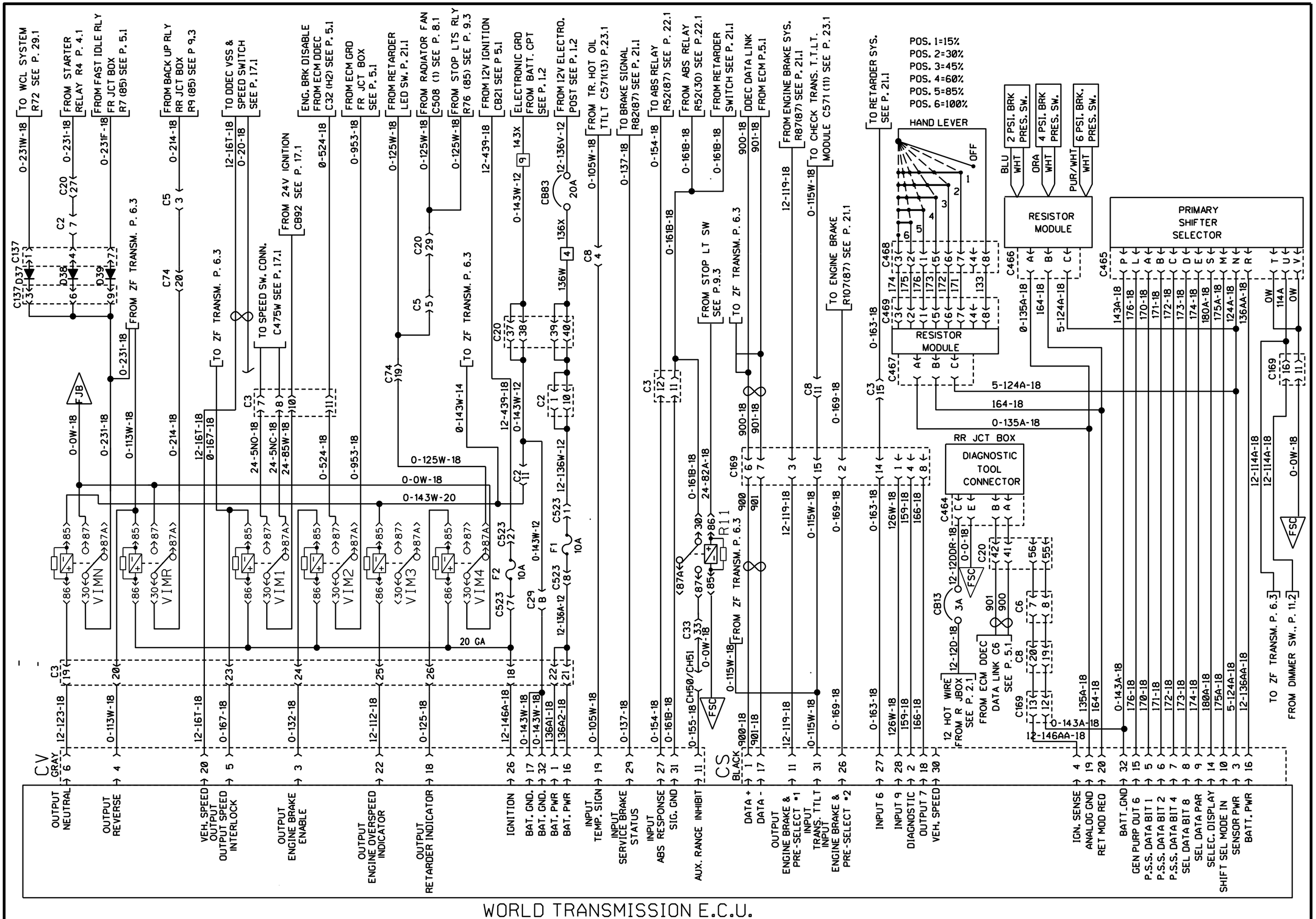

PREVOST | WIRING DIAGRAM | NO: D060993 | PAGE: 6.1 | REVISION 15

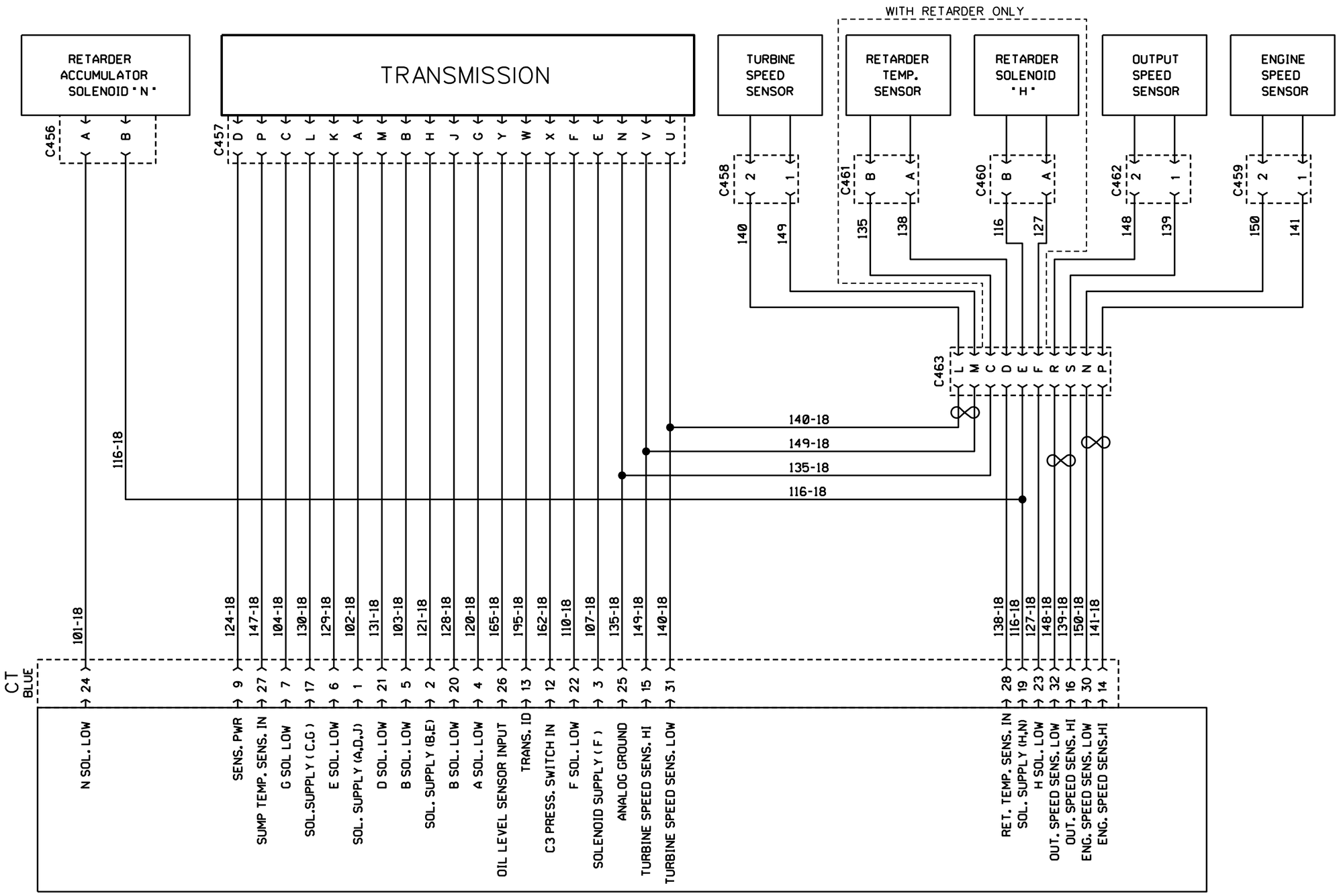

WORLD TRANSMISSION E.C.U. (SUITE)

PREVOST	WIRING DIAGRAM	NO: D060993	PAGE: 6.2	REVISION 00

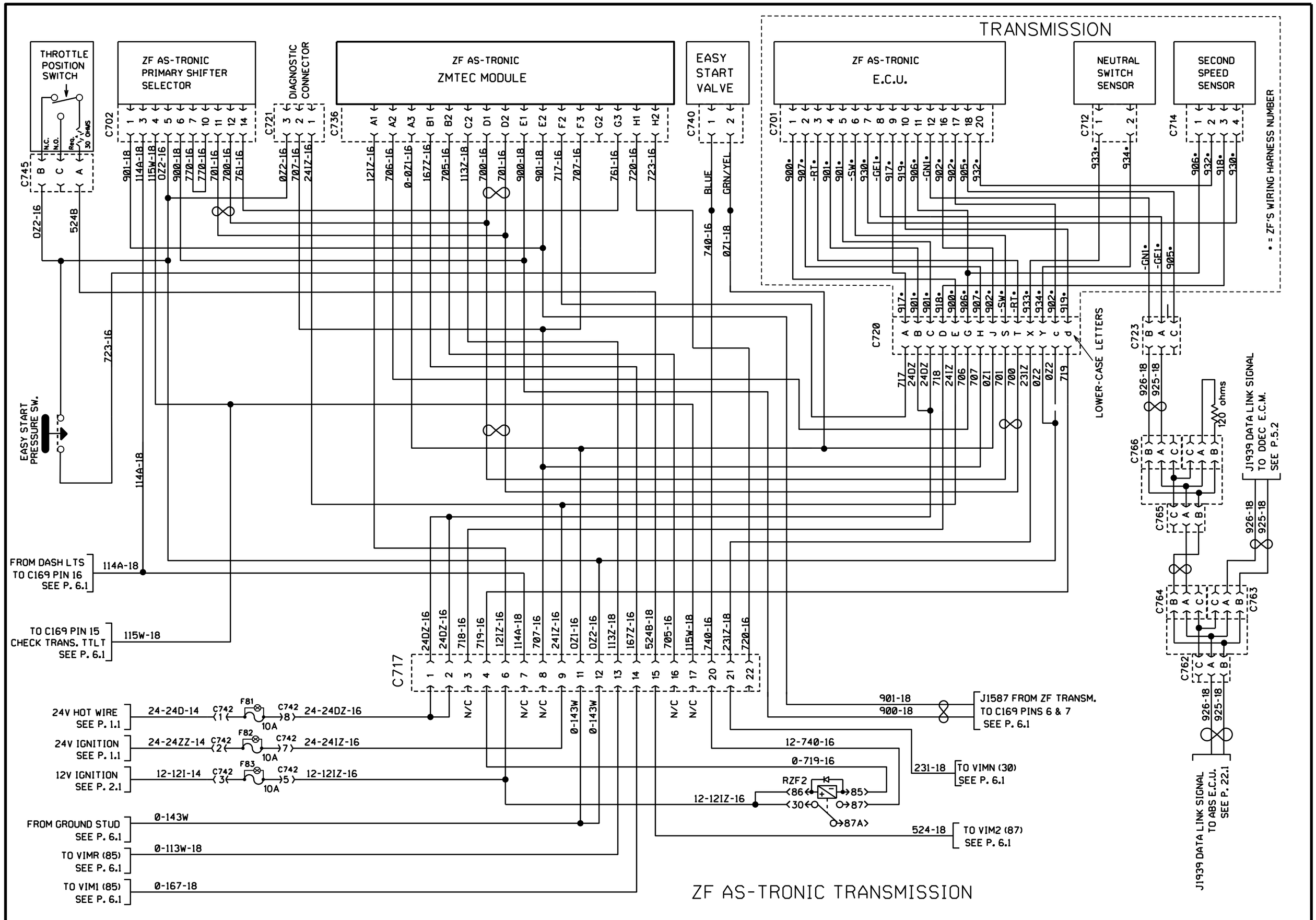

PREVOST	WIRING DIAGRAM	NO: D060993	PAGE: 6.3	REVISION 00

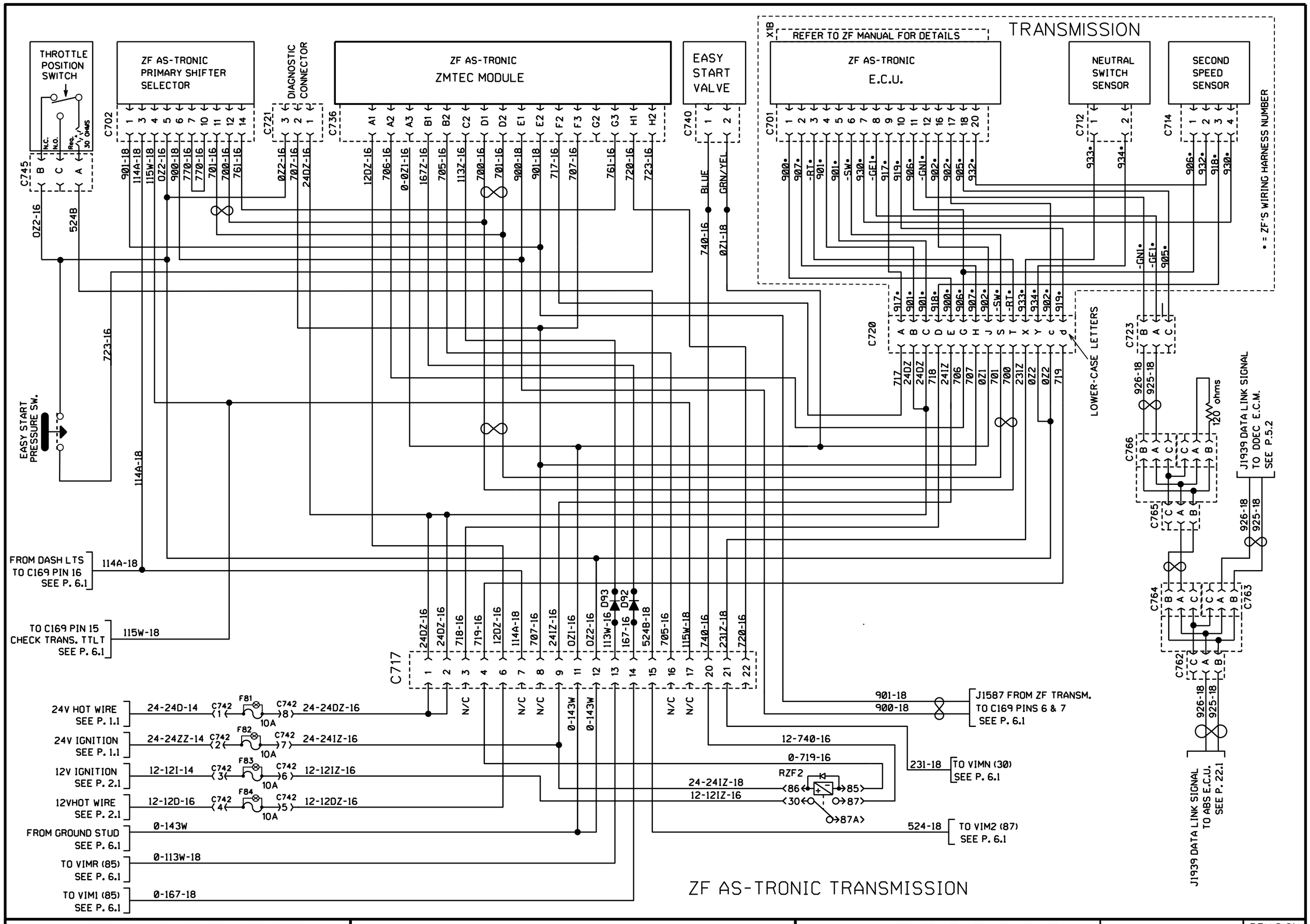

PREVOST	WIRING DIAGRAM	NO: D060993	PAGE: 6.3	REVISION 01

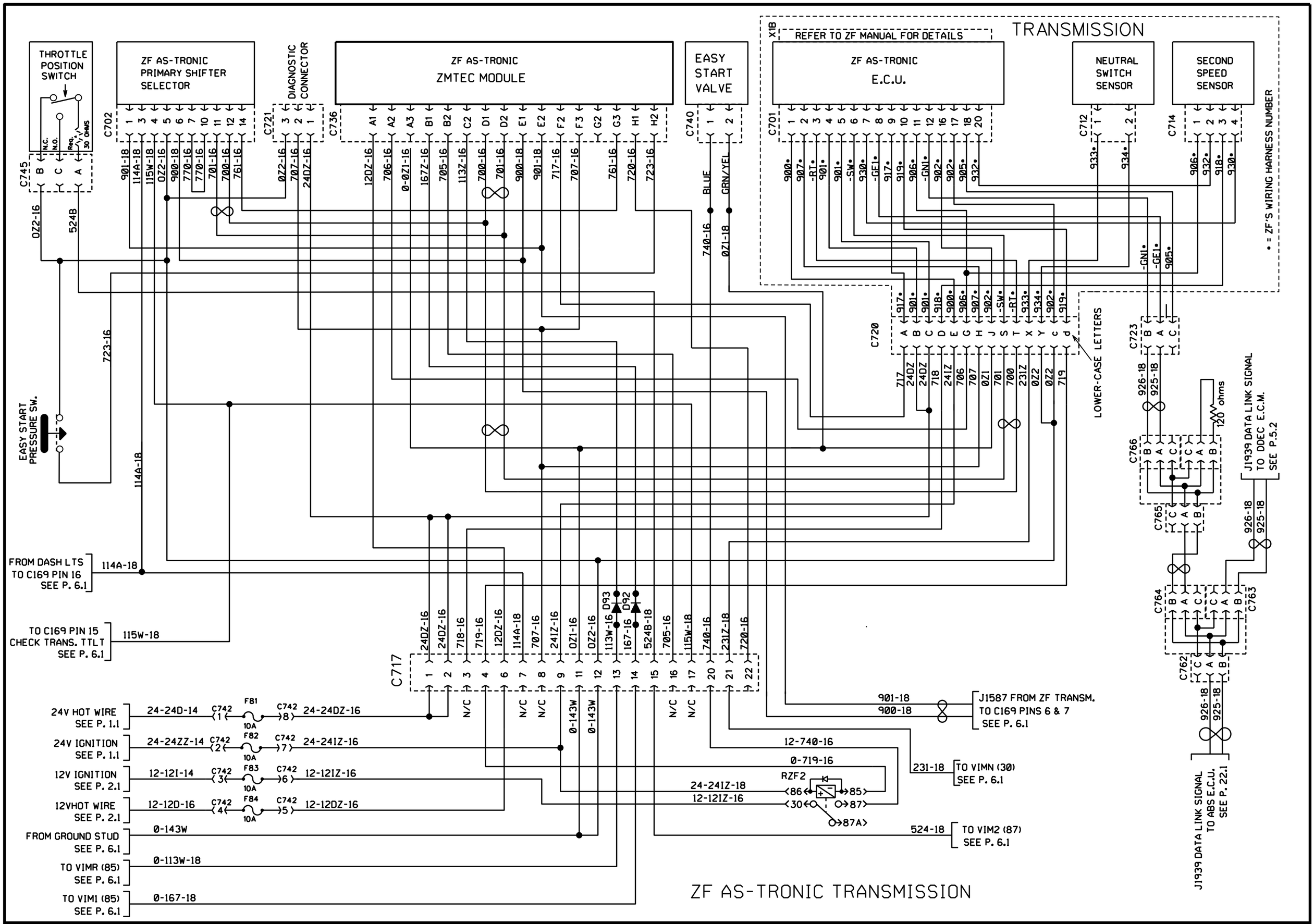

PREVOST	WIRING DIAGRAM	NO: D060993	PAGE: 6.3	REVISION 05

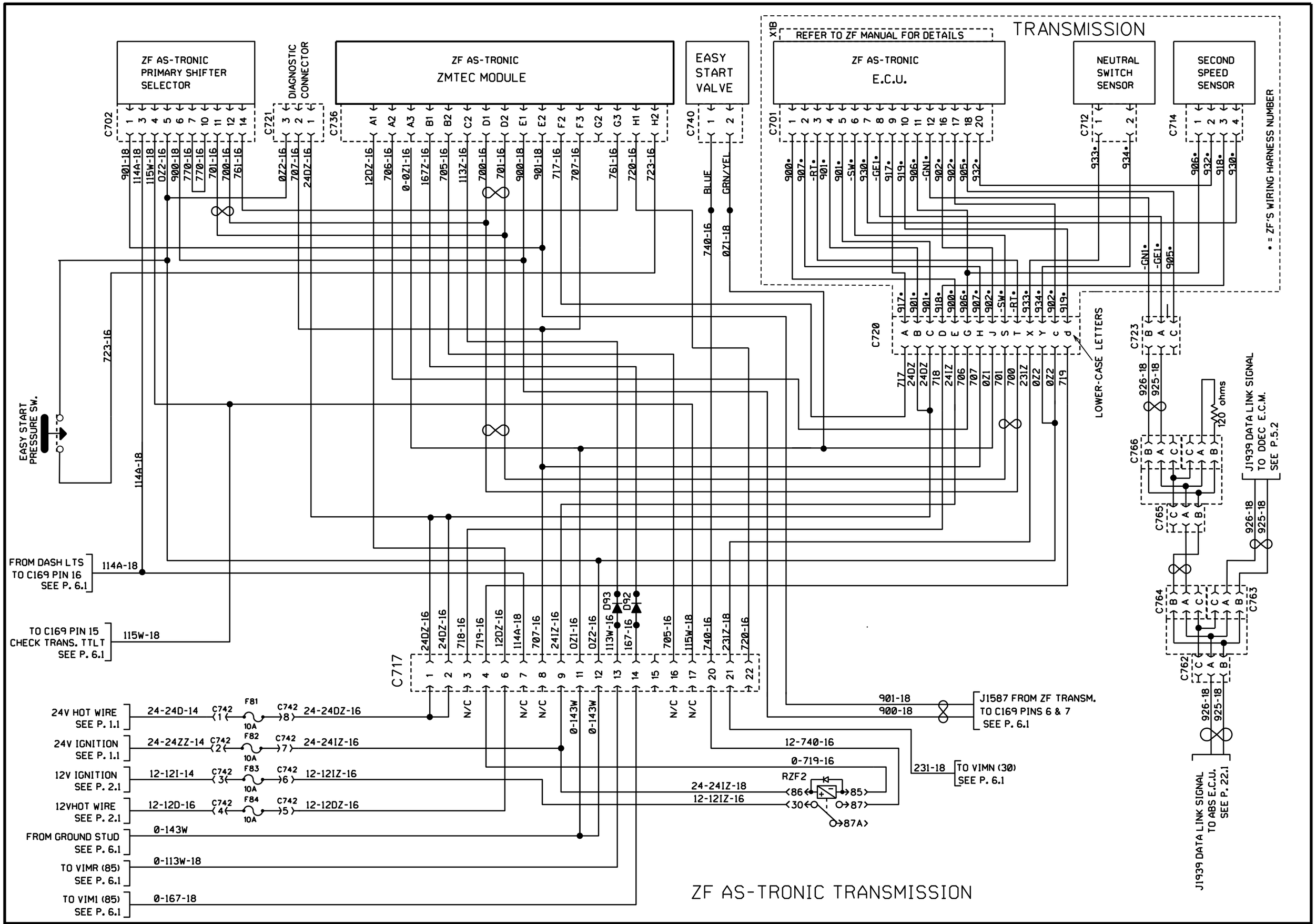
TRANSMISSION
REFER TO ZF MANUAL FOR DETAILS
X1B
ZF AS-TRONIC PRIMARY SHIFTER SELECTOR
DIAGNOSTIC CONNECTOR
ZF AS-TRONIC ZMTEC MODULE
EASY START VALVE
ZF AS-TRONIC E.C.U.
NEUTRAL SWITCH SENSOR
SECOND SPEED SENSOR
• = ZF'S WIRING HARNESS NUMBER
LOWER-CASE LETTERS
EASY START PRESSURE SW.
FROM DASH LTS TO C169 PIN 16 SEE P. 6.1
TO C169 PIN 15 CHECK TRANS. TTLT SEE P. 6.1
24V HOT WIRE SEE P. 1.1
24V IGNITION SEE P. 1.1
12V IGNITION SEE P. 2.1
12VHOT WIRE SEE P. 2.1
FROM GROUND STUD SEE P. 6.1
TO VIMR (85) SEE P. 6.1
TO VIMI (85) SEE P. 6.1
J1587 FROM ZF TRANSM. TO C169 PINS 6 & 7 SEE P. 6.1
TO VIMN (30) SEE P. 6.1
J1939 DATA LINK SIGNAL TO DDEC E.C.M. SEE P. 5.2
J1939 DATA LINK SIGNAL TO ABS E.C.U. SEE P. 22.1
120 ohms
RZF2
ZF AS-TRONIC TRANSMISSION

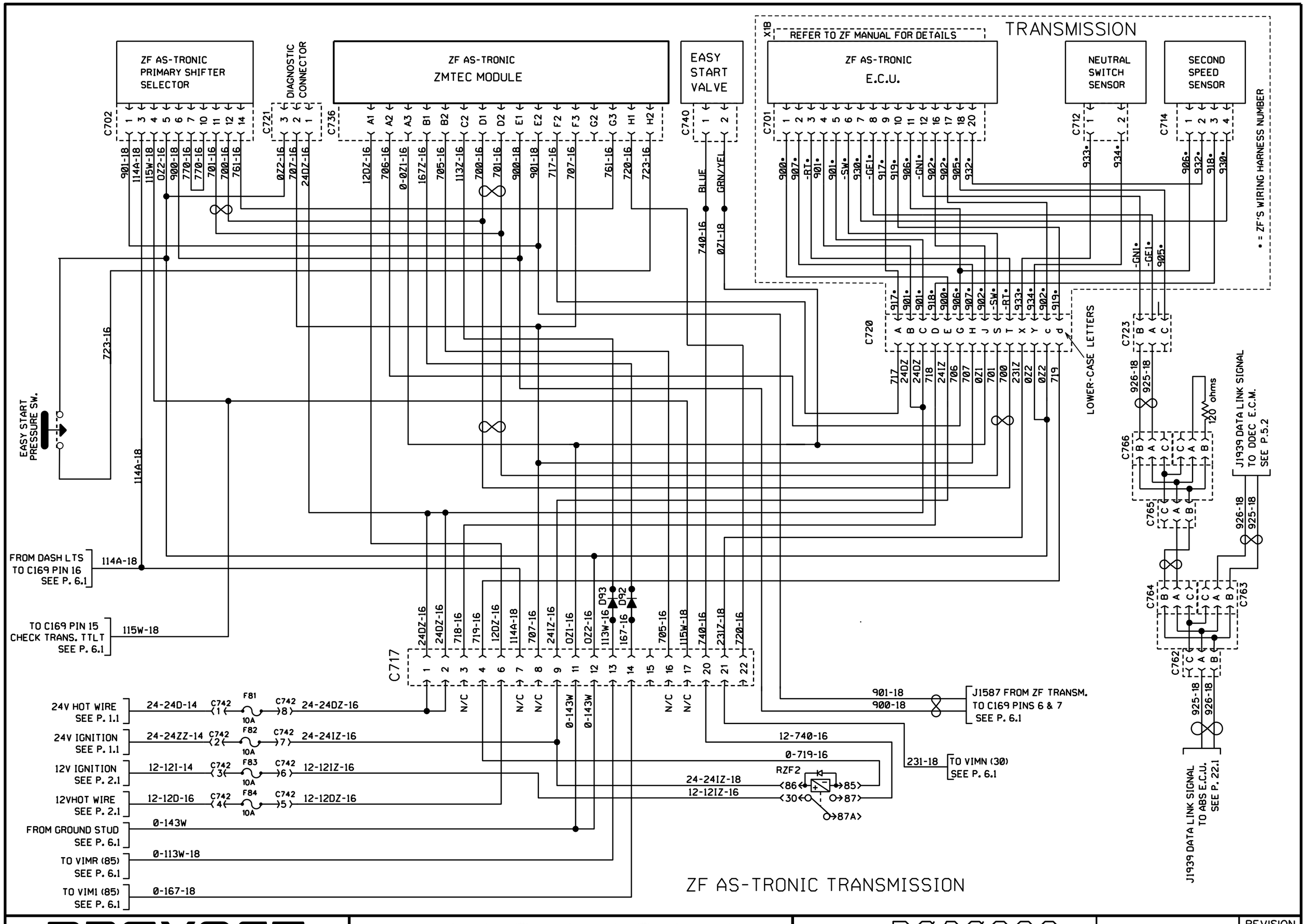

PREVOST	WIRING DIAGRAM	NO: D060993	PAGE: 6.3	REVISION 09

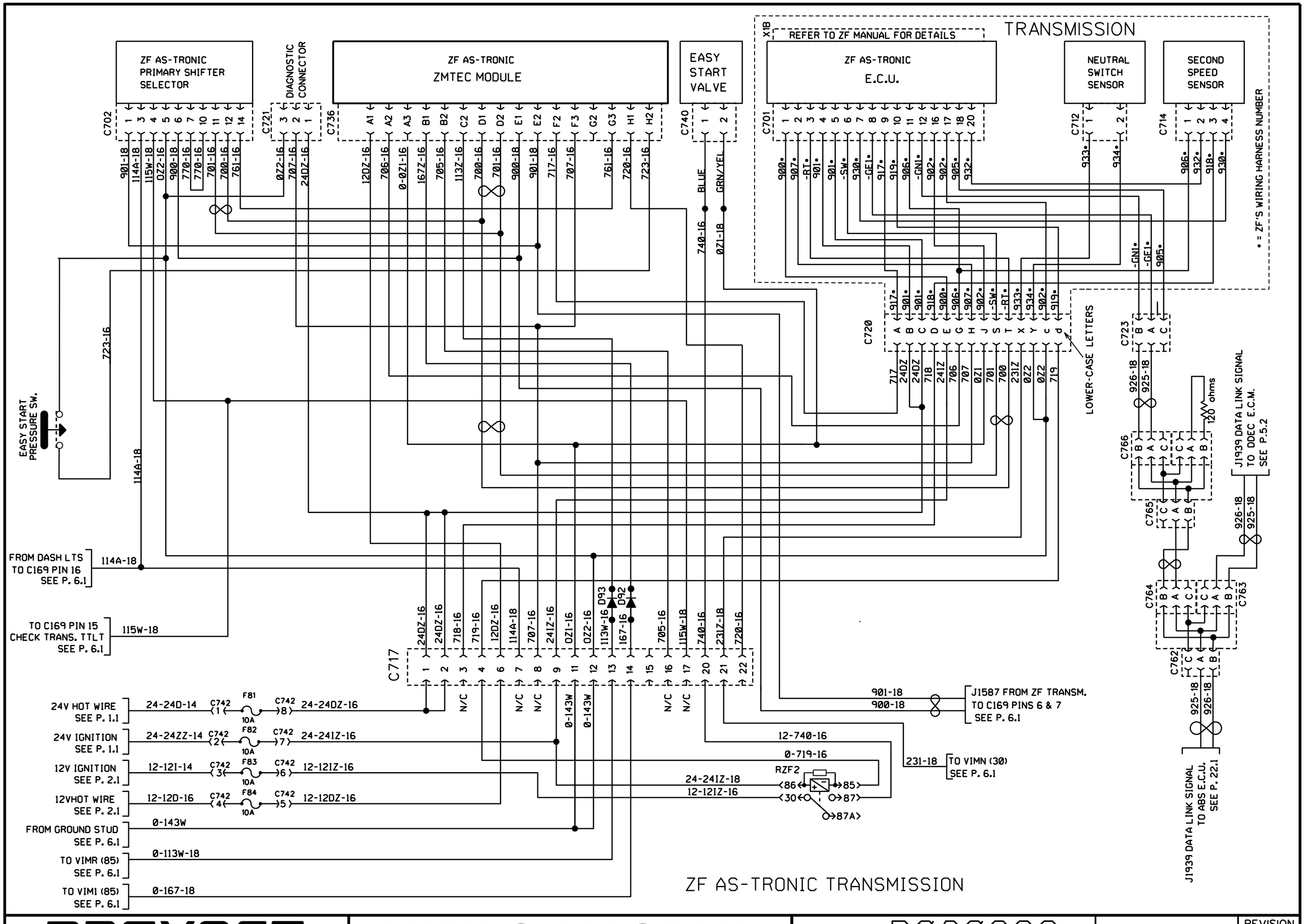
TRANSMISSION
REFER TO ZF MANUAL FOR DETAILS
X1B
ZF AS-TRONIC PRIMARY SHIFTER SELECTOR
DIAGNOSTIC CONNECTOR
ZF AS-TRONIC ZMTEC MODULE
EASY START VALVE
ZF AS-TRONIC E.C.U.
NEUTRAL SWITCH SENSOR
SECOND SPEED SENSOR
• = ZF'S WIRING HARNESS NUMBER
LOWER-CASE LETTERS
EASY START PRESSURE SW.
FROM DASH LTS TO C169 PIN 16 SEE P. 6.1
TO C169 PIN 15 CHECK TRANS. TTLT SEE P. 6.1
24V HOT WIRE SEE P. 1.1
24V IGNITION SEE P. 1.1
12V IGNITION SEE P. 2.1
12VHOT WIRE SEE P. 2.1
FROM GROUND STUD SEE P. 6.1
TO VIMR (85) SEE P. 6.1
TO VIMI (85) SEE P. 6.1
J1587 FROM ZF TRANSM. TO C169 PINS 6 & 7 SEE P. 6.1
TO VIMN (30) SEE P. 6.1
J1939 DATA LINK SIGNAL TO DDEC E.C.M. SEE P. 5.2
J1939 DATA LINK SIGNAL TO ABS E.C.U. SEE P. 22.1
120 ohms
RZF2
ZF AS-TRONIC TRANSMISSION

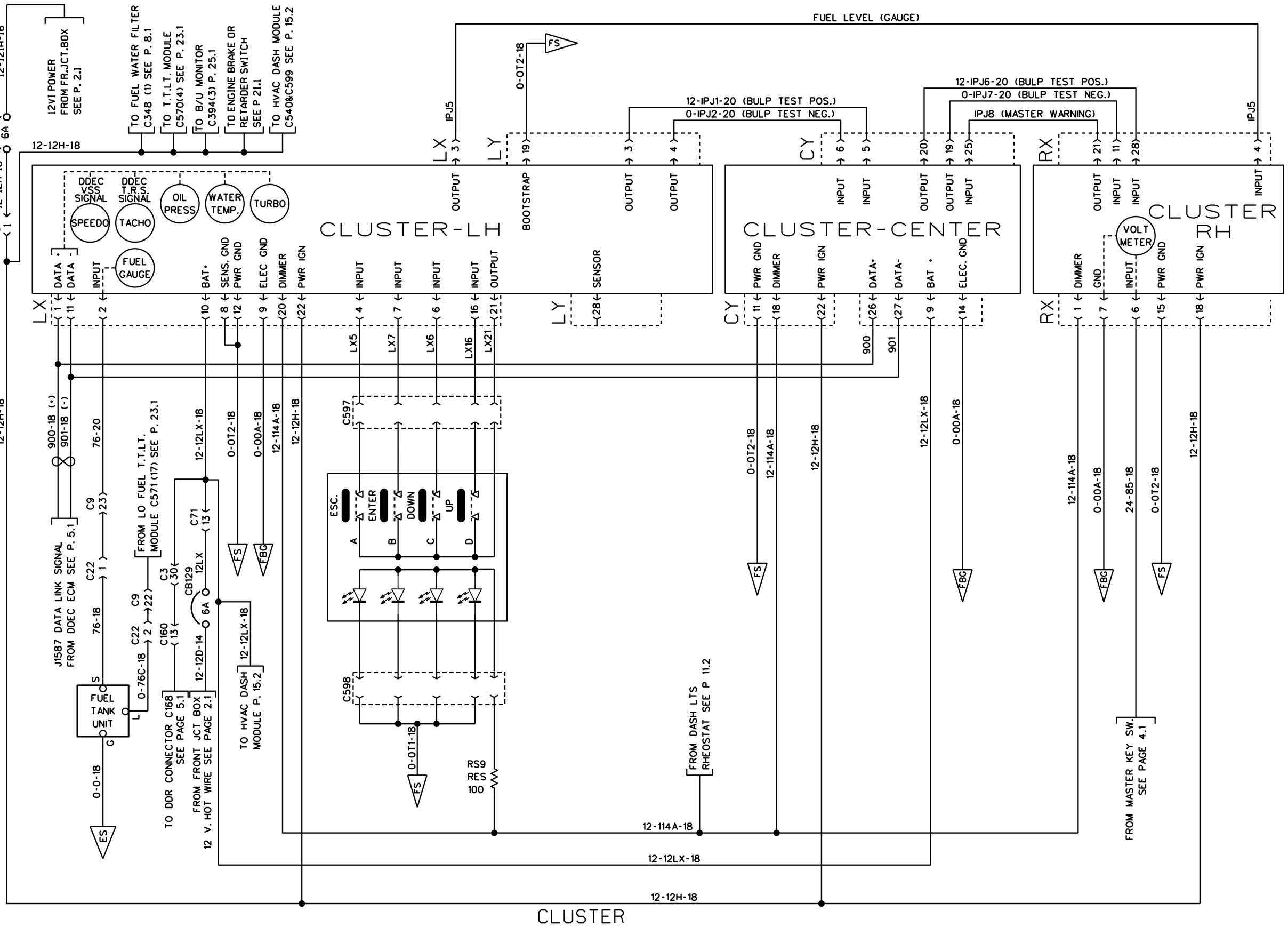

PREVOST	WIRING DIAGRAM	NO: D060993	PAGE: 7.1	REVISION 00

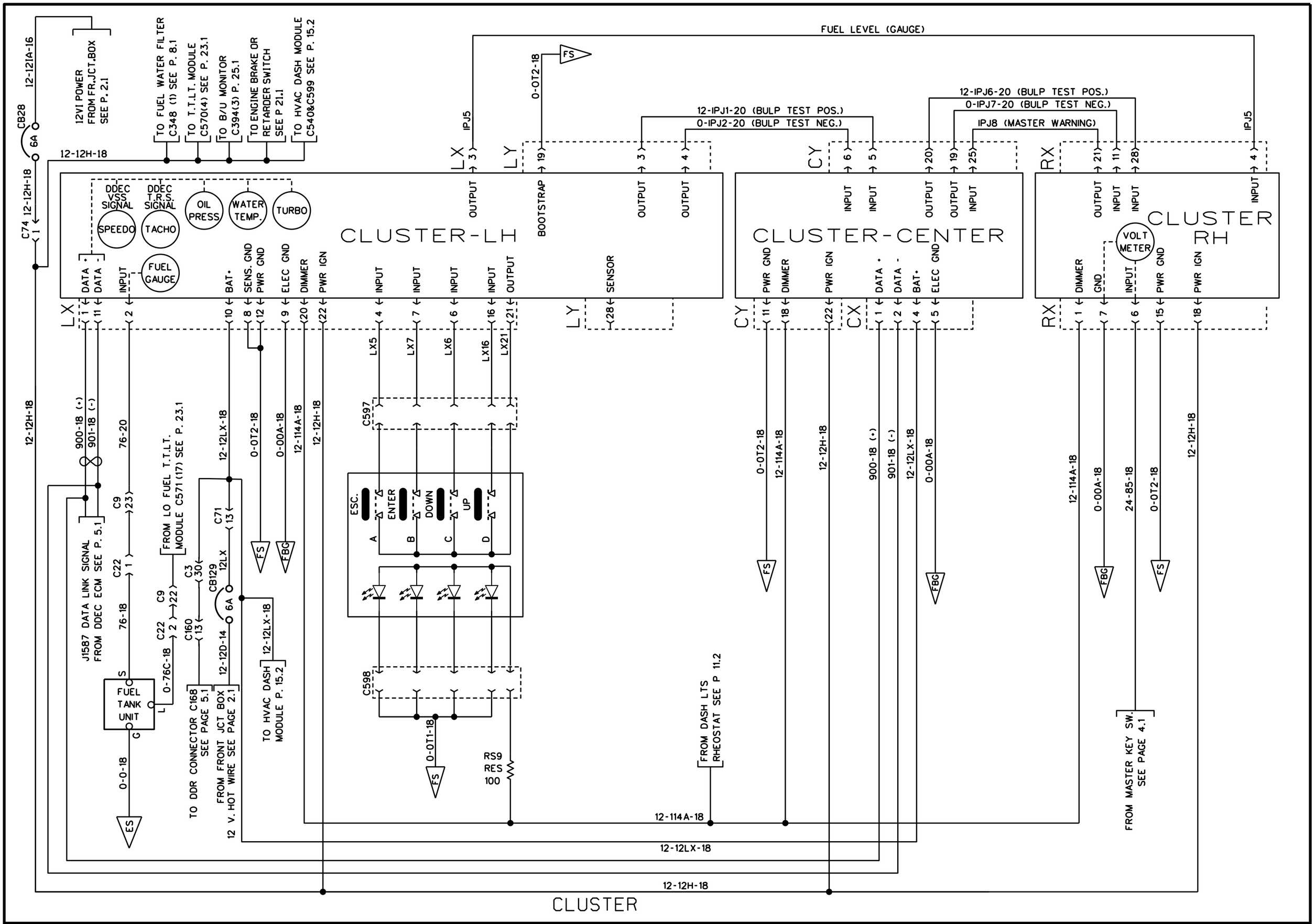

PREVOST	WIRING DIAGRAM	NO: D060993	PAGE: 7.1	REVISION 05

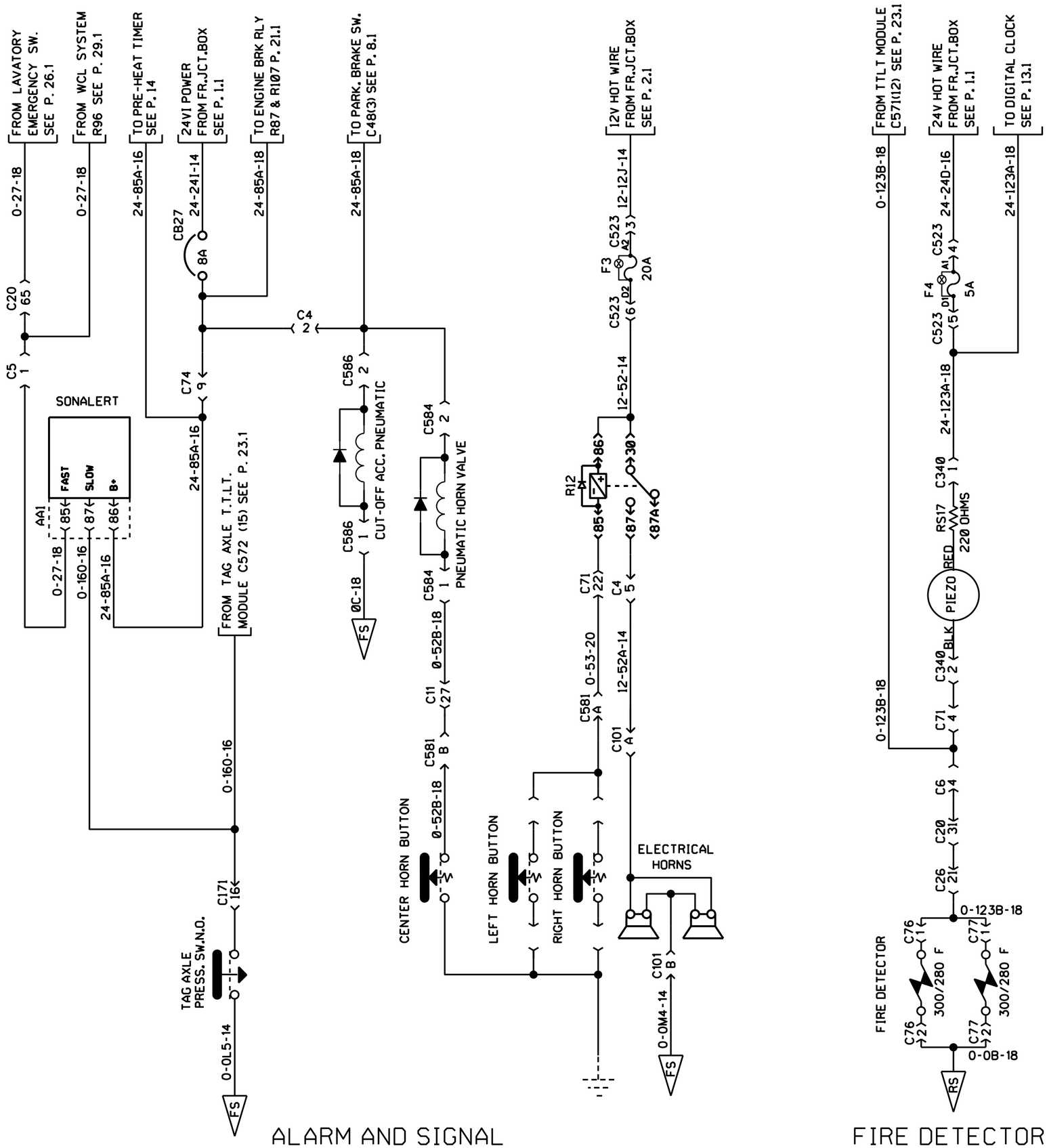

PREVOST	WIRING DIAGRAM	NO: D060993	PAGE: 7.2	REVISION 00

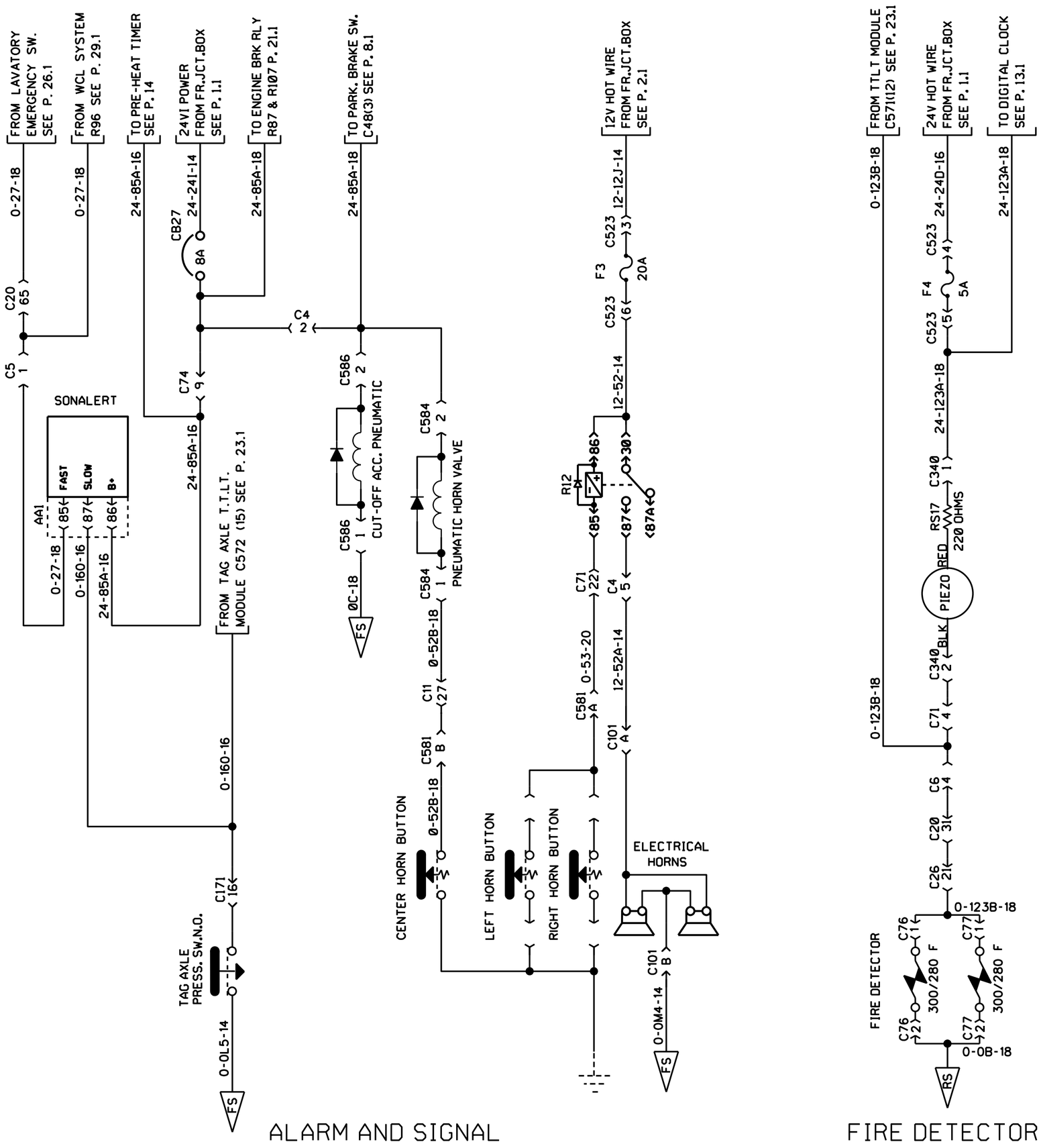

PREVOST	WIRING DIAGRAM	NO: D060993	PAGE: 7.2	REVISION 05

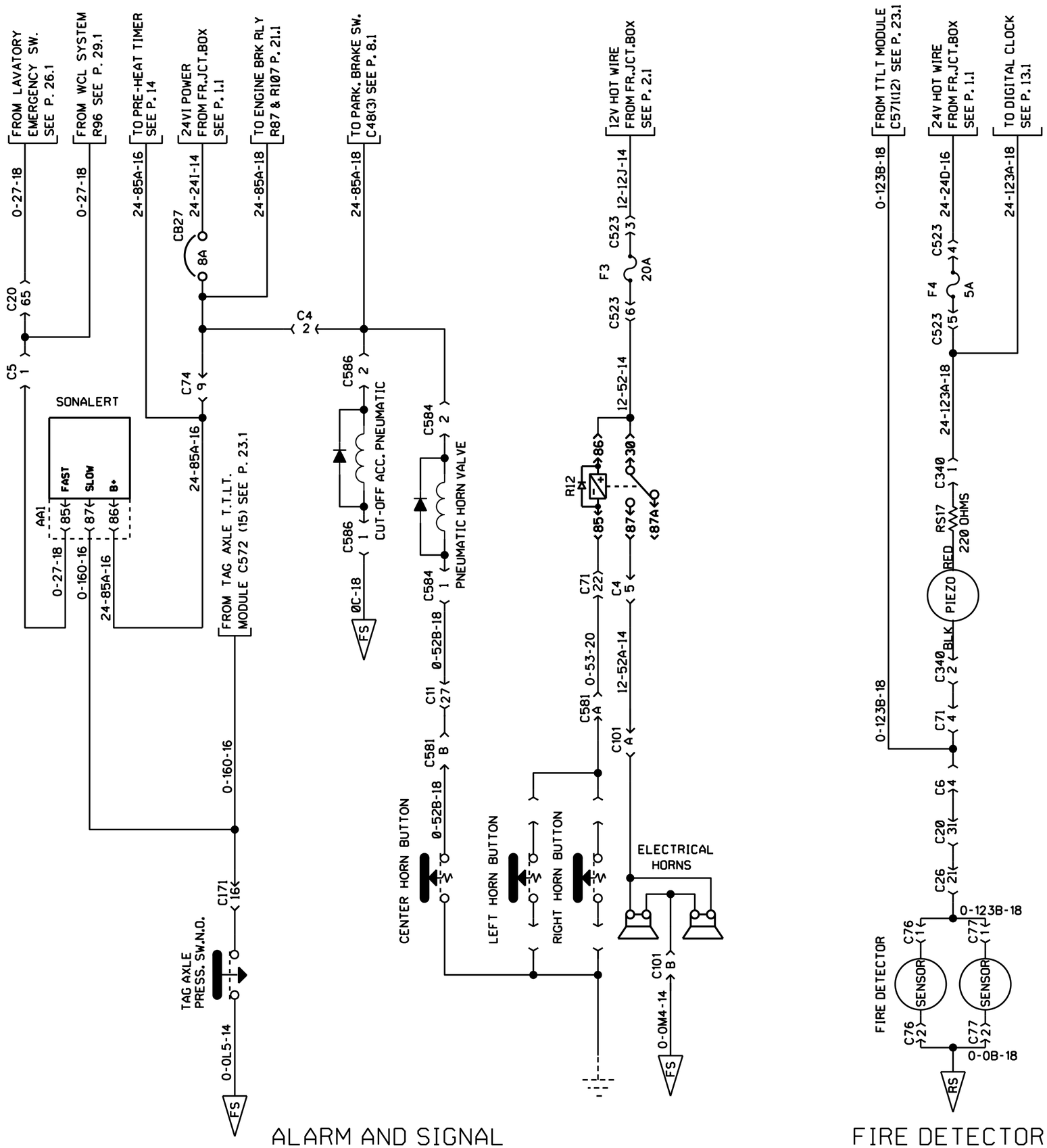

ALARM AND SIGNAL

FIRE DETECTOR

PREVOST	WIRING DIAGRAM	NO: D060993	PAGE: 7.2	REVISION 08

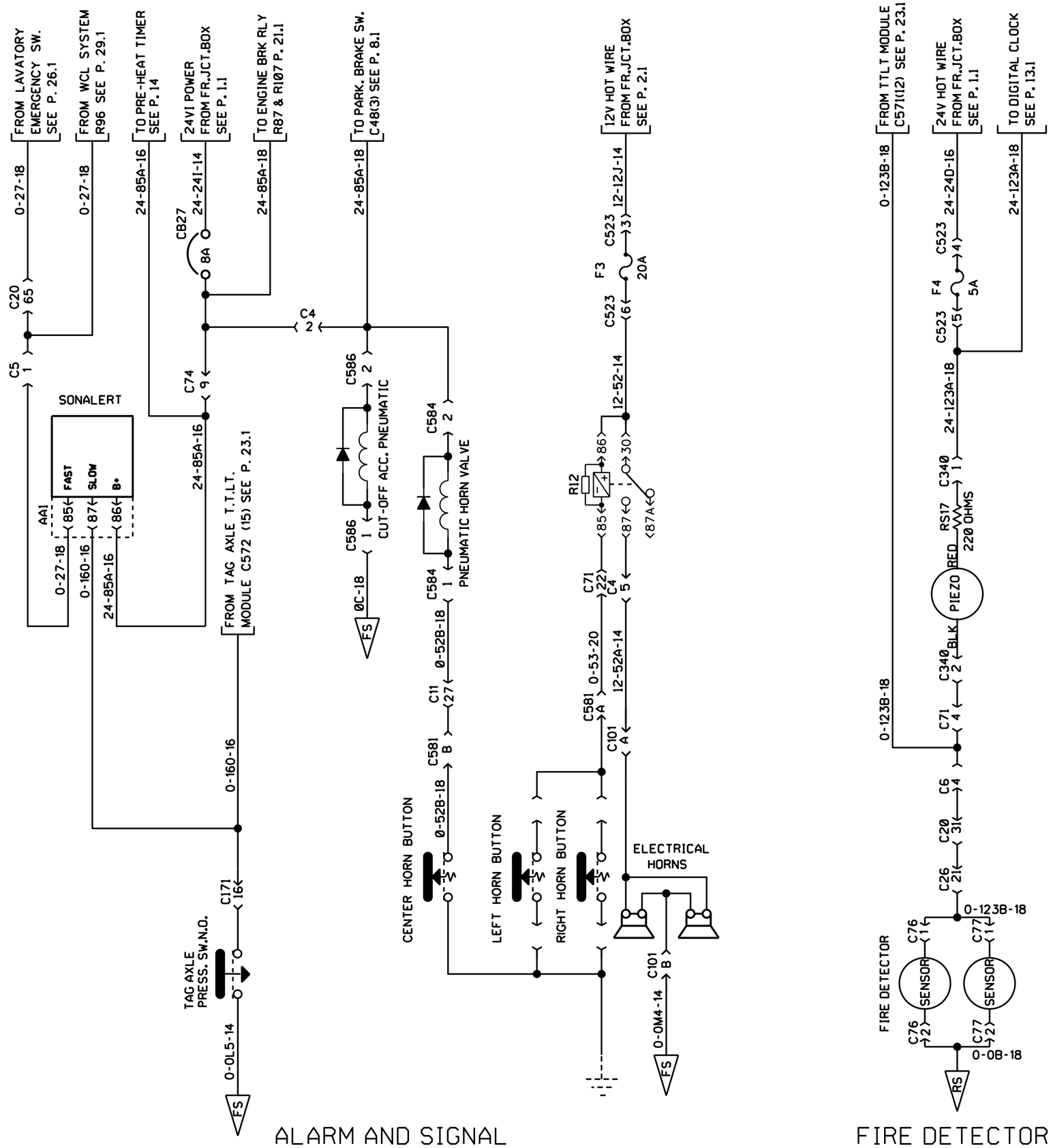

ALARM AND SIGNAL

FIRE DETECTOR

PREVOST	WIRING DIAGRAM	NO: D060993	PAGE: 7.2	REVISION 15

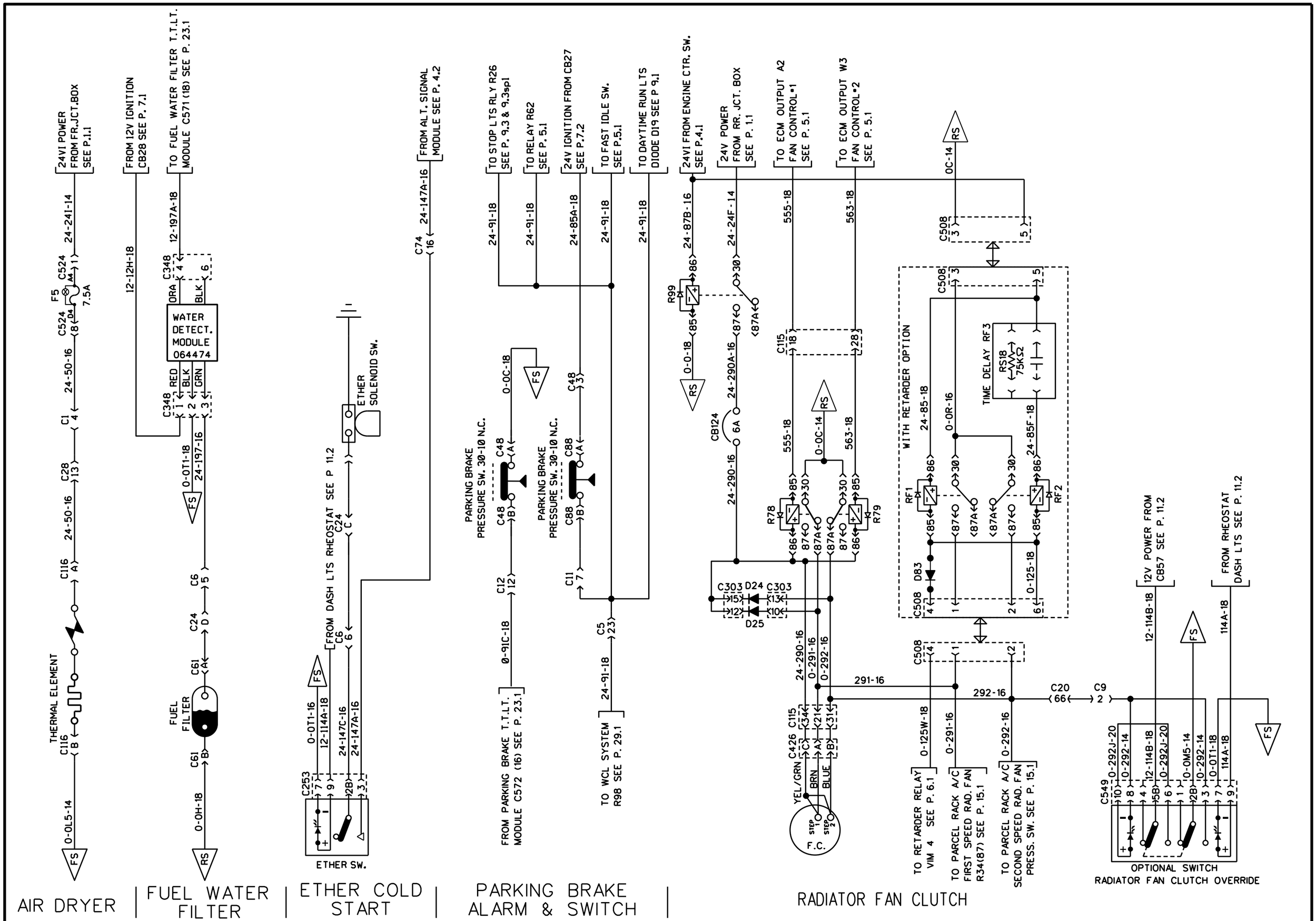

PREVOST	WIRING DIAGRAM	NO: D060993	PAGE: 8.1	REVISION 00

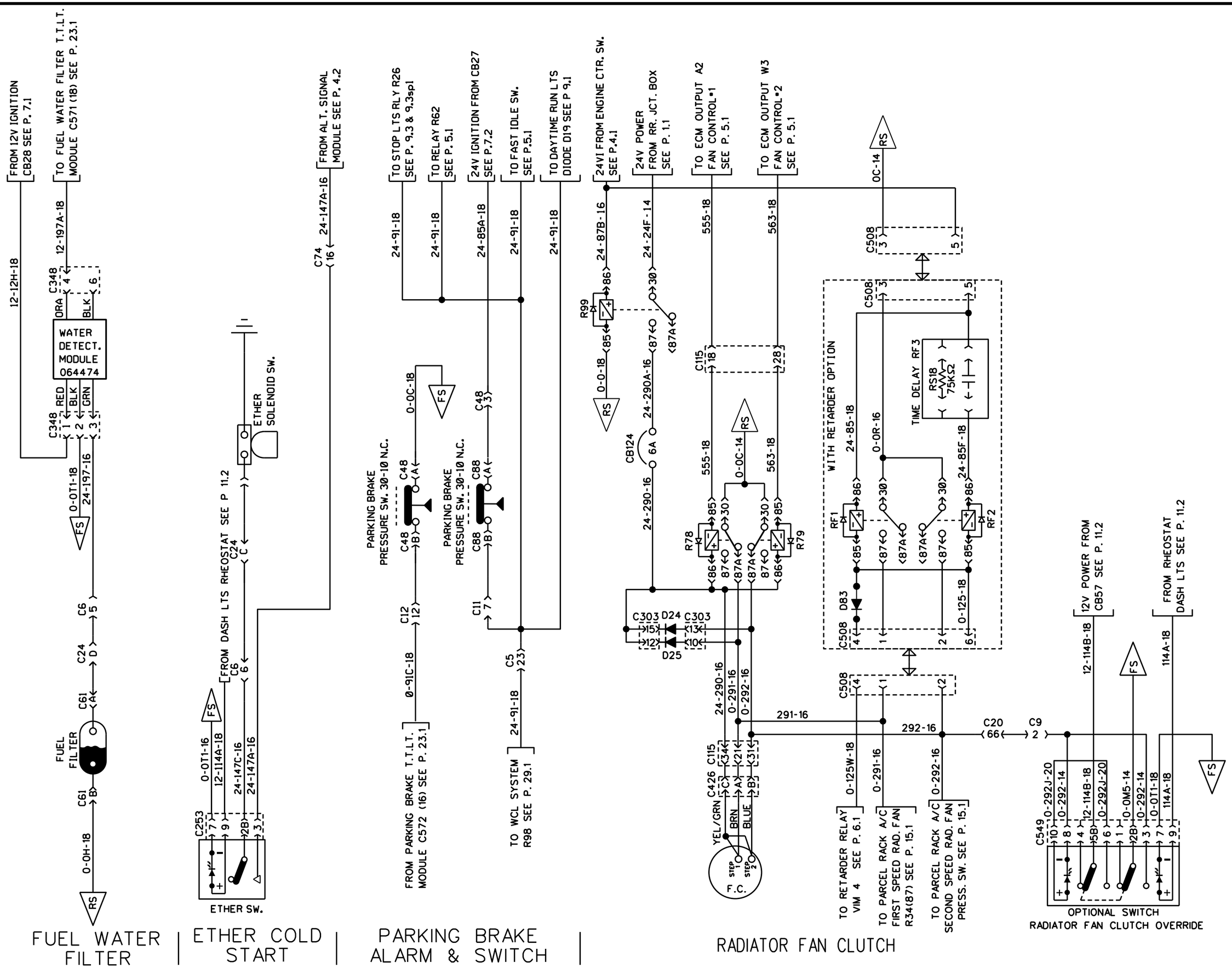

PREVOST	WIRING DIAGRAM	NO: D060993	PAGE: 8.1	REVISION 01

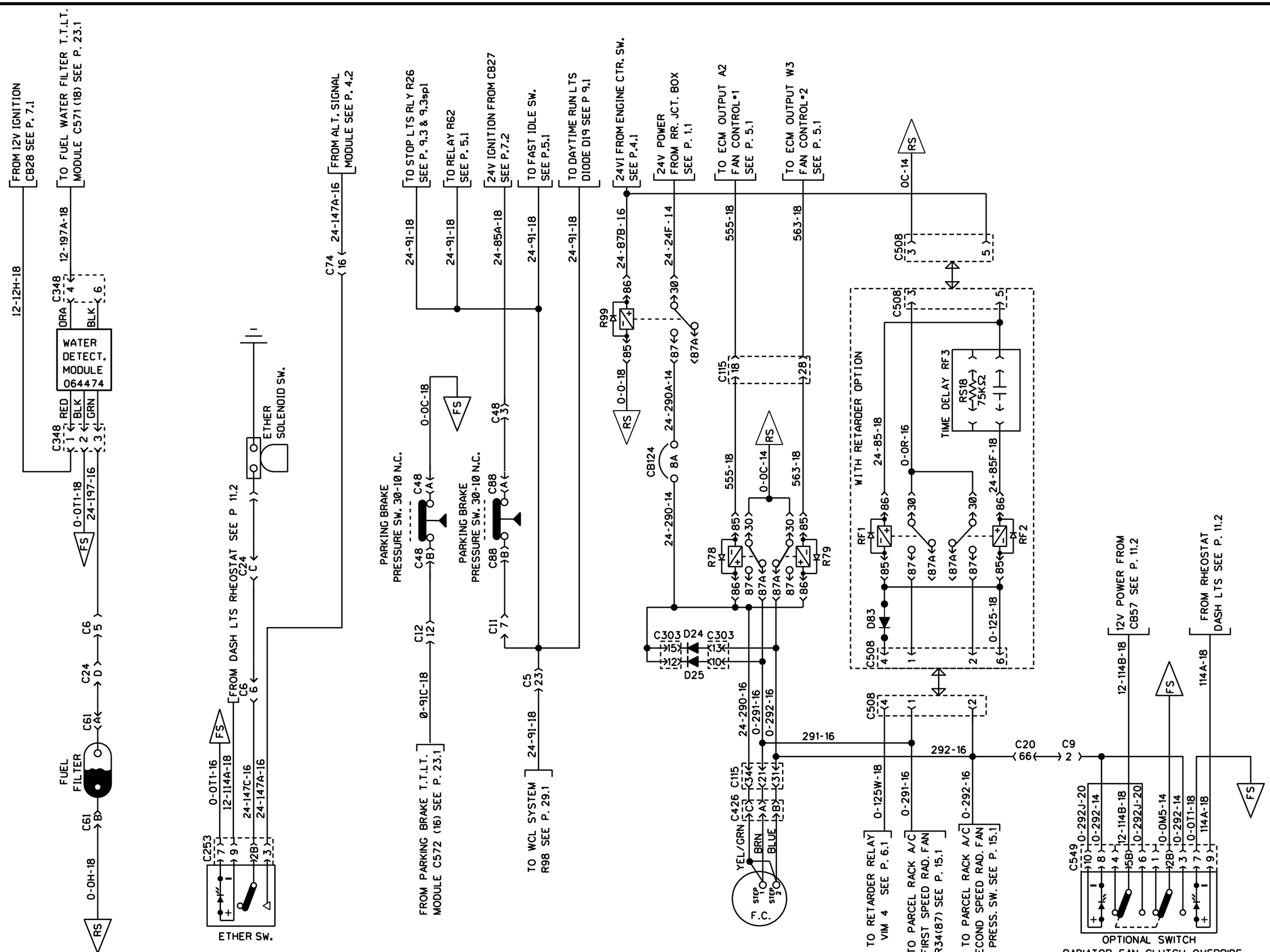

PREVOST	WIRING DIAGRAM	NO: D060993	PAGE: 8.1	REVISION 05

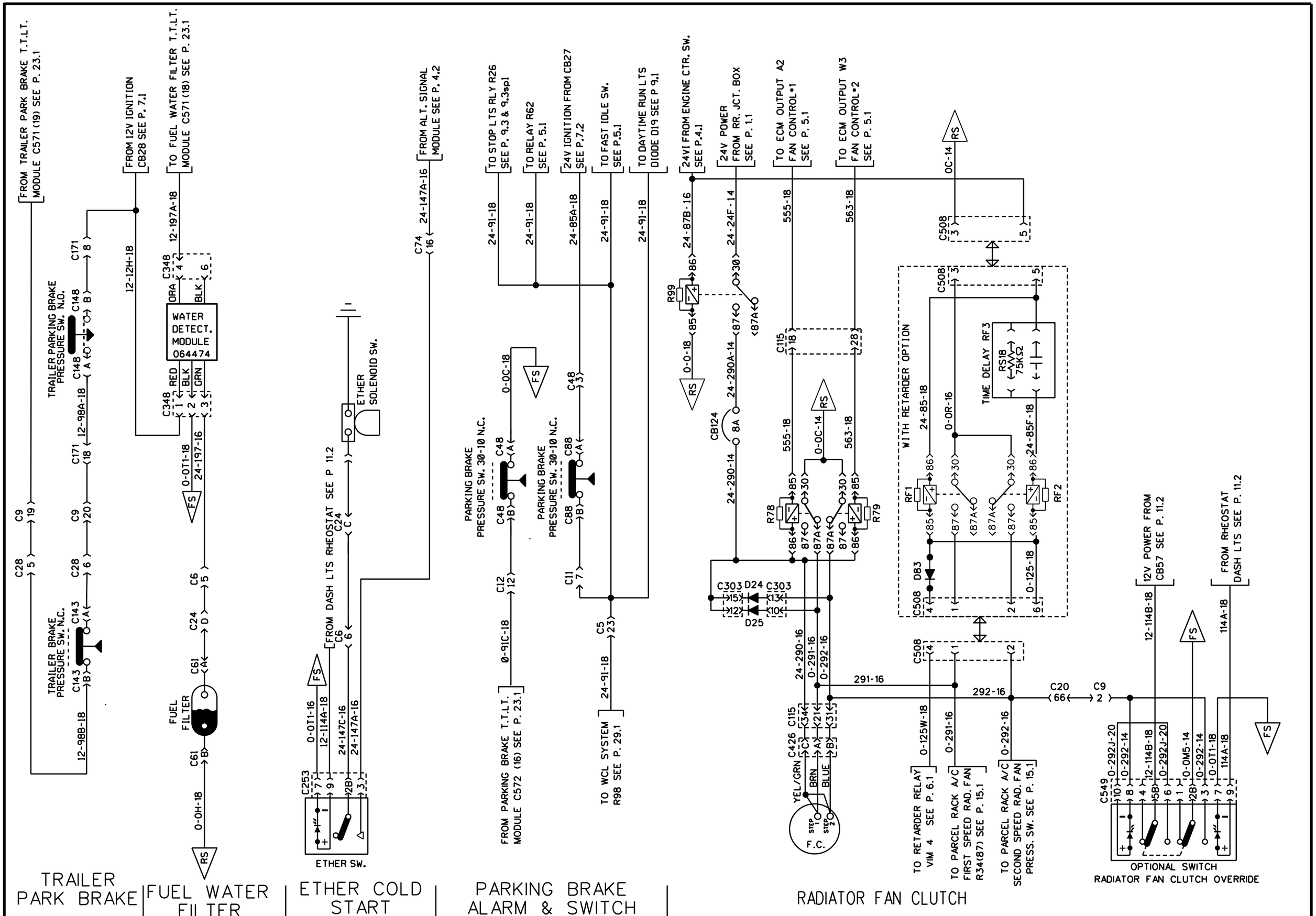

PREVOST	WIRING DIAGRAM	NO: D060993	PAGE: 8.1	REVISION 15

PREVOST

WIRING DIAGRAM

AIR DRYER | FUEL WATER FILTER | ETHER COLD START | PARKING BRAKE ALARM & SAFETY SW. | RADIATOR FAN CLUTCH

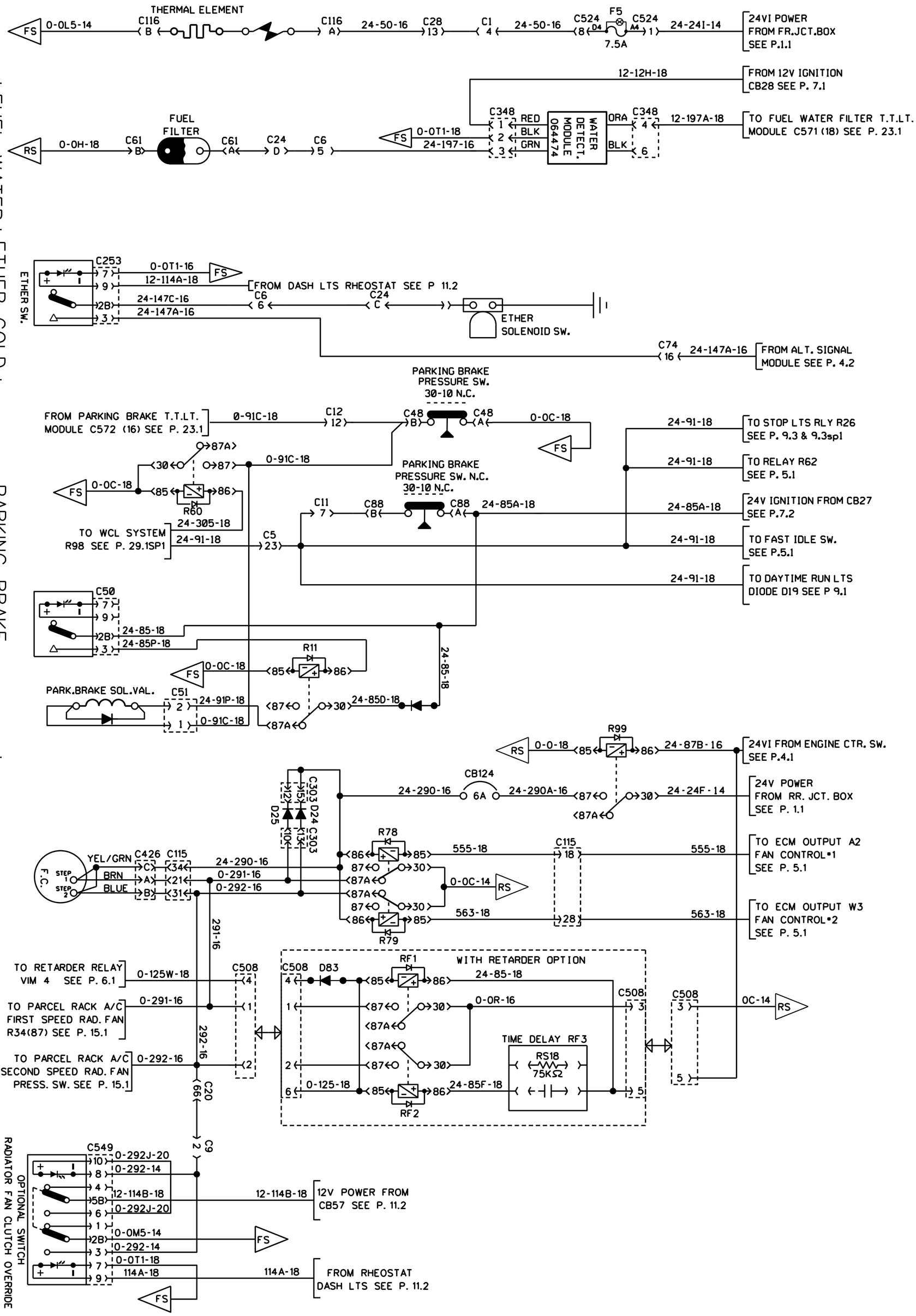

NO: D060993

PAGE: 8.1 sp1

REVISION 00

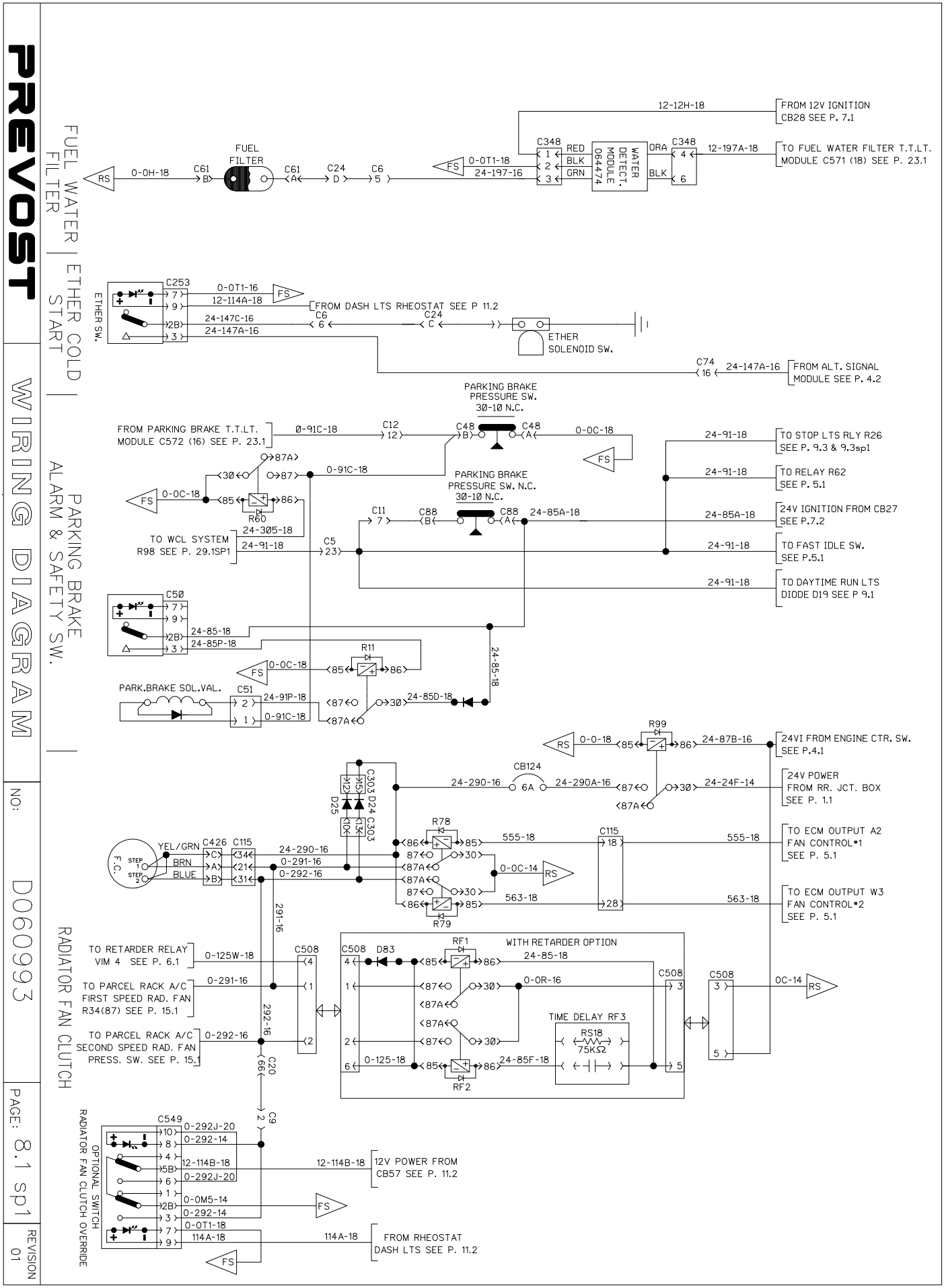
PREVOST
WIRING DIAGRAM
NO: D060993
PAGE: 8.1 SP1
REVISION 01
FUEL WATER FILTER
ETHER COLD START
PARKING BRAKE ALARM & SAFETY SW.
RADIATOR FAN CLUTCH
FUEL FILTER
RS
0-0H-18
C61
C24
C6
FS
0-0T1-18
24-197-16
12-12H-18
FROM 12V IGNITION CB28 SEE P. 7.1
C348
RED
BLK
GRN
WATER DETECT. MODULE 064474
ORA
12-197A-18
TO FUEL WATER FILTER T.T.LT. MODULE C571 (18) SEE P. 23.1
ETHER SW.
C253
0-0T1-16
12-114A-18
FROM DASH LTS RHEOSTAT SEE P 11.2
24-147C-16
24-147A-16
ETHER SOLENOID SW.
C74
24-147A-16
FROM ALT. SIGNAL MODULE SEE P. 4.2
PARKING BRAKE PRESSURE SW. 30-10 N.C.
FROM PARKING BRAKE T.T.LT. MODULE C572 (16) SEE P. 23.1
0-91C-18
C12
C48
0-0C-18
24-91-18
TO STOP LTS RLY R26 SEE P. 9.3 & 9.3sp1
TO RELAY R62 SEE P. 5.1
87A
30
87
85
86
R60
24-305-18
PARKING BRAKE PRESSURE SW. N.C. 30-10 N.C.
C11
C88
24-85A-18
24V IGNITION FROM CB27 SEE P.7.2
TO WCL SYSTEM R98 SEE P. 29.1SP1
C5
TO FAST IDLE SW. SEE P.5.1
TO DAYTIME RUN LTS DIODE D19 SEE P 9.1
C50
24-85-18
24-85P-18
R11
PARK.BRAKE SOL.VAL.
C51
24-91P-18
24-85D-18
R99
0-0-18
24-87B-16
24VI FROM ENGINE CTR. SW. SEE P.4.1
CB124
6A
24-290-16
24-290A-16
24-24F-14
24V POWER FROM RR. JCT. BOX SEE P. 1.1
D25
D24
C303
R78
R79
YEL/GRN
BRN
BLUE
F.C.
STEP 1
STEP 2
C426
C115
24-290-16
0-291-16
0-292-16
555-18
0-0C-14
563-18
TO ECM OUTPUT A2 FAN CONTROL*1 SEE P. 5.1
TO ECM OUTPUT W3 FAN CONTROL*2 SEE P. 5.1
291-16
TO RETARDER RELAY VIM 4 SEE P. 6.1
0-125W-18
C508
D83
RF1
WITH RETARDER OPTION
24-85-18
TO PARCEL RACK A/C FIRST SPEED RAD. FAN R34(87) SEE P. 15.1
0-291-16
0-0R-16
TIME DELAY RF3
RS18
75KΩ
TO PARCEL RACK A/C SECOND SPEED RAD. FAN PRESS. SW. SEE P. 15.1
0-292-16
292-16
C20
0-125-18
24-85F-18
RF2
0C-14
C549
C9
OPTIONAL SWITCH RADIATOR FAN CLUTCH OVERRIDE
0-292J-20
0-292-14
12-114B-18
12V POWER FROM CB57 SEE P. 11.2
0-0M5-14
0-0T1-18
114A-18
FROM RHEOSTAT DASH LTS SEE P. 11.2

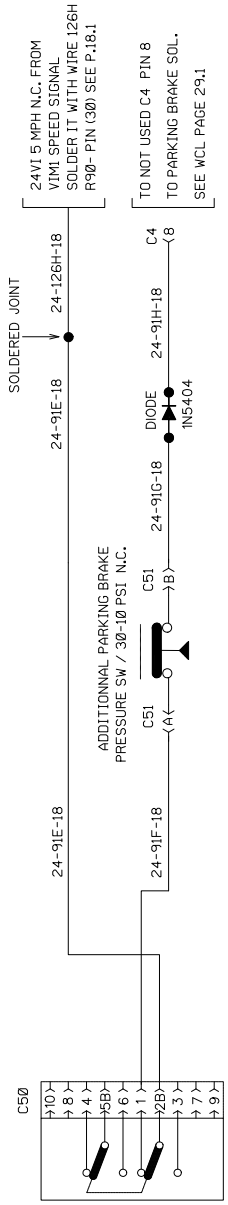

PARKING BRAKE
SAFETY SWITCH

PREVOST	WIRING DIAGRAM	NO: D060993	PAGE: **8.1sp1**	REVISION 02

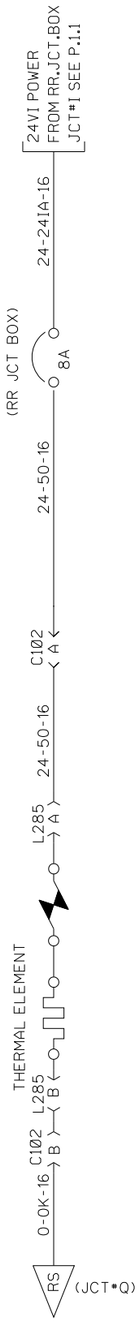

AIR DRYER

PREVOST	WIRING DIAGRAM	NO: D060993	PAGE: 8.1sp2	REVISION 00

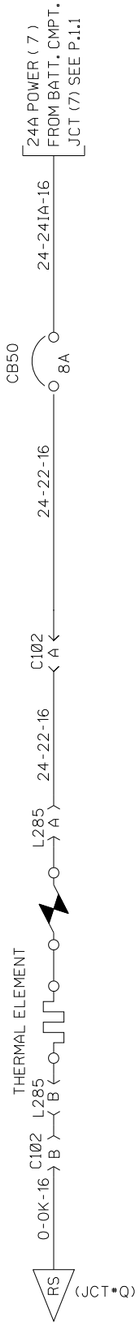

AIR DRYER

PREVOST	WIRING DIAGRAM	NO: D060993	PAGE: 8.1sp2	REVISION 18

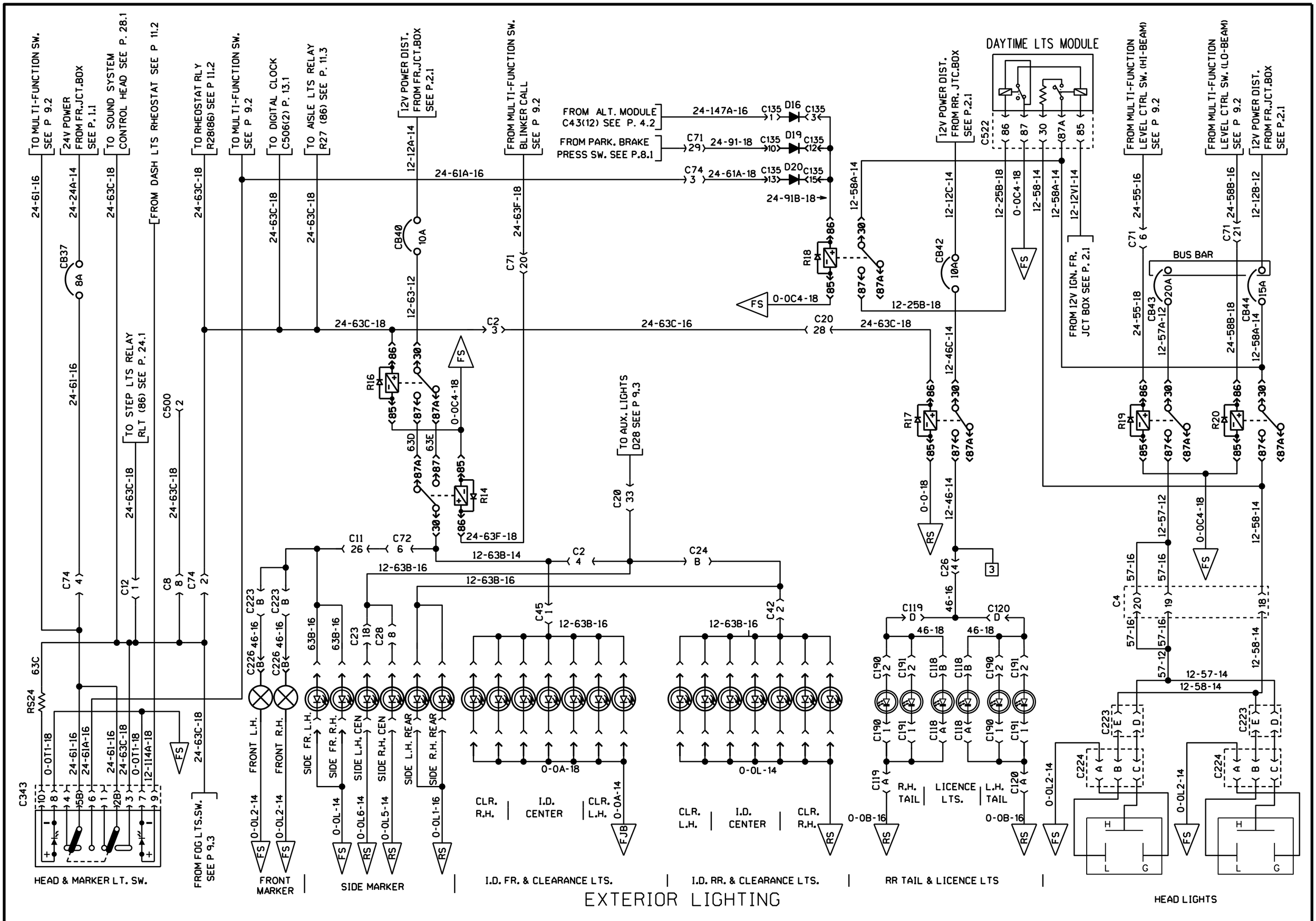

PREVOST	WIRING DIAGRAM	NO: D060993	PAGE: 9.1	REVISION 00

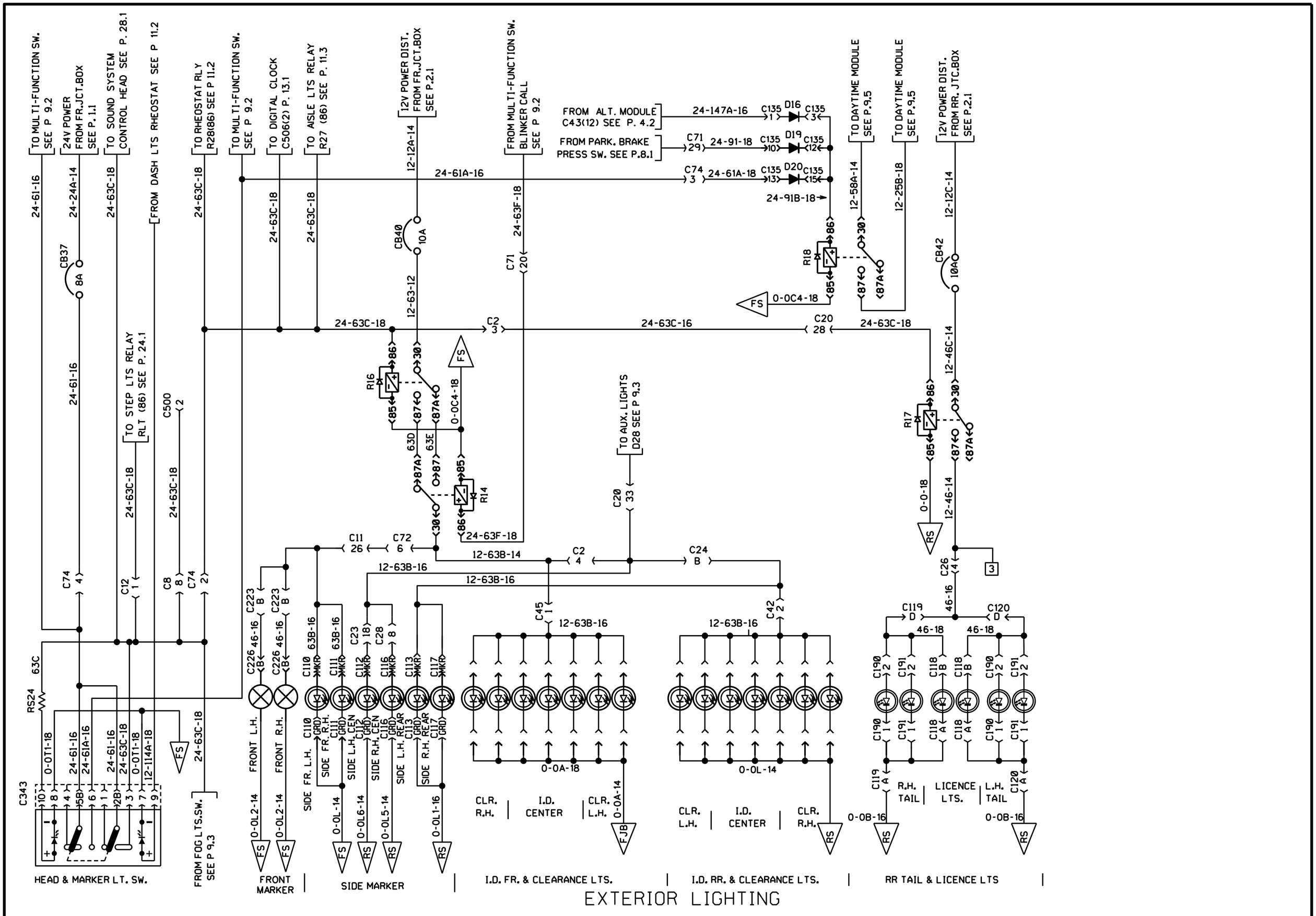

EXTERIOR LIGHTING

PREVOST	WIRING DIAGRAM	NO: D060993	PAGE: 9.1	REVISION 08

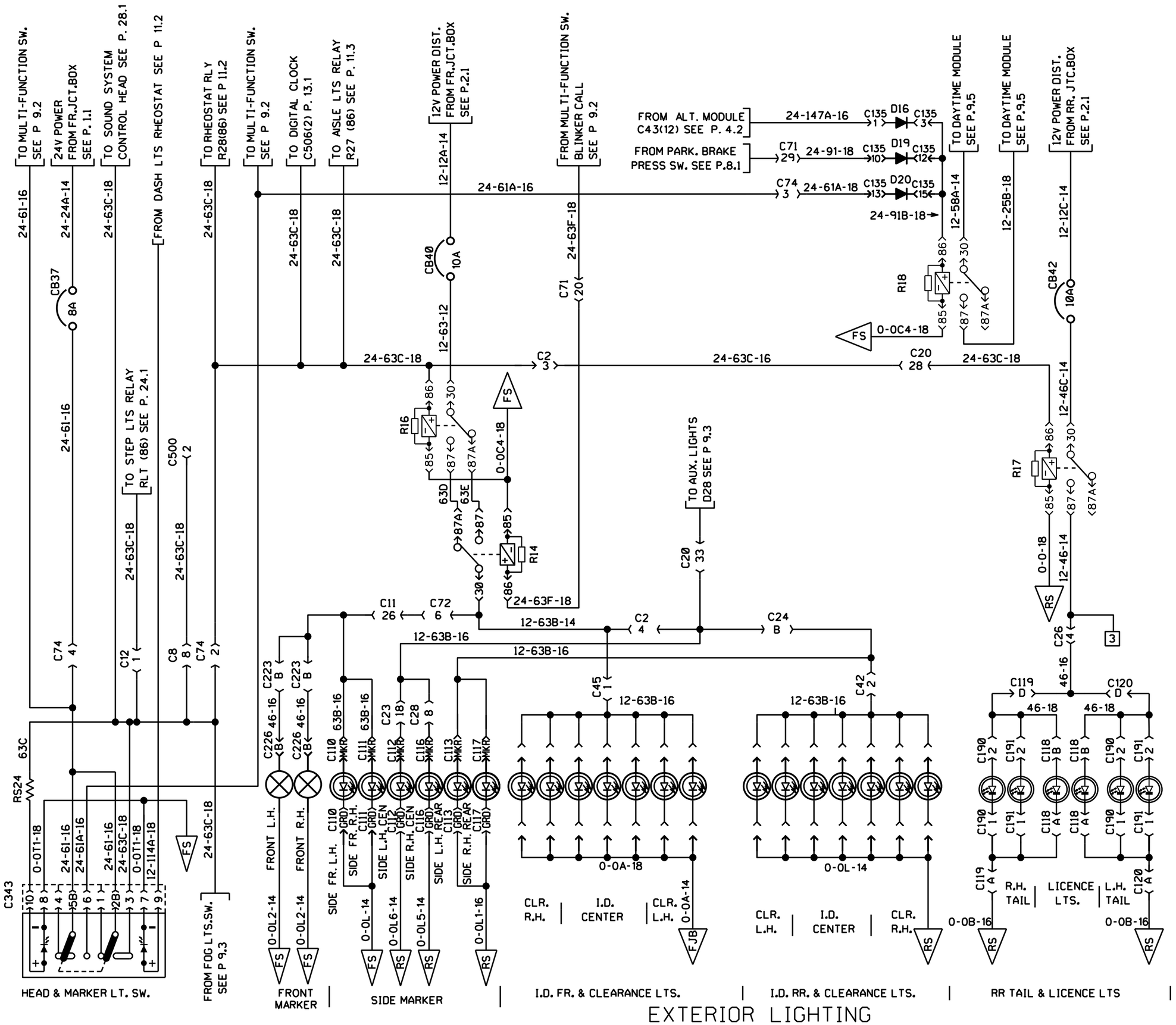

EXTERIOR LIGHTING

PREVOST	WIRING DIAGRAM	NO: D060993	PAGE: 9.1	REVISION 15

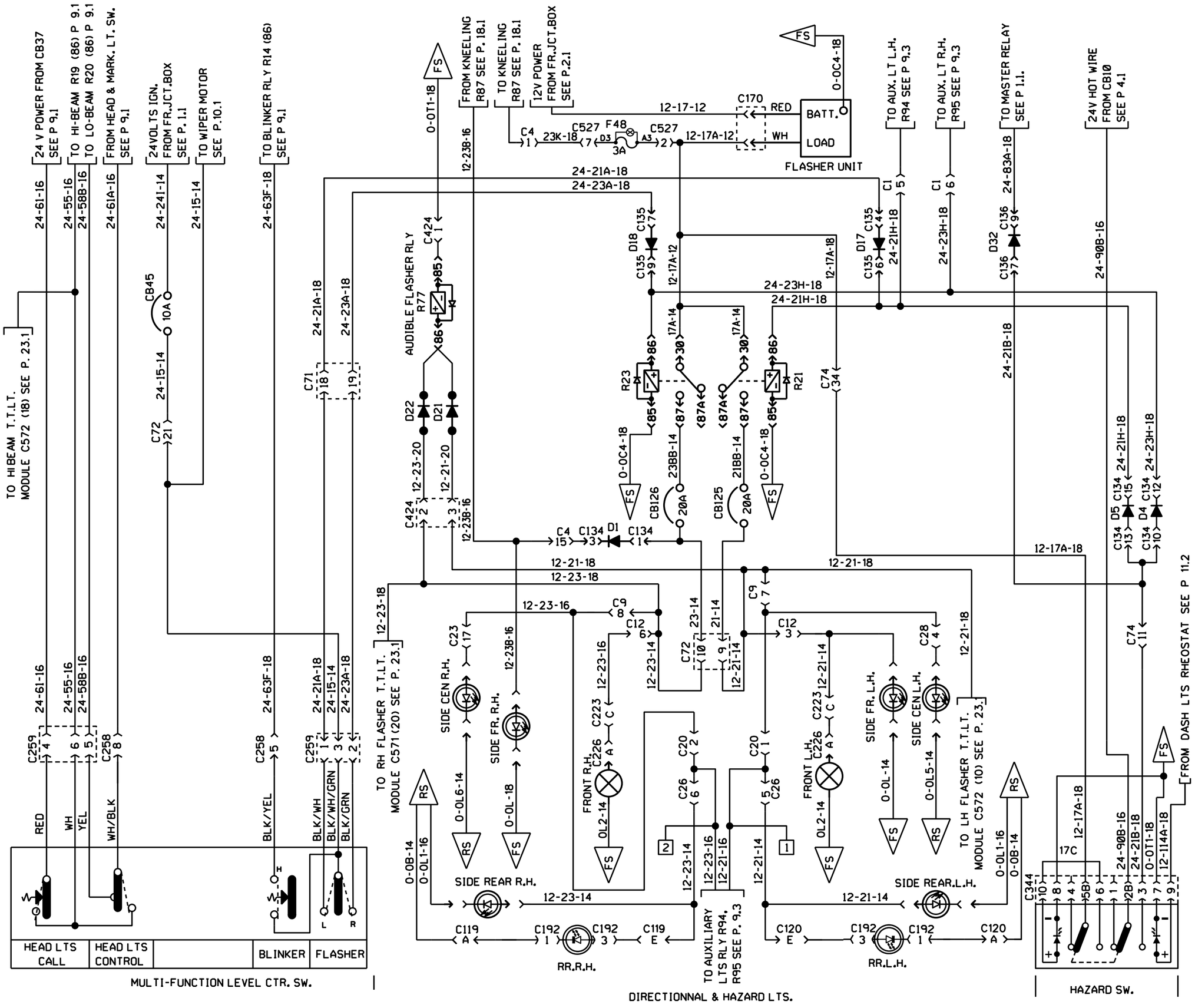

EXTERIOR LIGHTING

PREVOST	WIRING DIAGRAM	NO: D060993	PAGE: 9.2	REVISION 00

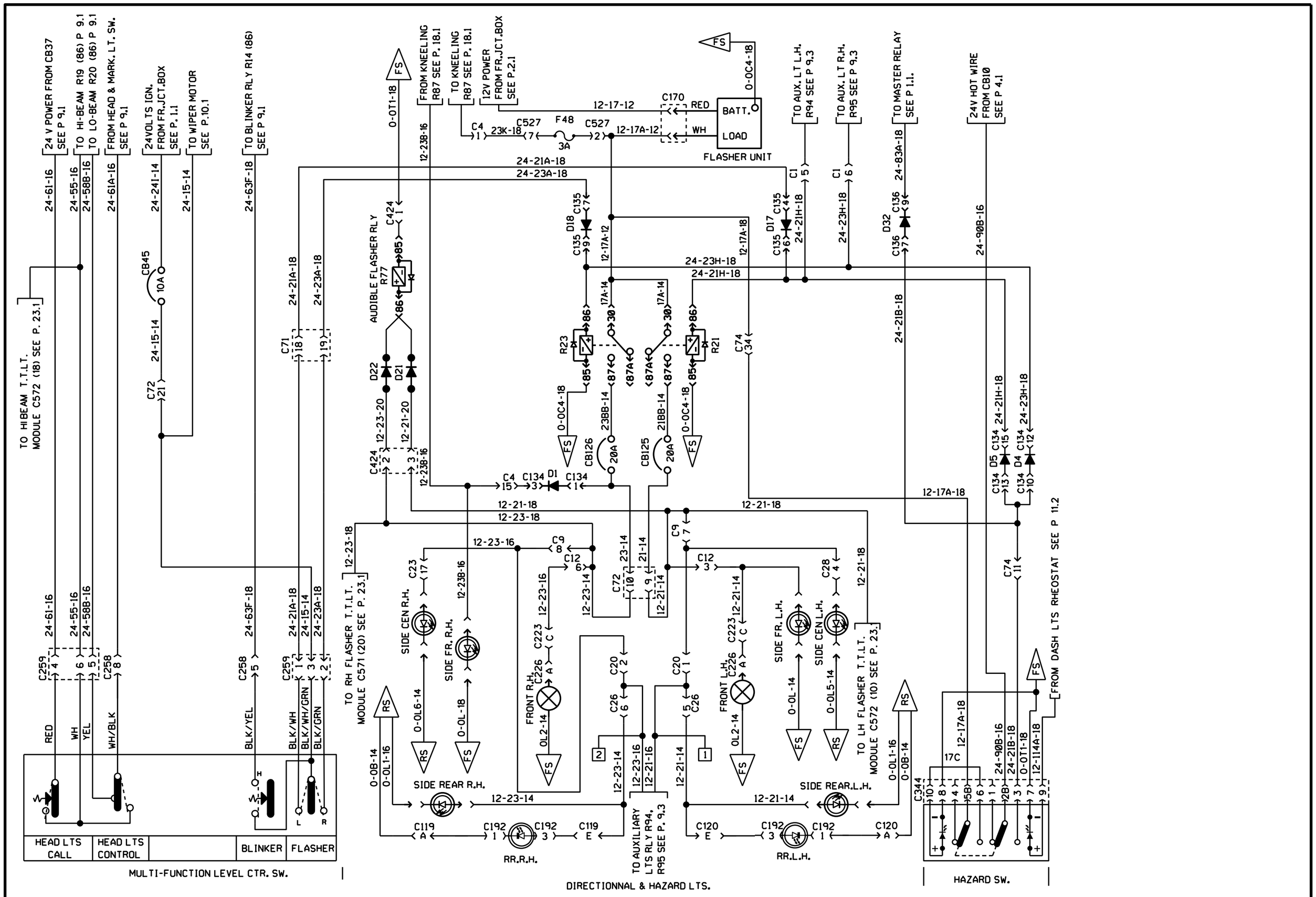

EXTERIOR LIGHTING

PREVOST	WIRING DIAGRAM	NO: D060993	PAGE: 9.2	REVISION 05

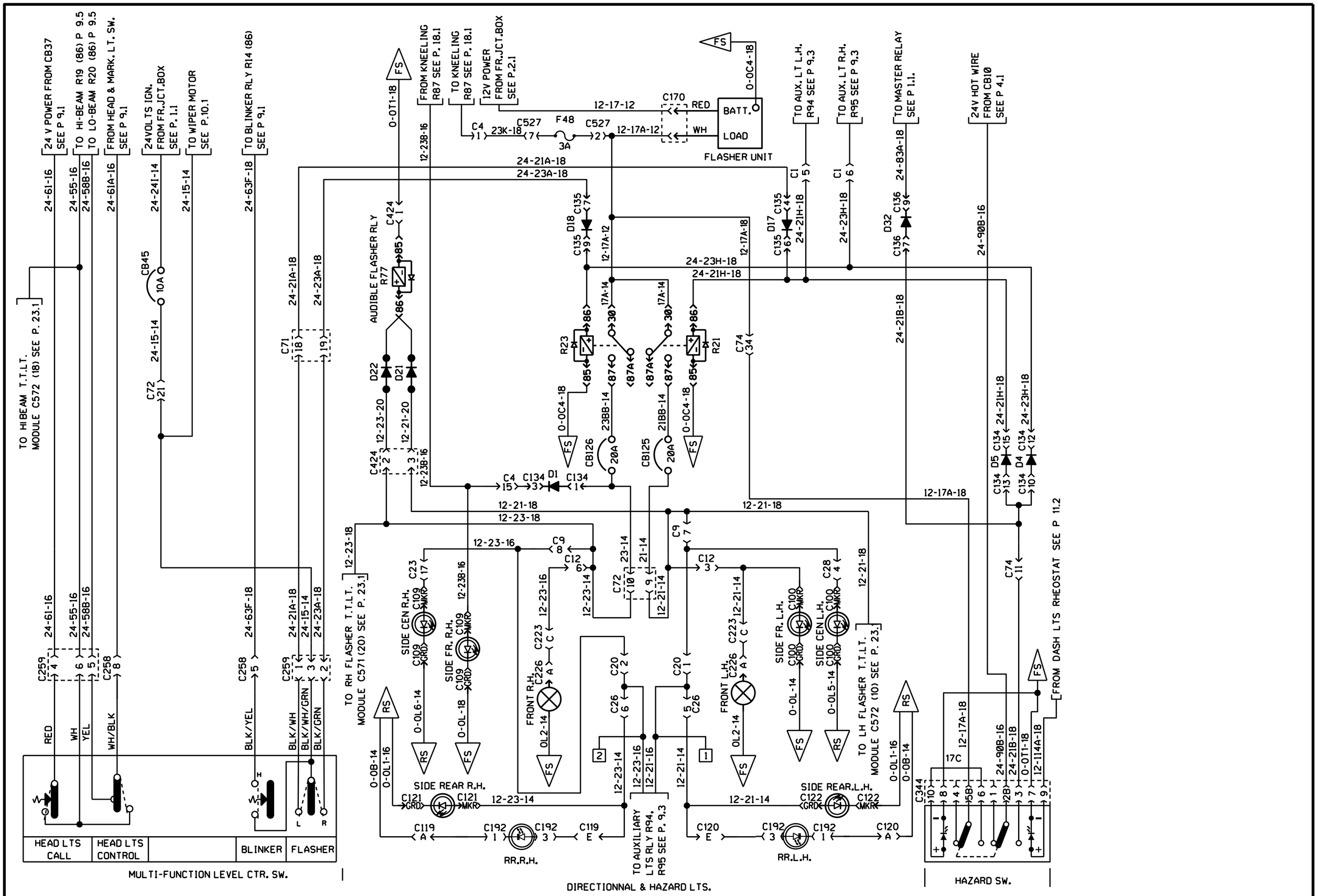

EXTERIOR LIGHTING

PREVOST	WIRING DIAGRAM	NO: D060993	PAGE: 9.2	REVISION 08

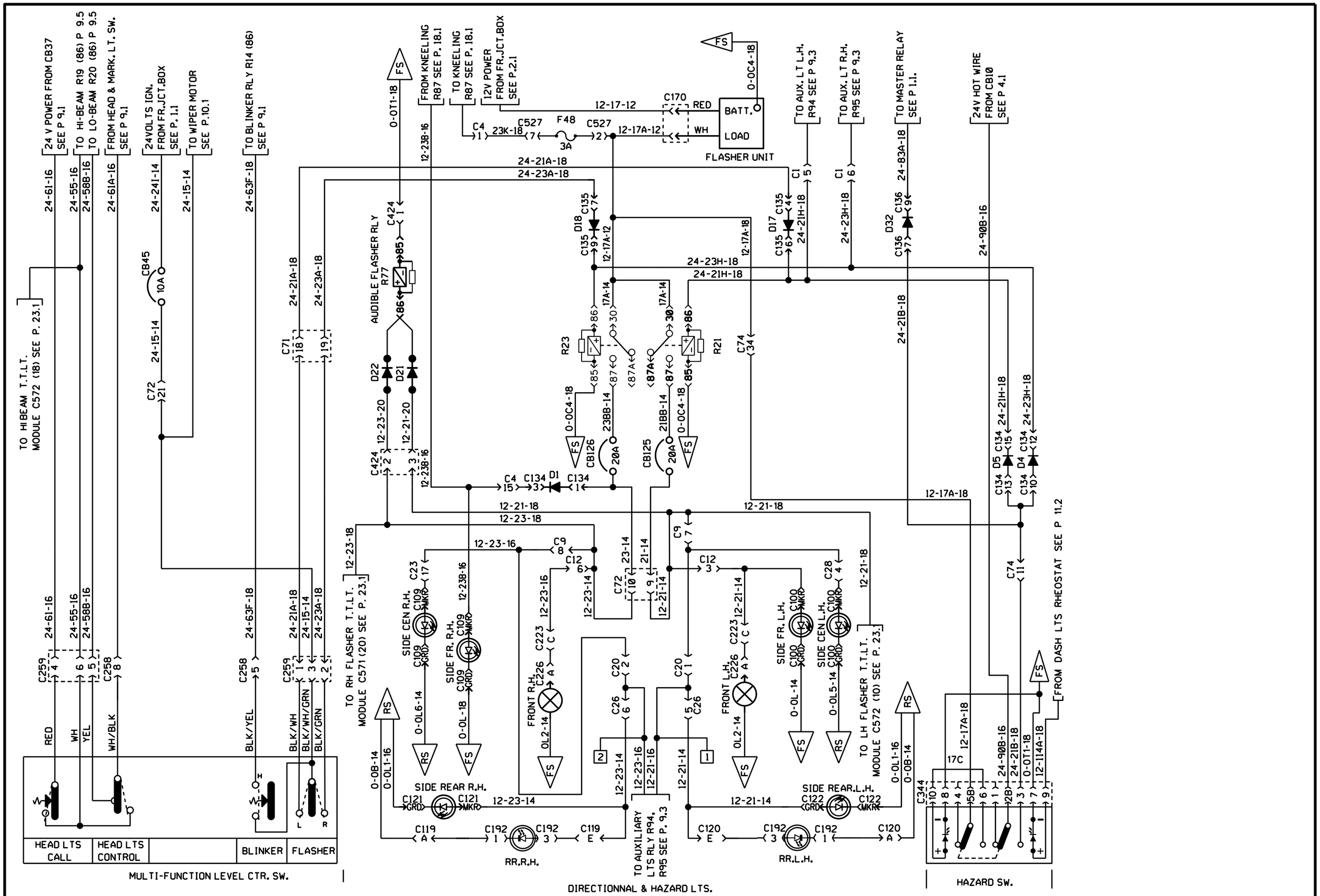

EXTERIOR LIGHTING

PREVOST	WIRING DIAGRAM	NO: D060993	PAGE: 9.2	REVISION 15

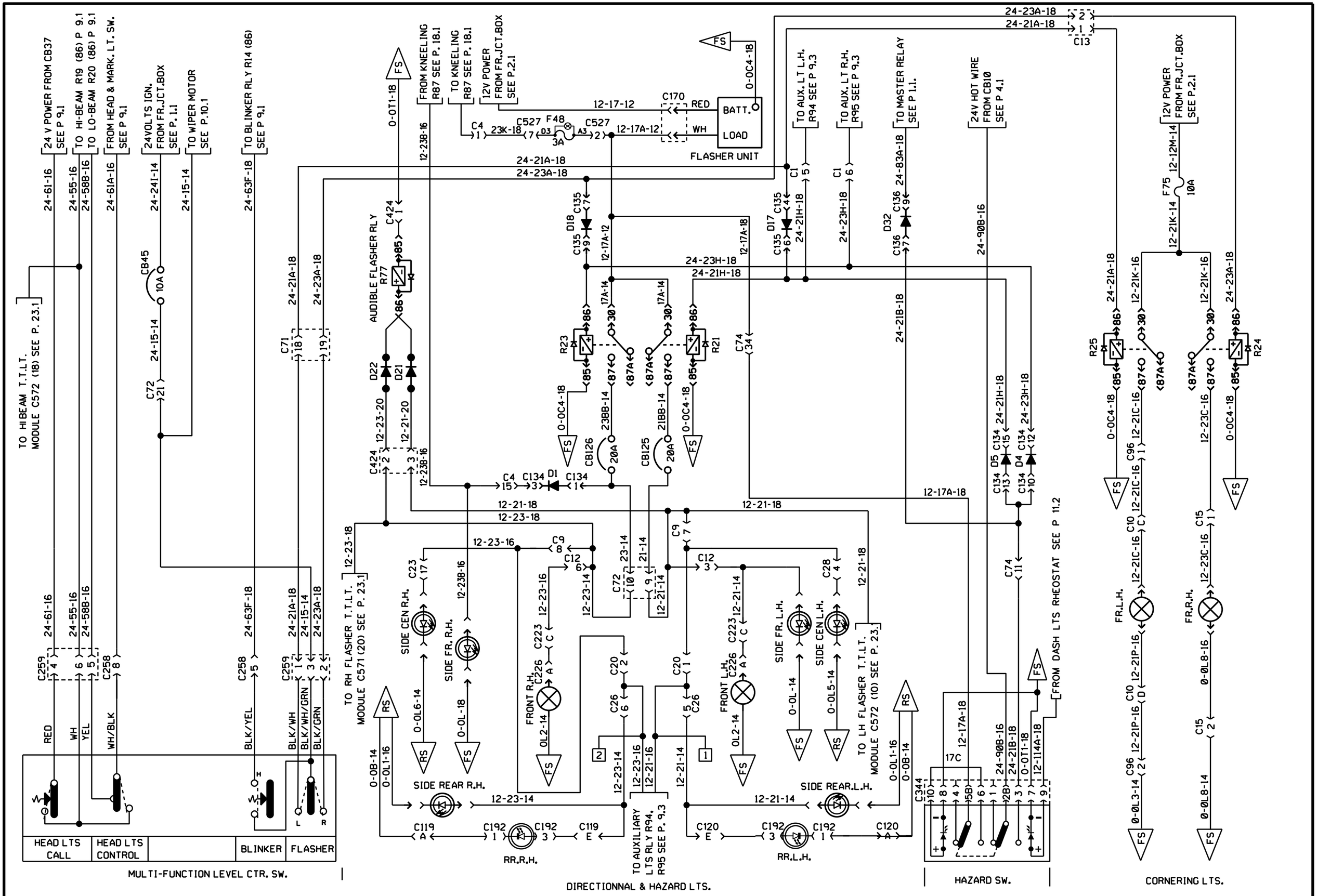

EXTERIOR LIGHTING

PREVOST	WIRING DIAGRAM	NO: D060993	PAGE: 9.2 sp1	REVISION 00

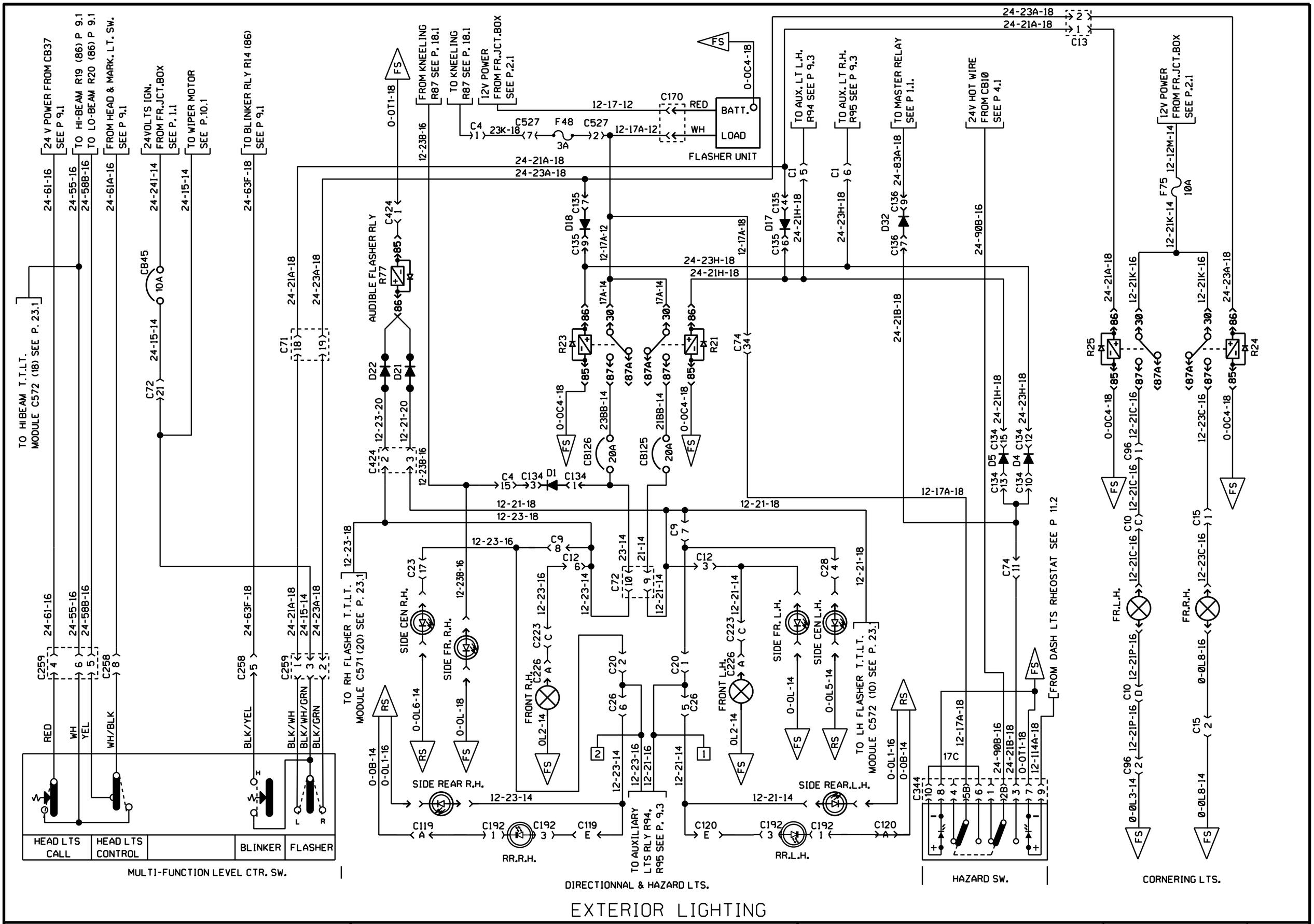

EXTERIOR LIGHTING

PREVOST	WIRING DIAGRAM	NO: D060993	PAGE: 9.2 sp1	REVISION 05

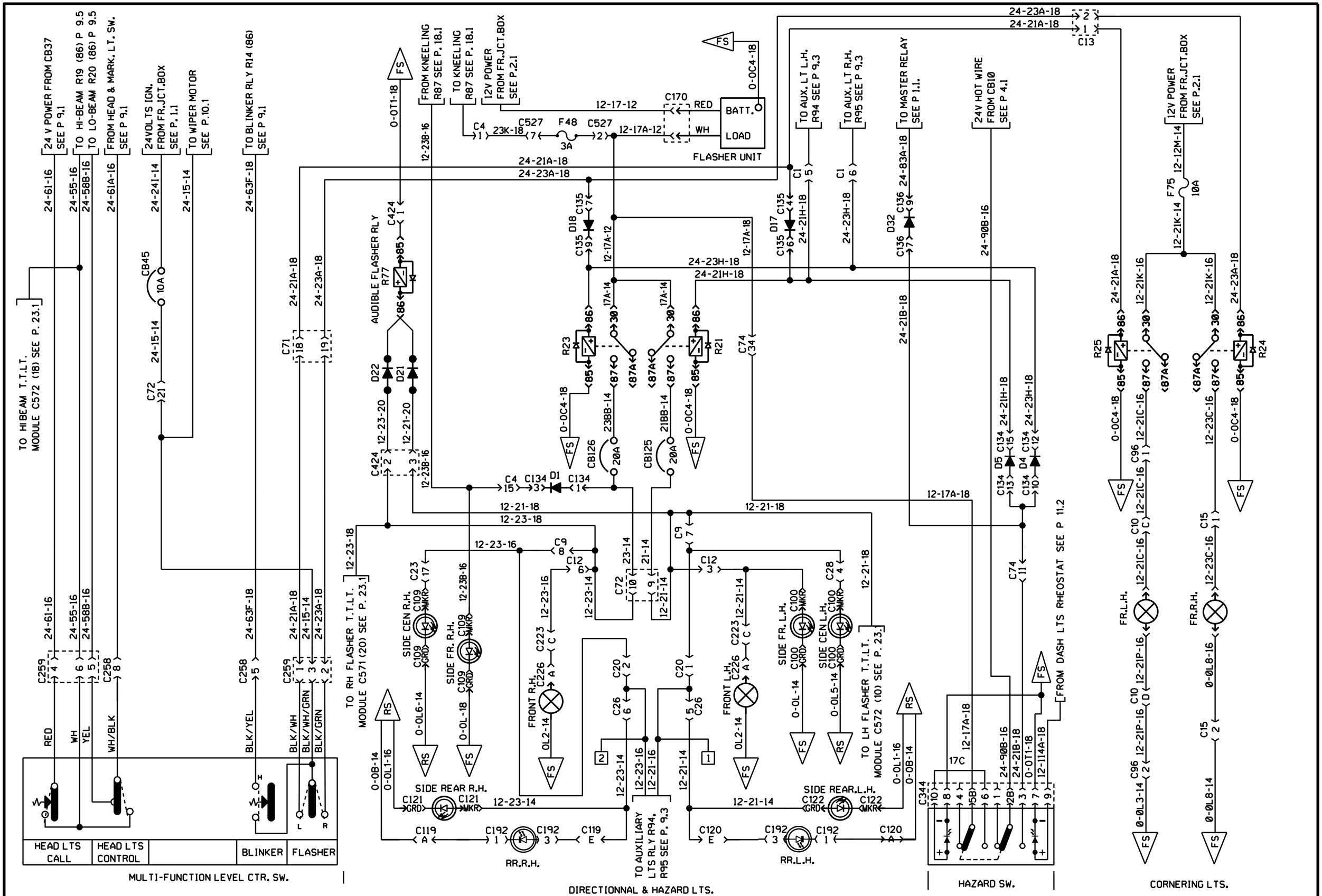

EXTERIOR LIGHTING

PREVOST	WIRING DIAGRAM	NO: D060993	PAGE: 9.2 sp1	REVISION 08

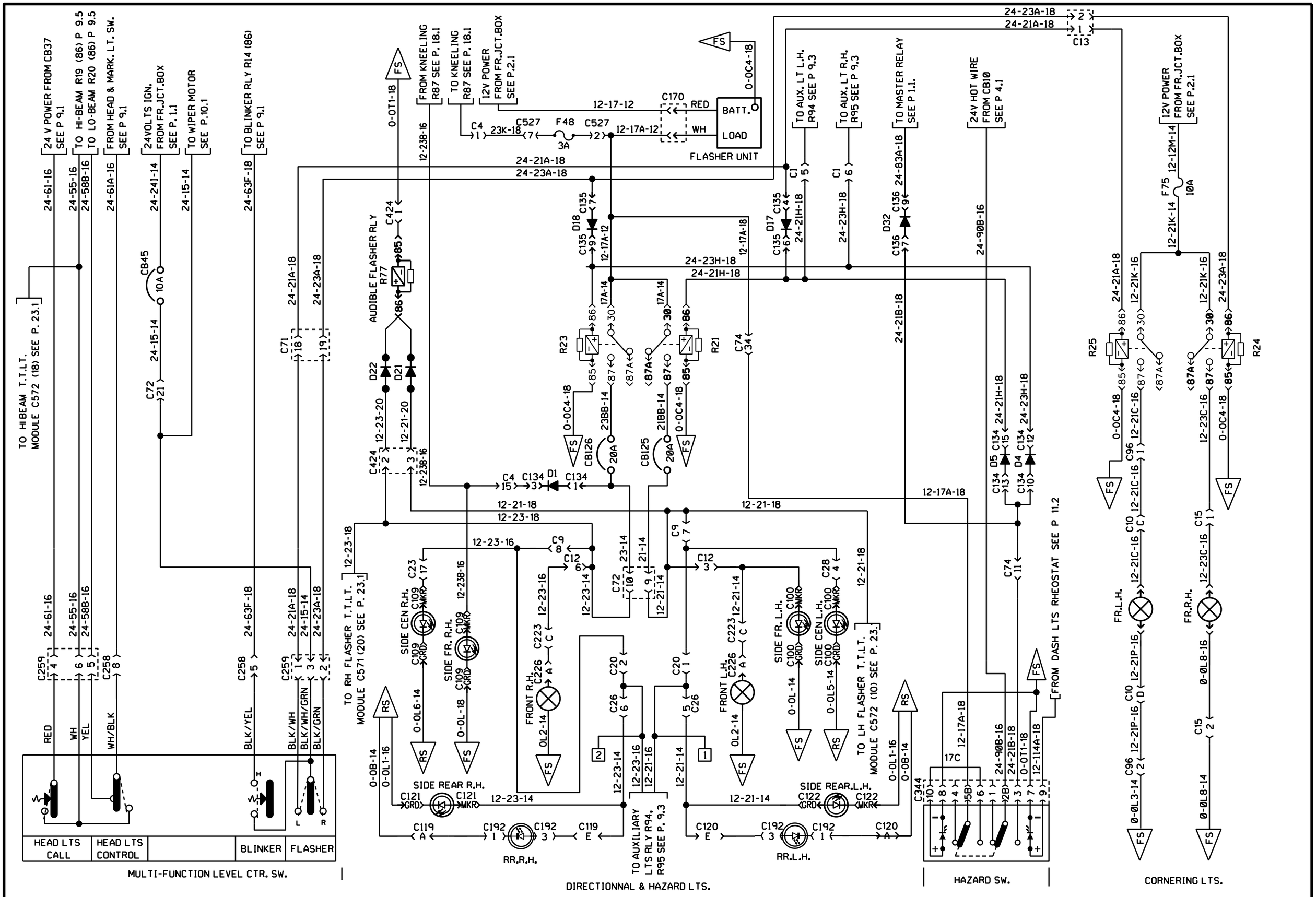

EXTERIOR LIGHTING

PREVOST	WIRING DIAGRAM	NO: D060993	PAGE: 9.2 sp1	REVISION 15

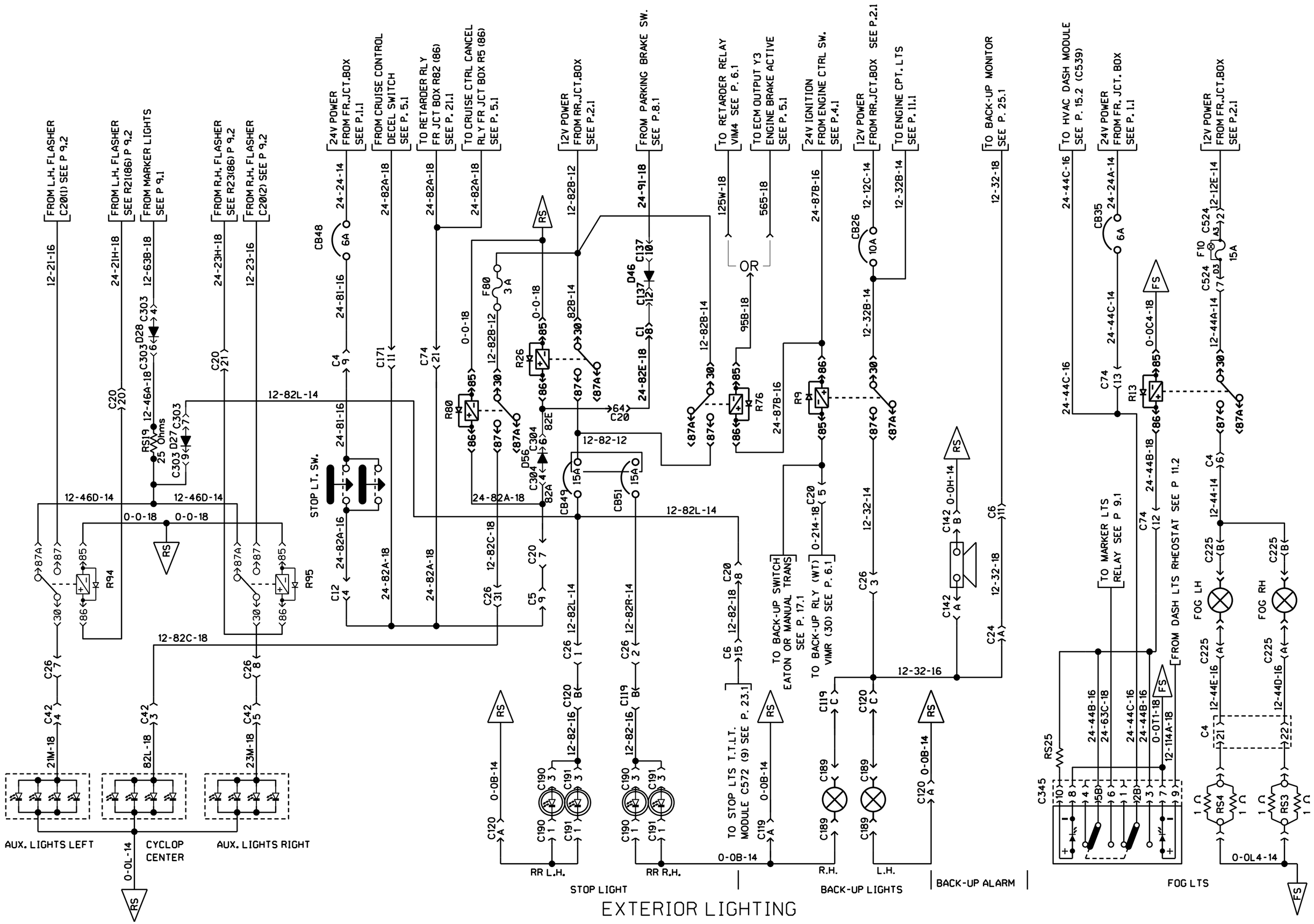

EXTERIOR LIGHTING

PREVOST	WIRING DIAGRAM	NO: D060993	PAGE: 9.3	REVISION 00

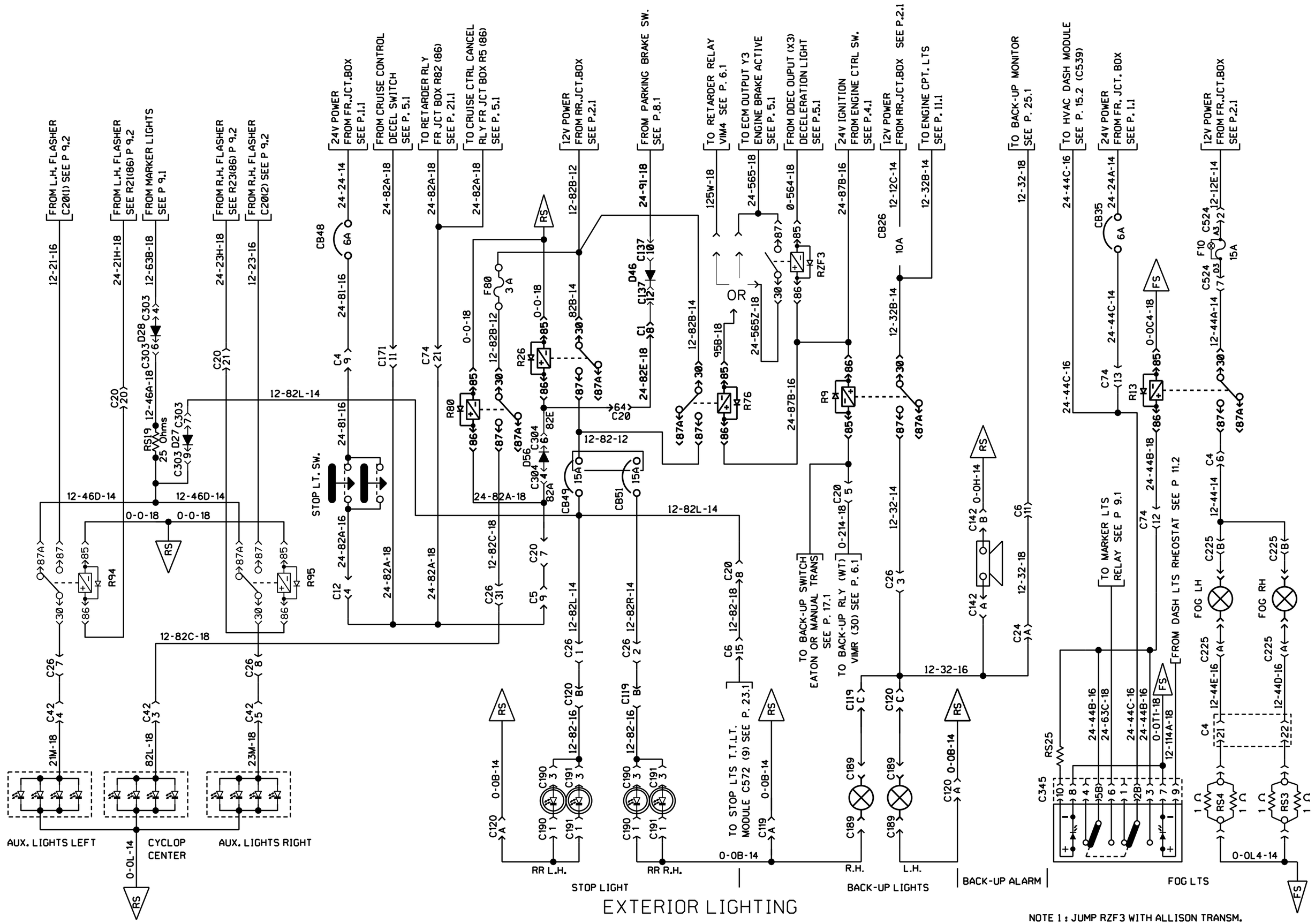

PREVOST	WIRING DIAGRAM	NO: D060993	PAGE: 9.3	REVISION 01

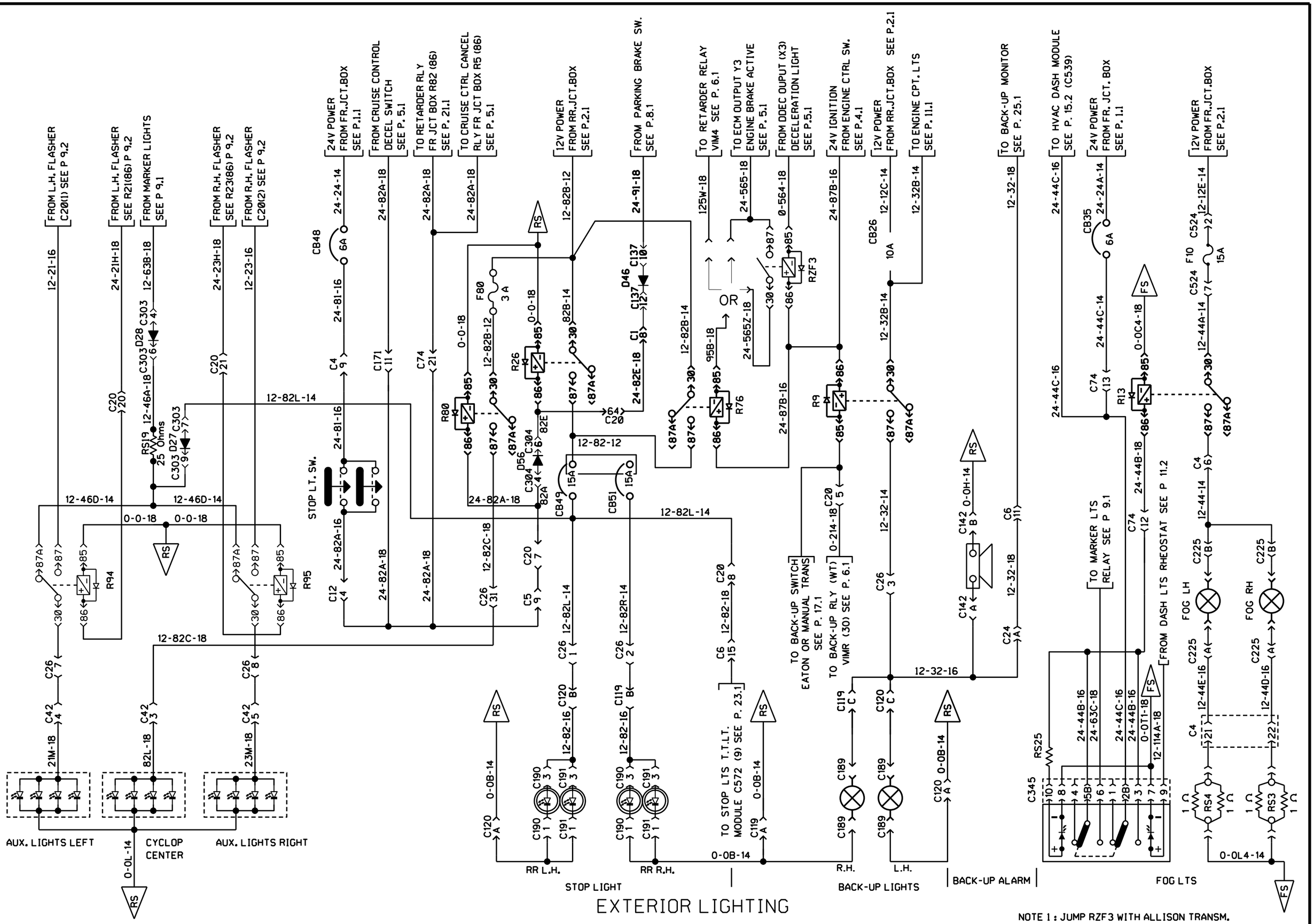

EXTERIOR LIGHTING

NOTE 1 : JUMP RZF3 WITH ALLISON TRANSM.

PREVOST	WIRING DIAGRAM	NO: D060993	PAGE: 9.3	REVISION 05

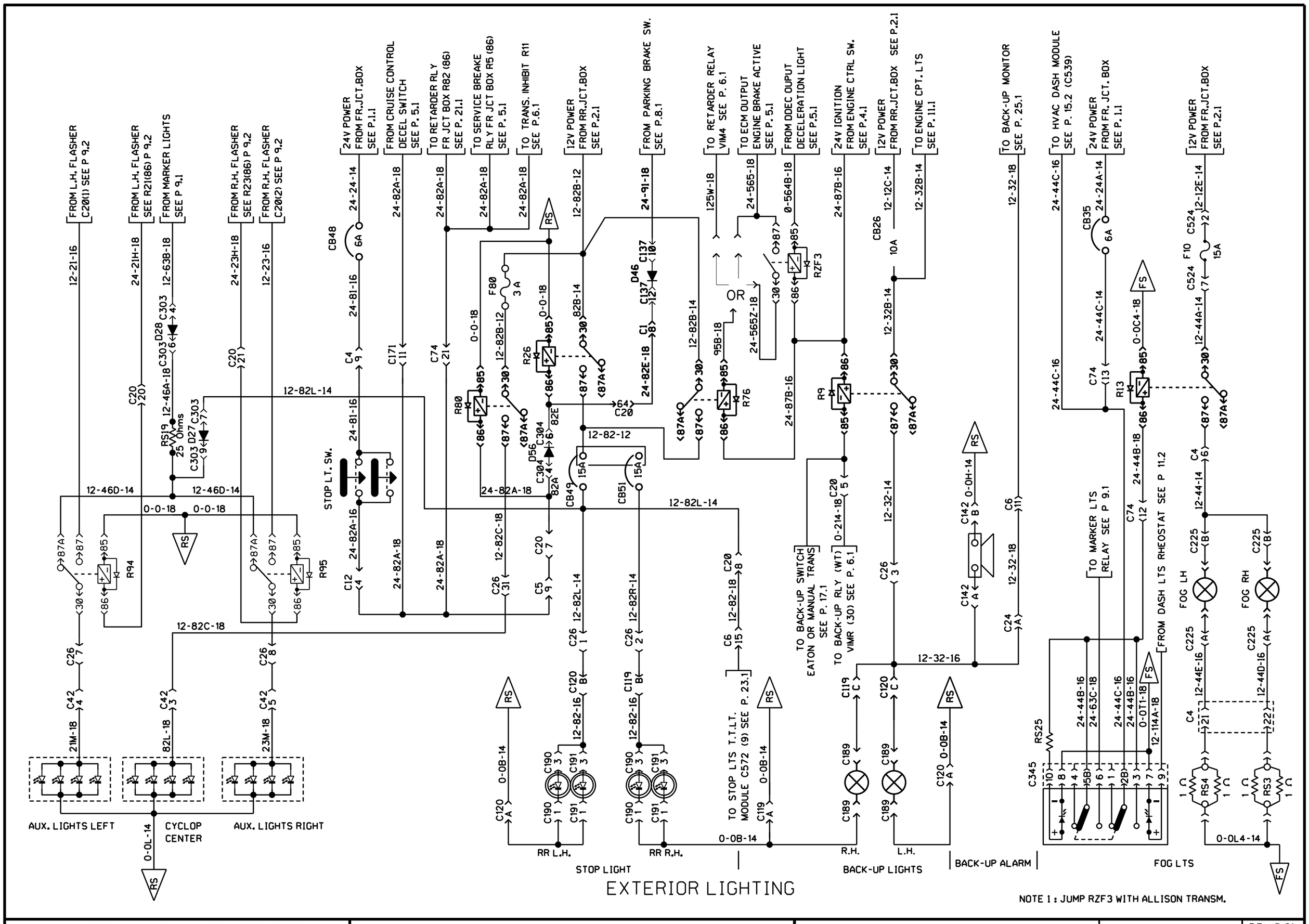

PREVOST	WIRING DIAGRAM	NO: D060993	PAGE: 9.3	REVISION 08

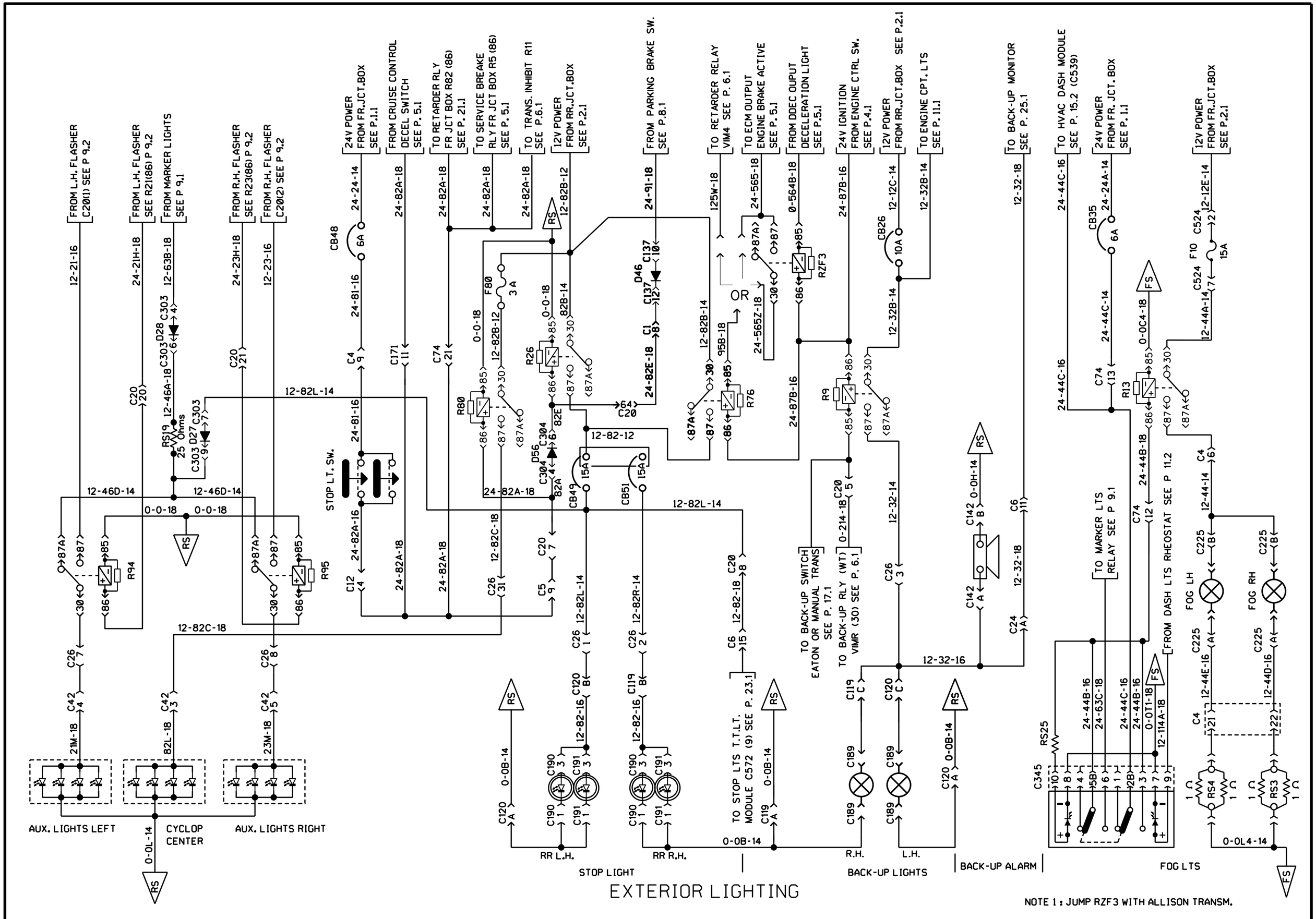

PREVOST	WIRING DIAGRAM	NO: D060993	PAGE: 9.3	REVISION 15

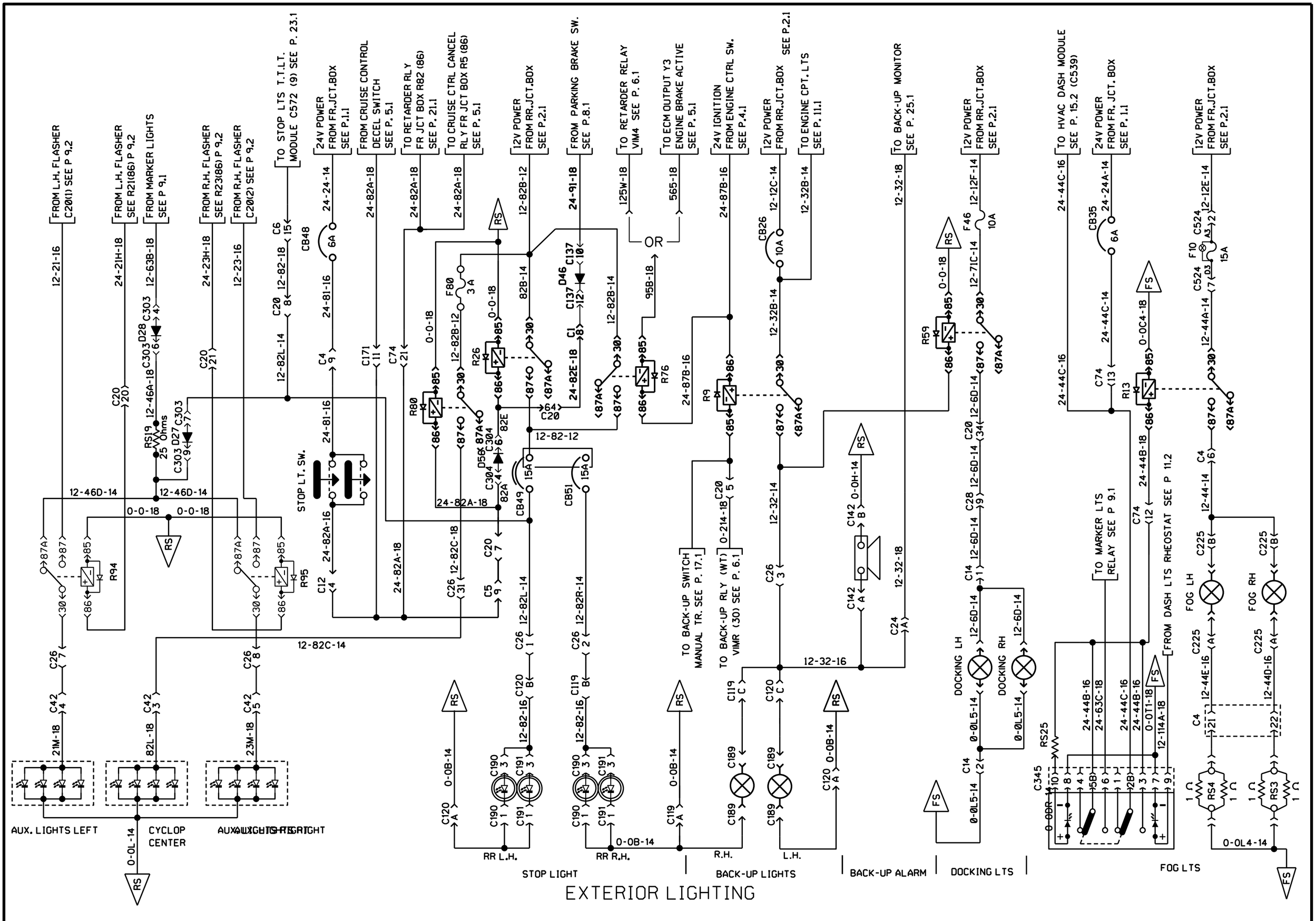

EXTERIOR LIGHTING

PREVOST	WIRING DIAGRAM	NO: D060993	PAGE: 9.3sp1	REVISION 00

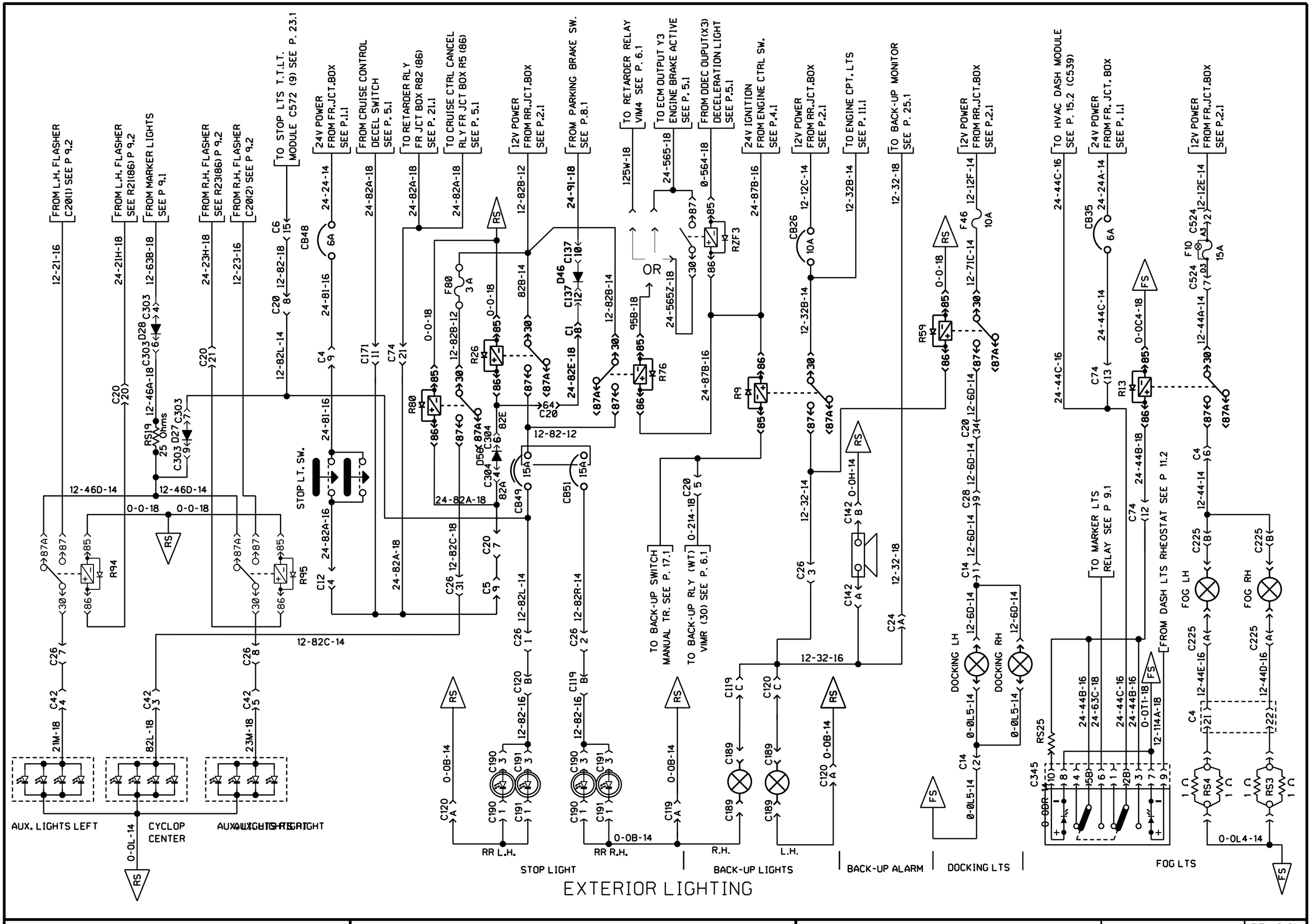

EXTERIOR LIGHTING

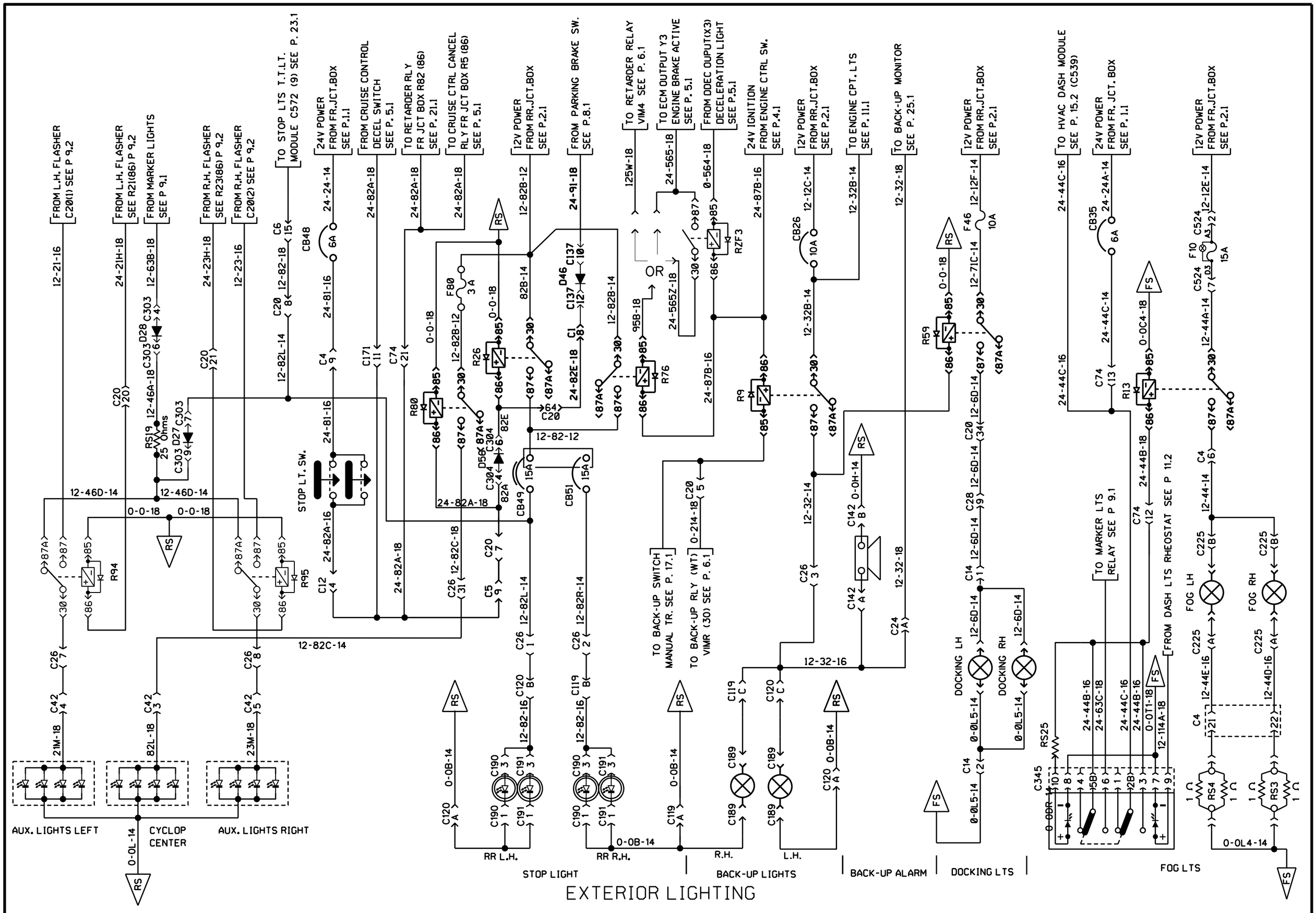

EXTERIOR LIGHTING

PREVOST	WIRING DIAGRAM	NO: D060993	PAGE: 9.3sp1	REVISION 02

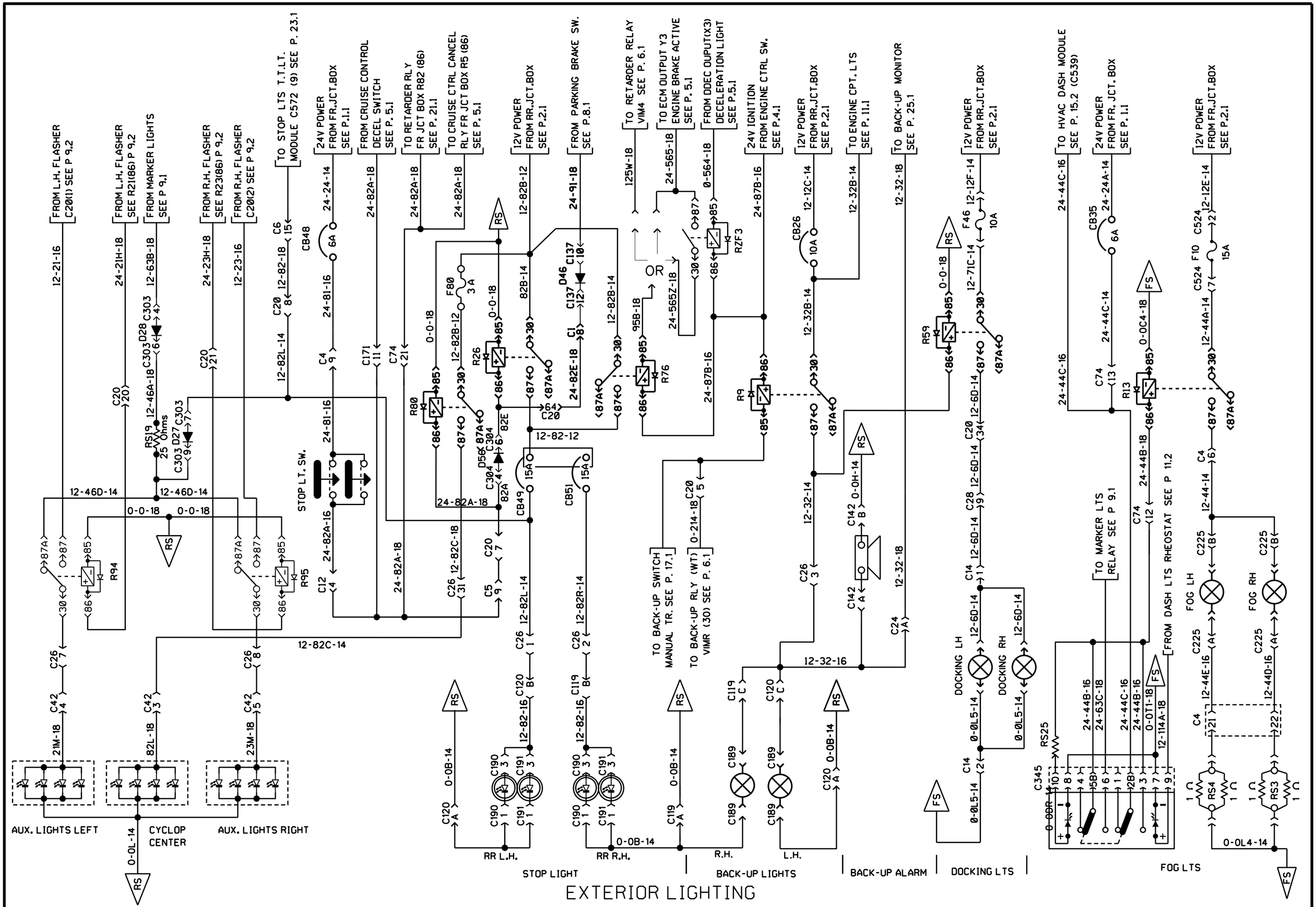

EXTERIOR LIGHTING

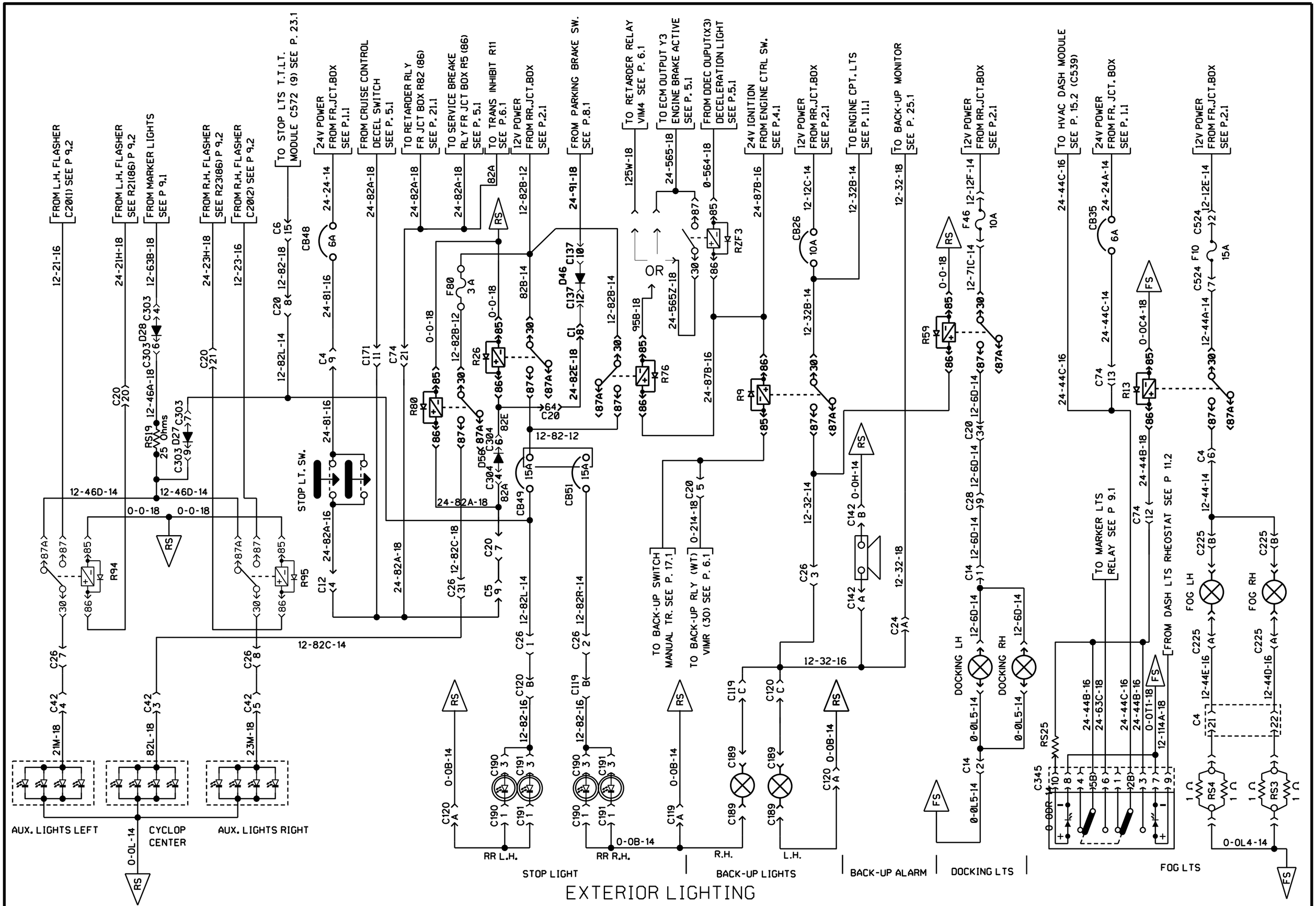

EXTERIOR LIGHTING

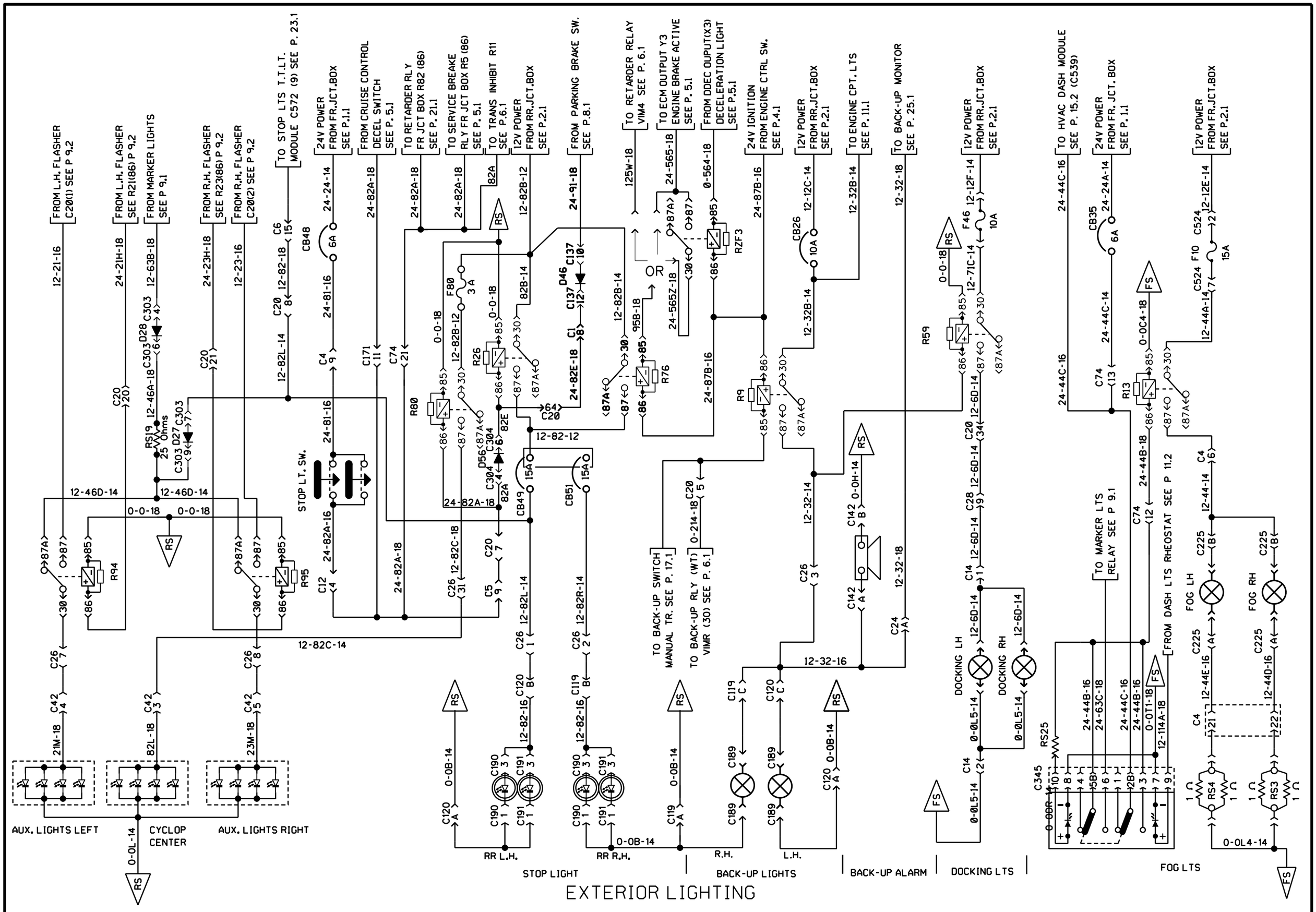

EXTERIOR LIGHTING

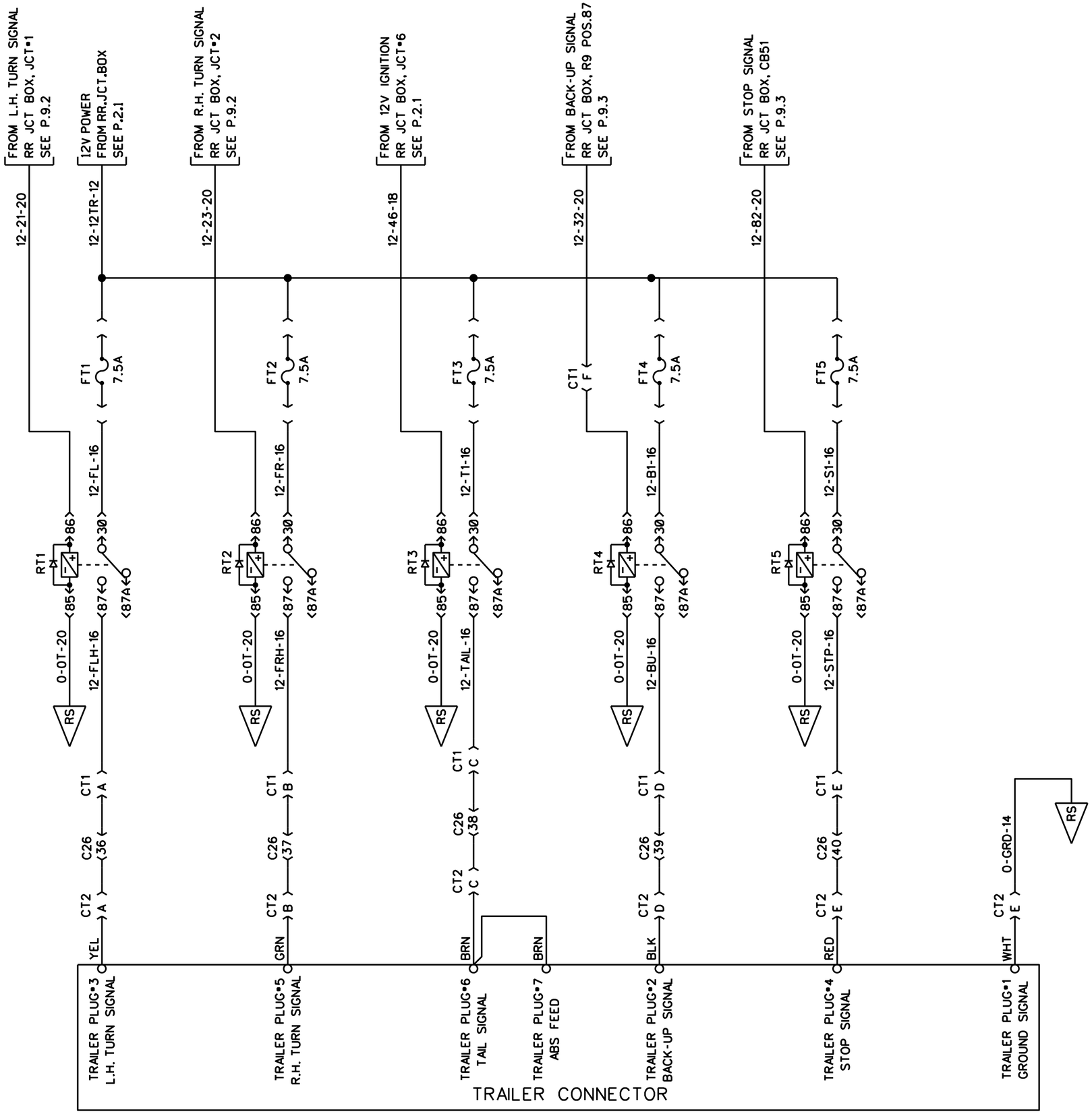

EXTERIOR TRAILER LIGHTING

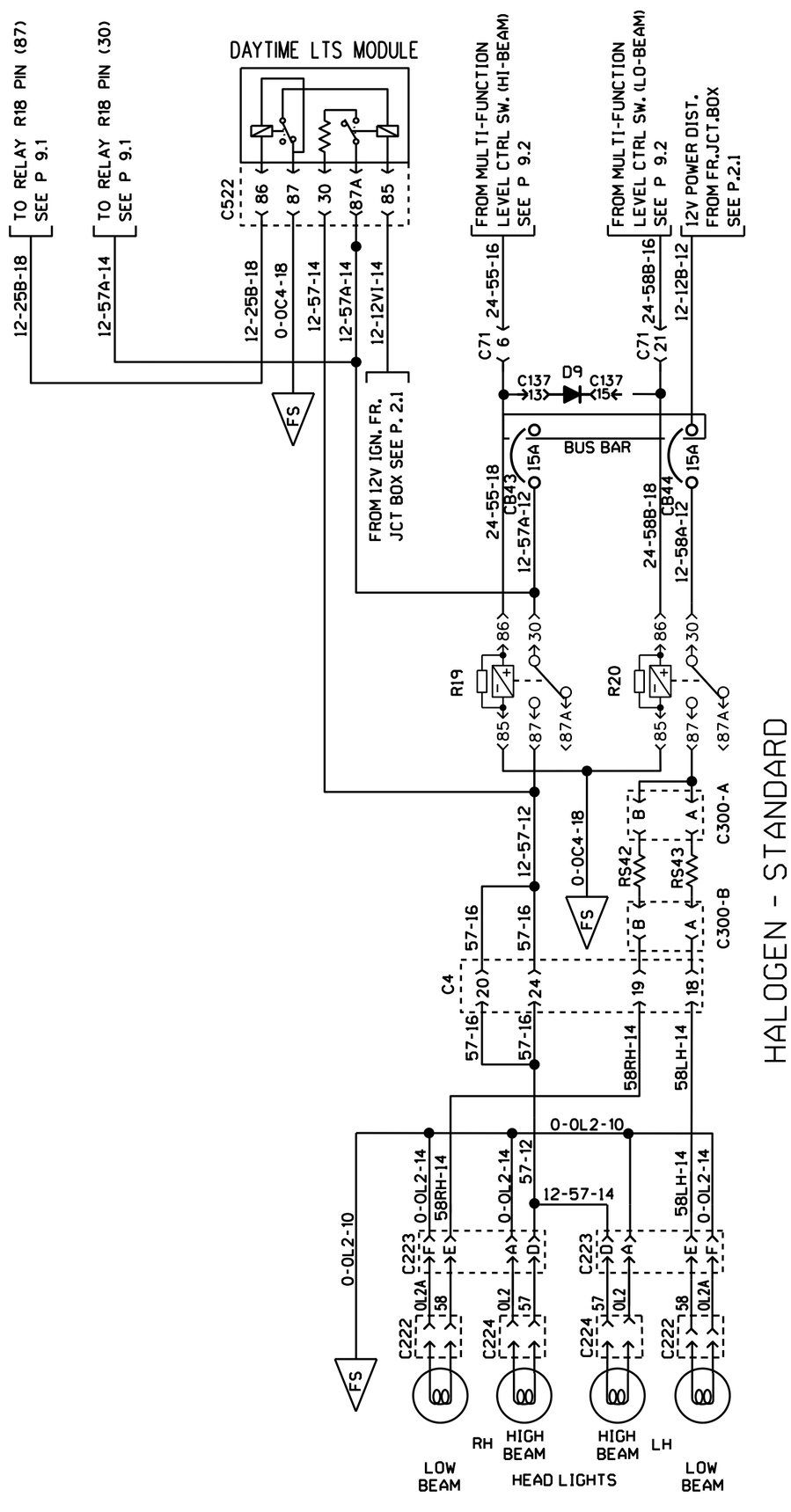

HALOGEN - STANDARD

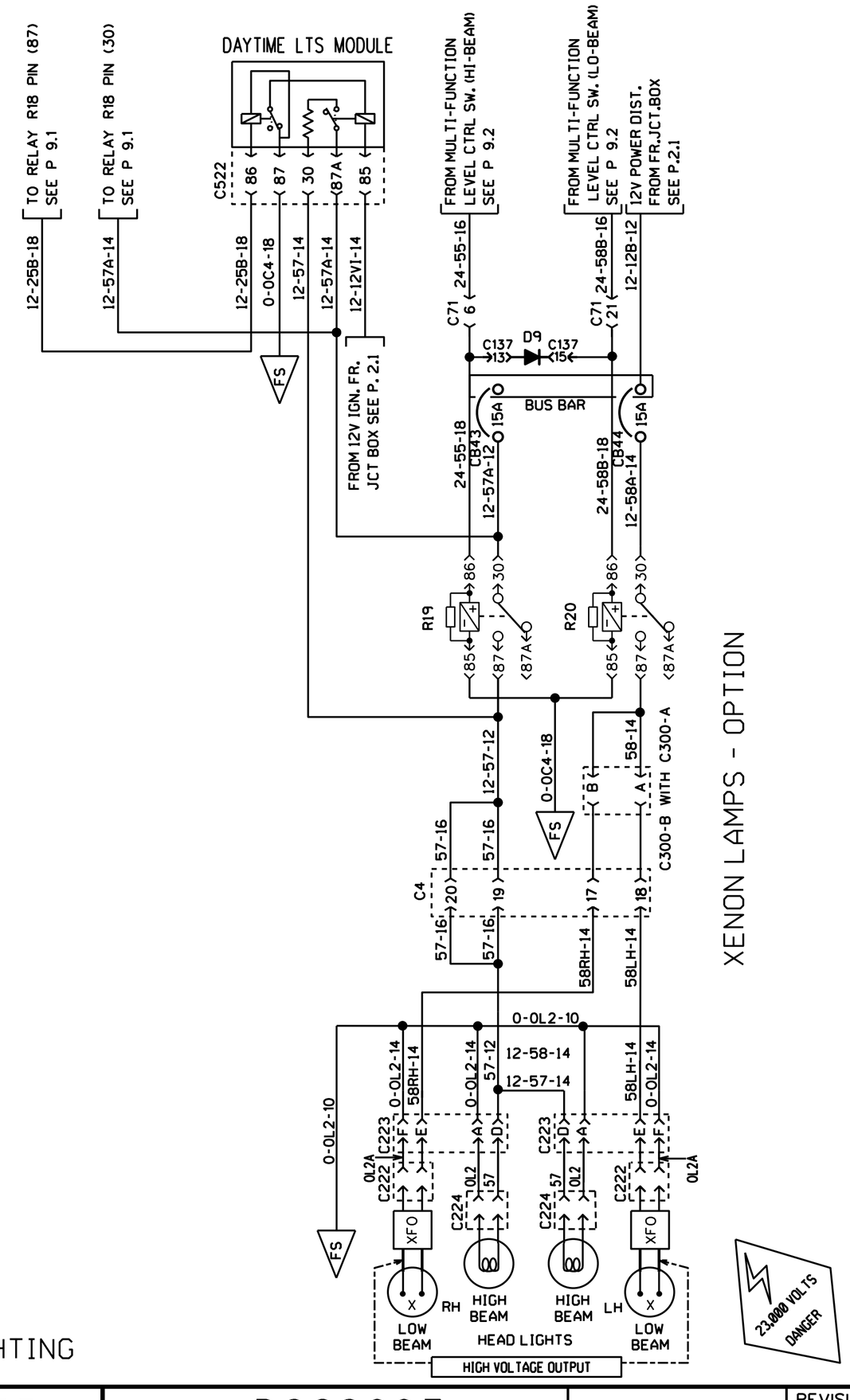

XENON LAMPS - OPTION

EXTERIOR LIGHTING

PREVOST	WIRING DIAGRAM	NO: D060993	PAGE: 9.5	REVISION 15

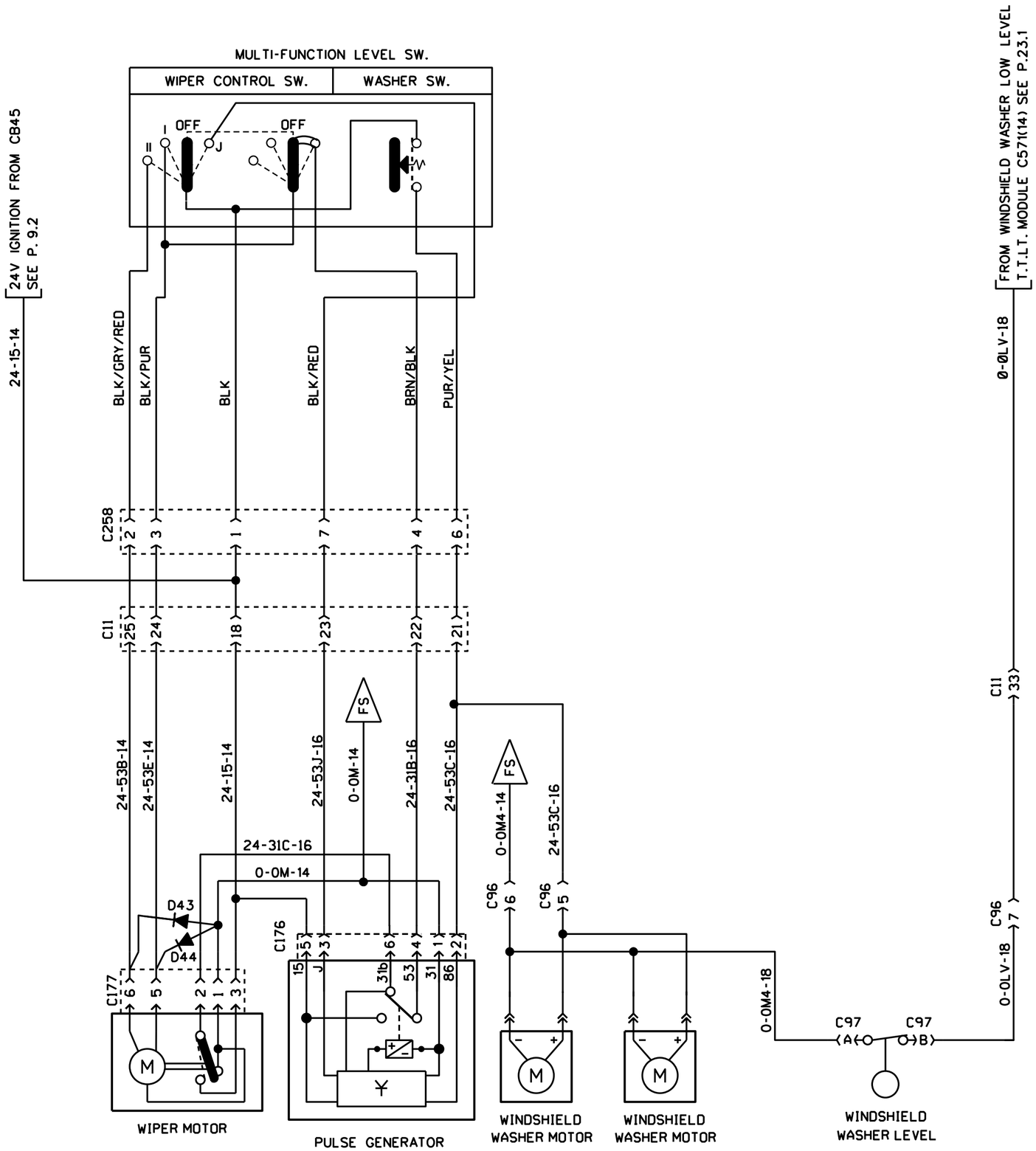

WINDSHIELD WIPER AND WASHER

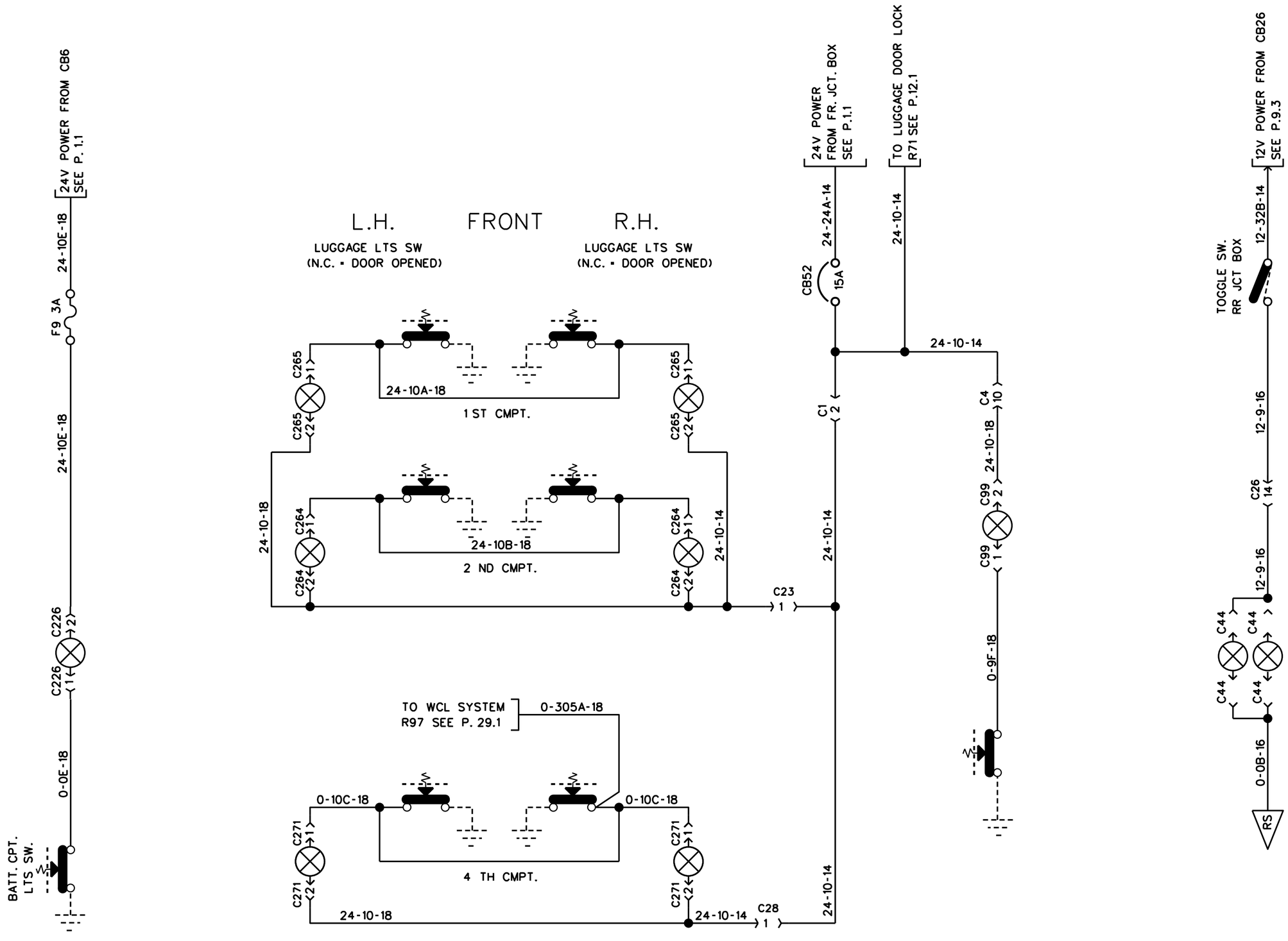

BATT. COMPT. LT. | LUGGAGE COMPARTMENT LTS. | FR. SERV. CPT. LT. | ENGINE COMPT. LTS.

INTERIOR LIGHTING

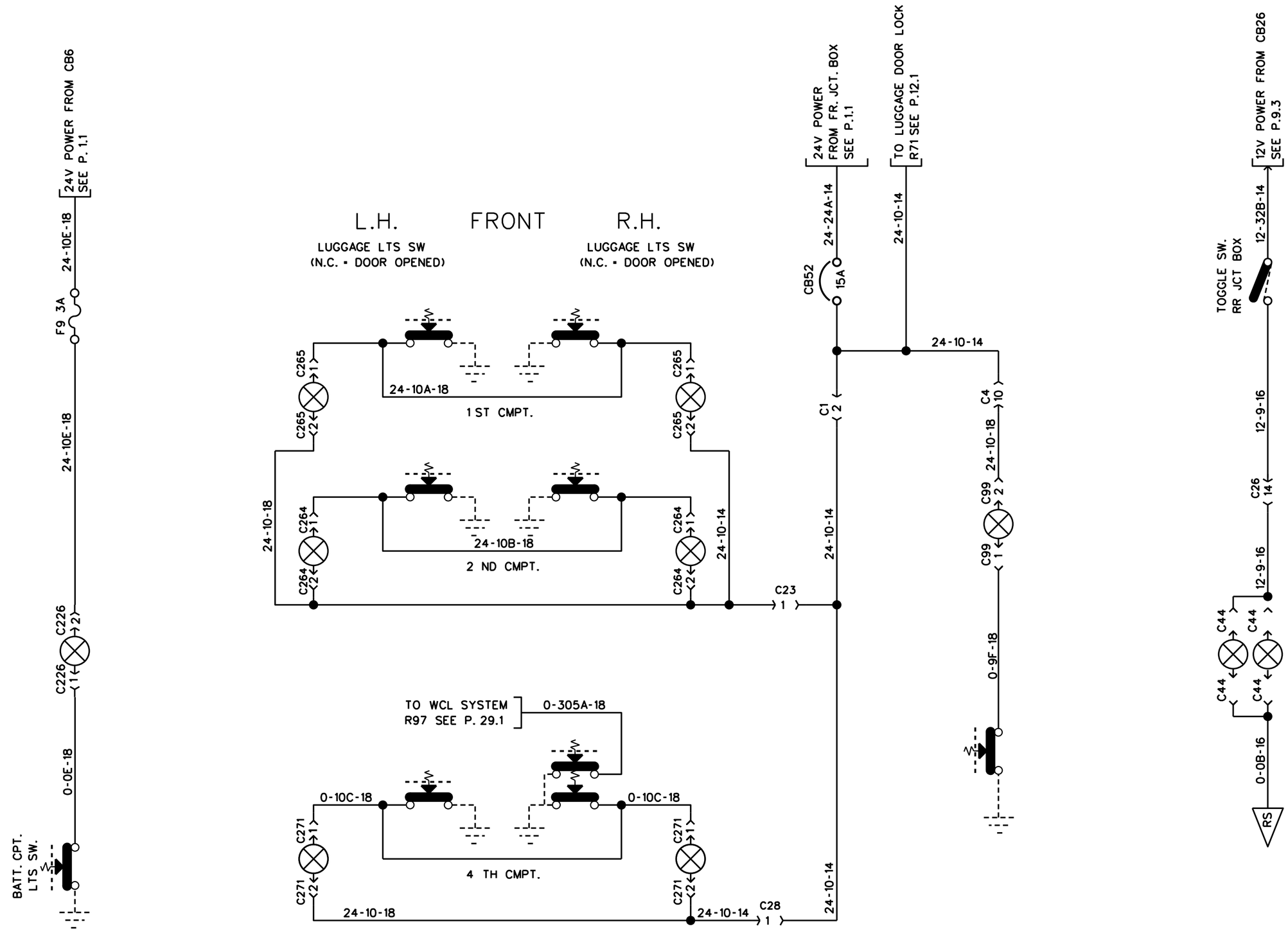

BATT. COMPT. LT. | LUGGAGE COMPARTMENT LTS. | FR. SERV. CPT. LT. | ENGINE COMPT. LTS.

INTERIOR LIGHTING

PREVOST	WIRING DIAGRAM	NO: D060993	PAGE: 11.1	REVISION 05

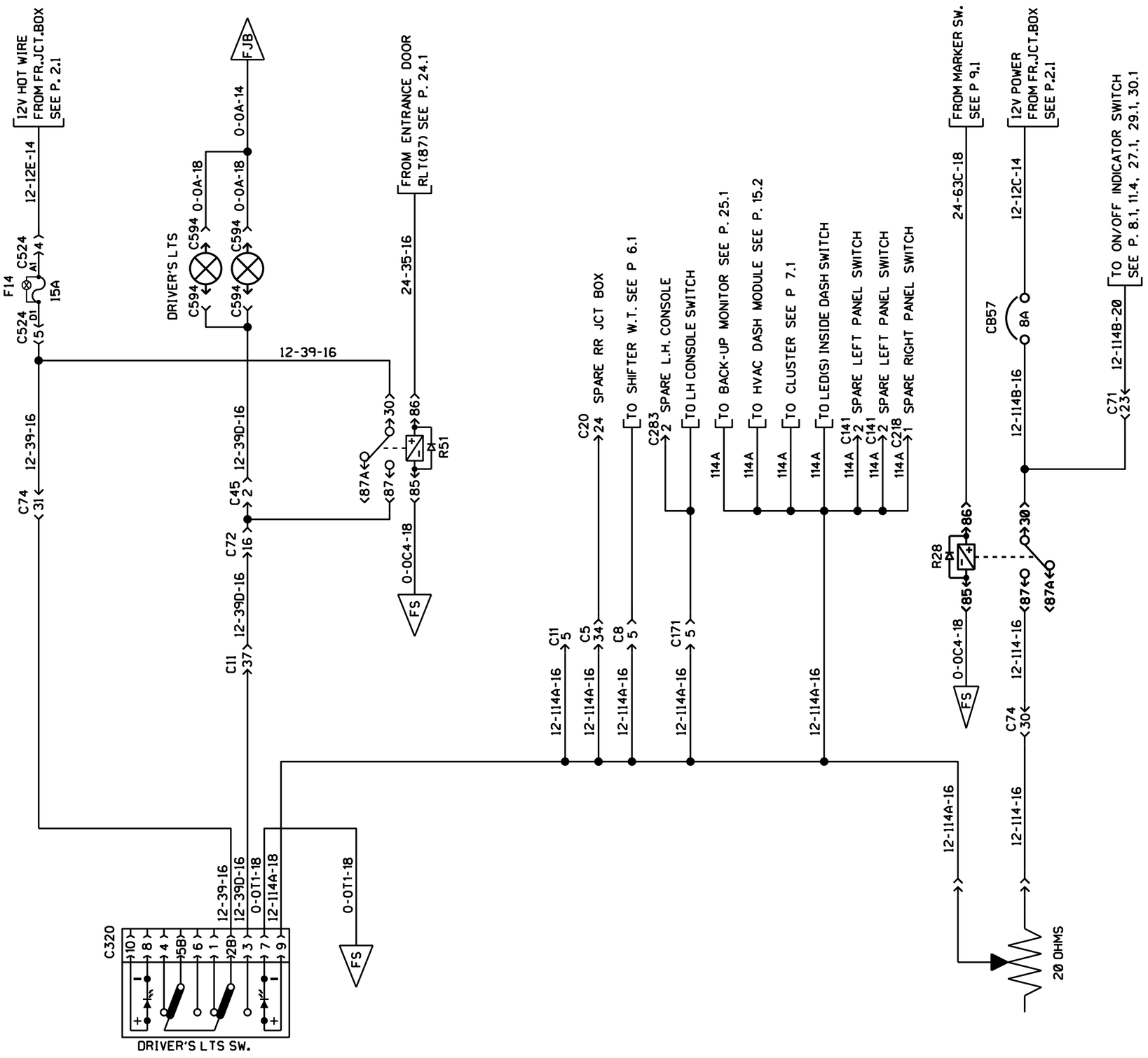

DRIVER'S LTS

DASH LTS. RHEOSTAT

INTERIOR LIGHTING

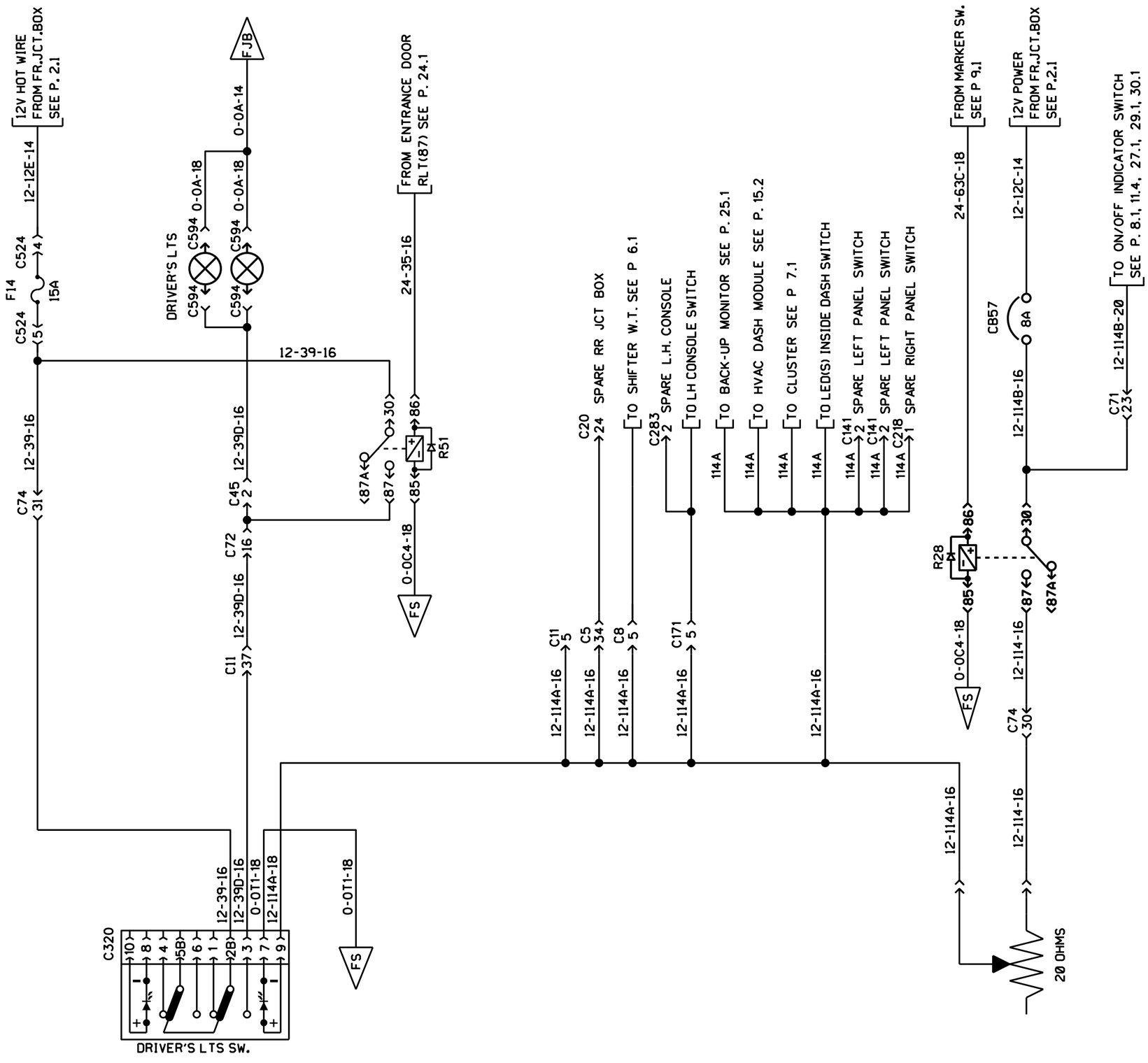

INTERIOR LIGHTING

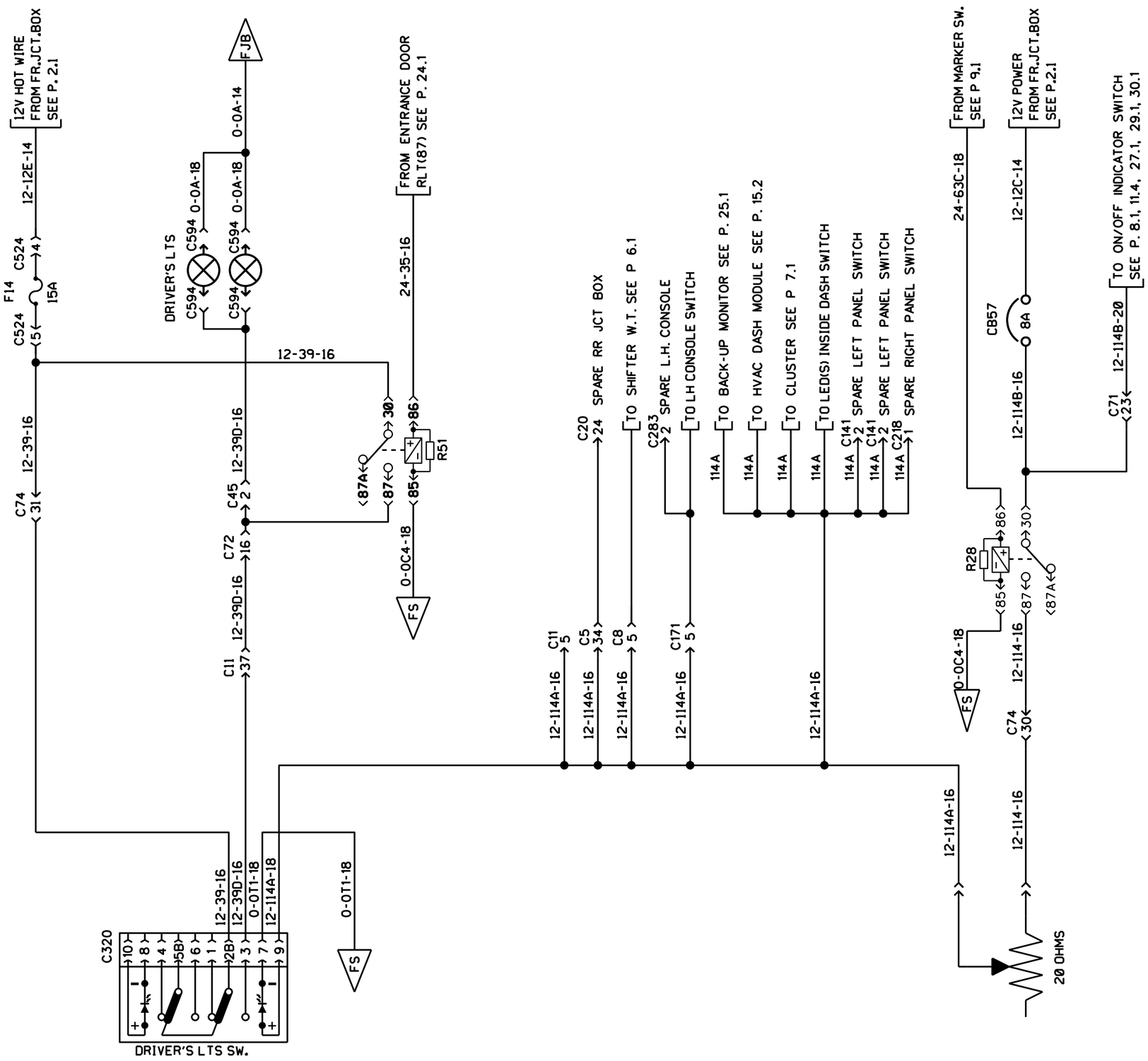

DRIVER'S LTS

DASH LTS. RHEOSTAT

INTERIOR LIGHTING

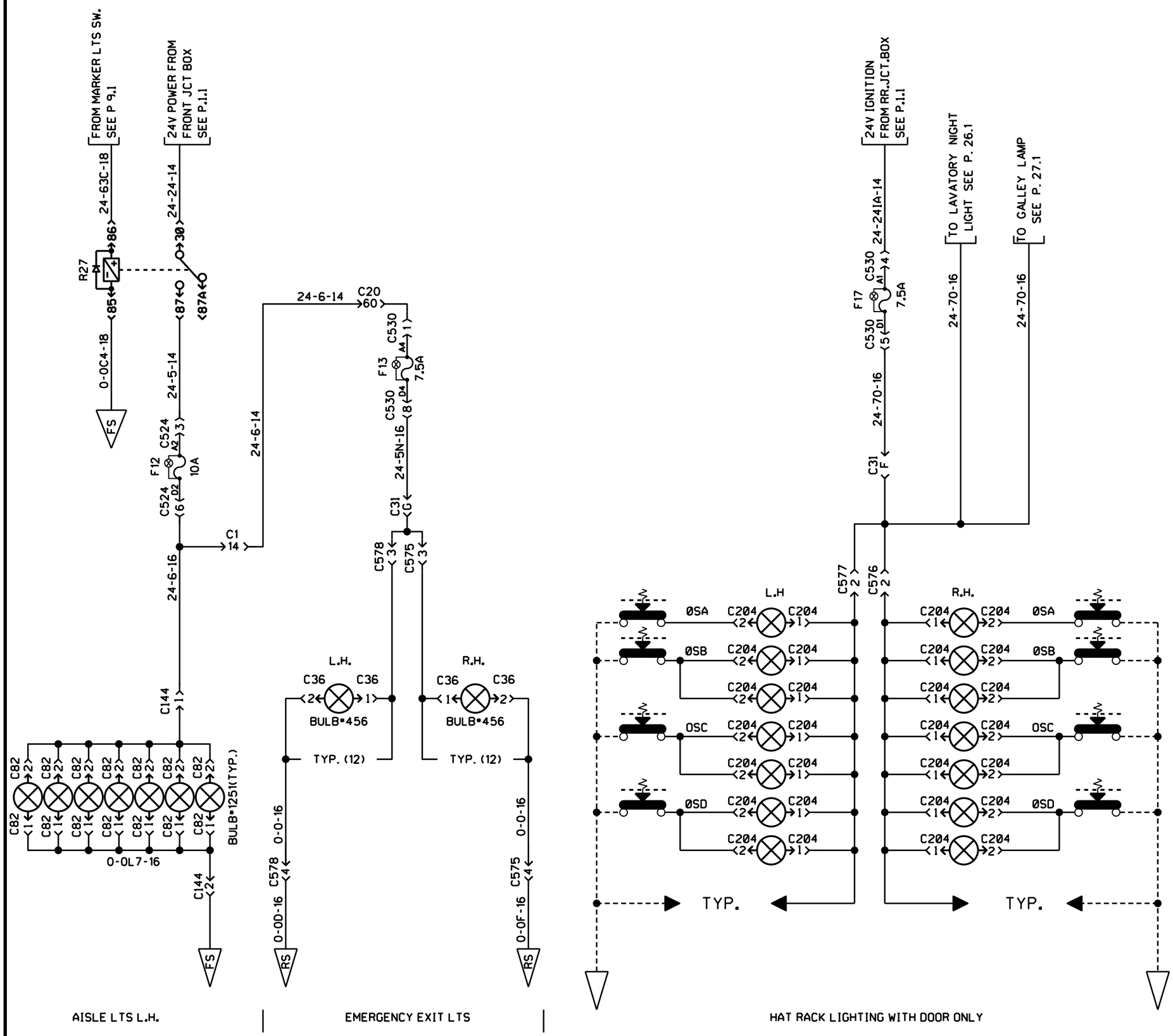

INTERIOR LIGHTING

PREVOST	WIRING DIAGRAM	NO: D060993	PAGE: 11.3	REVISION 00

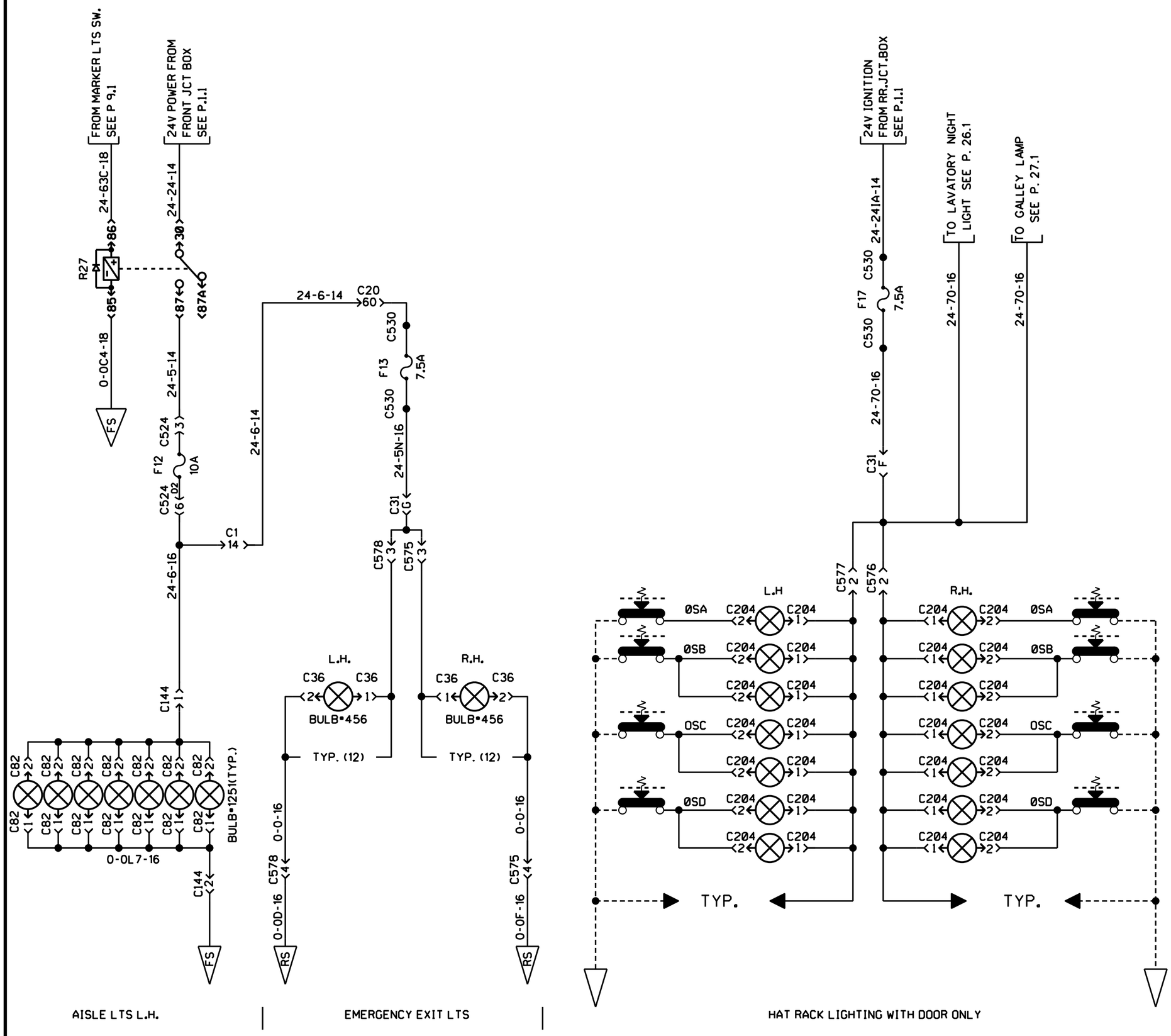

INTERIOR LIGHTING

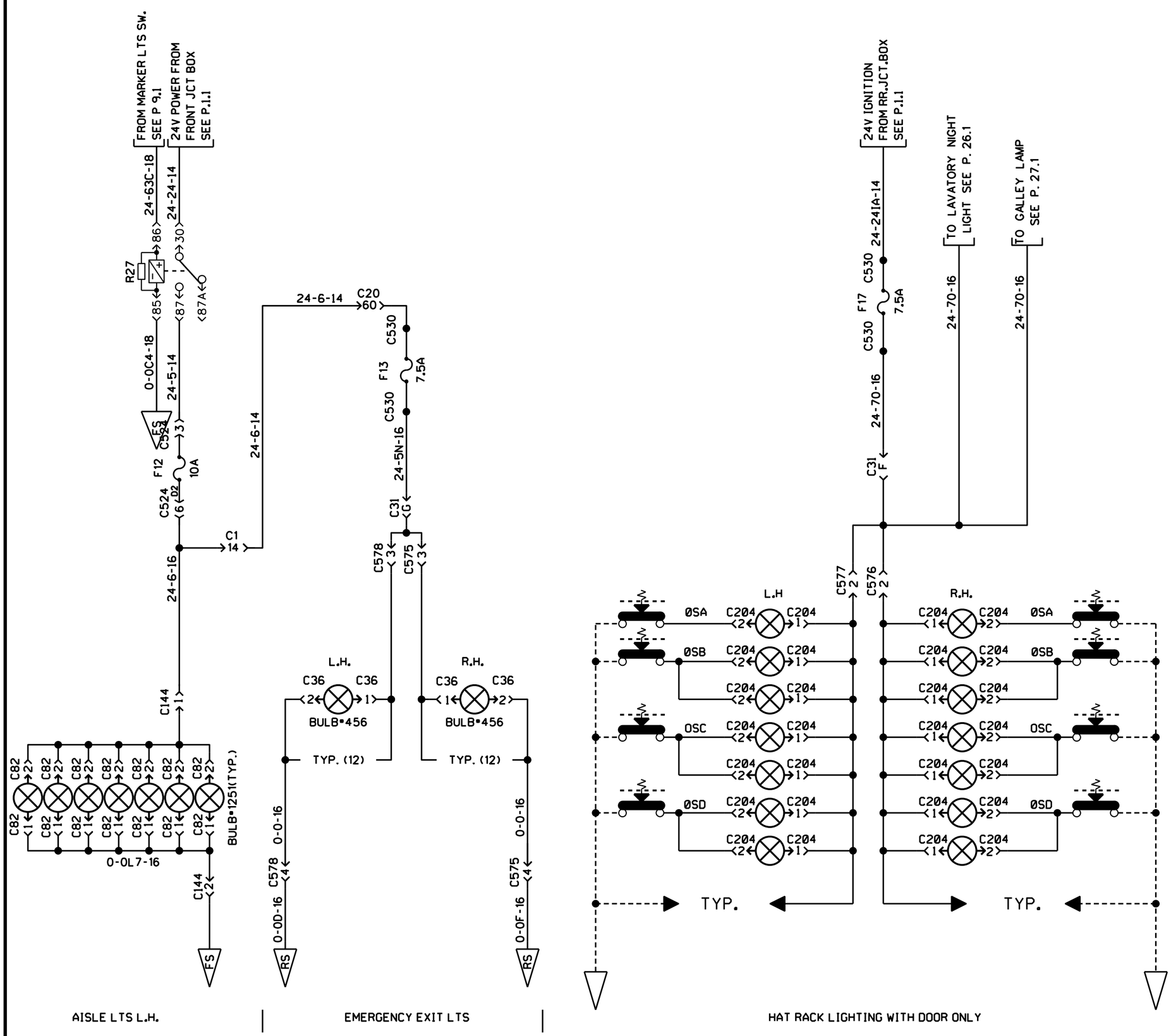

INTERIOR LIGHTING

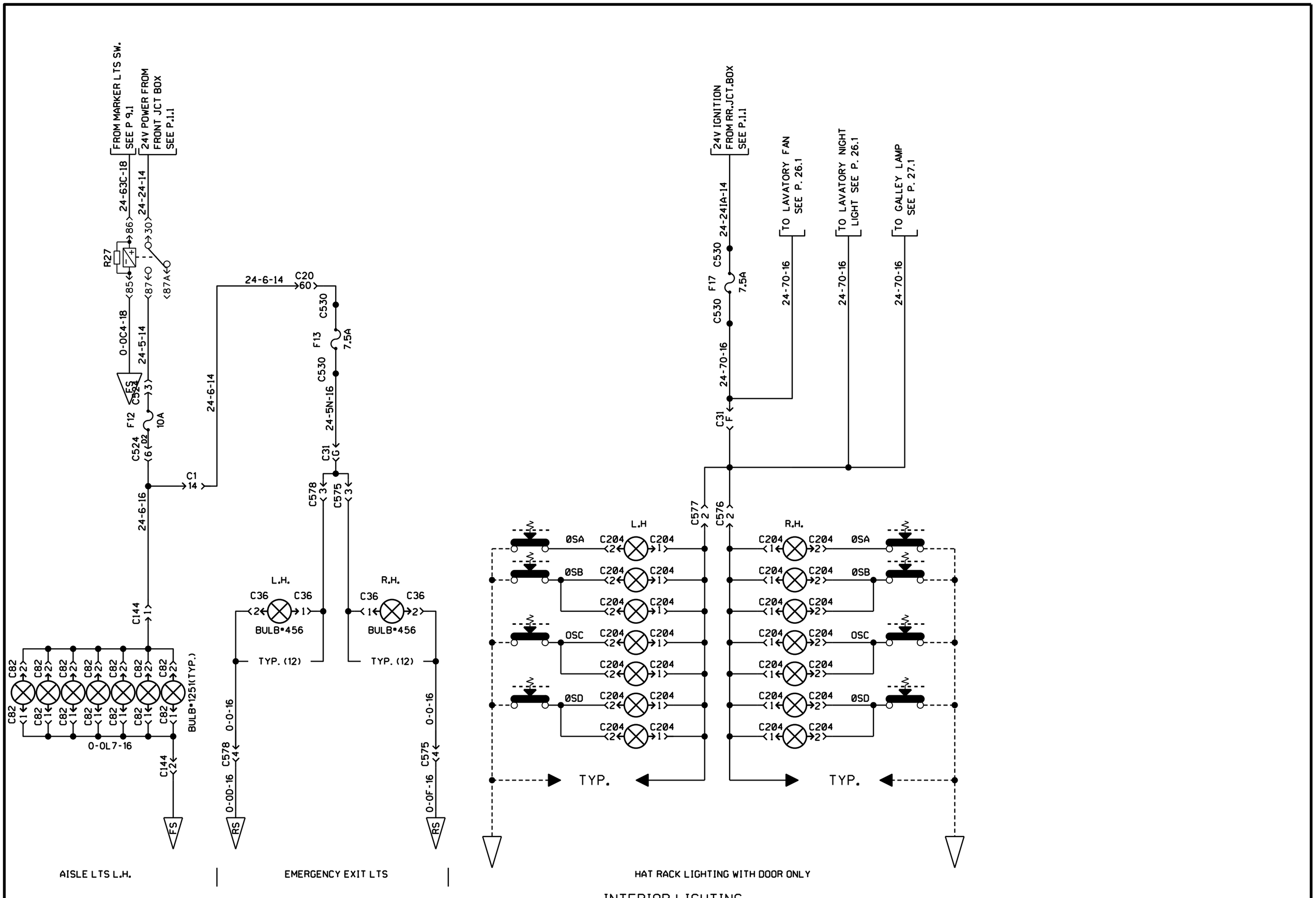

INTERIOR LIGHTING

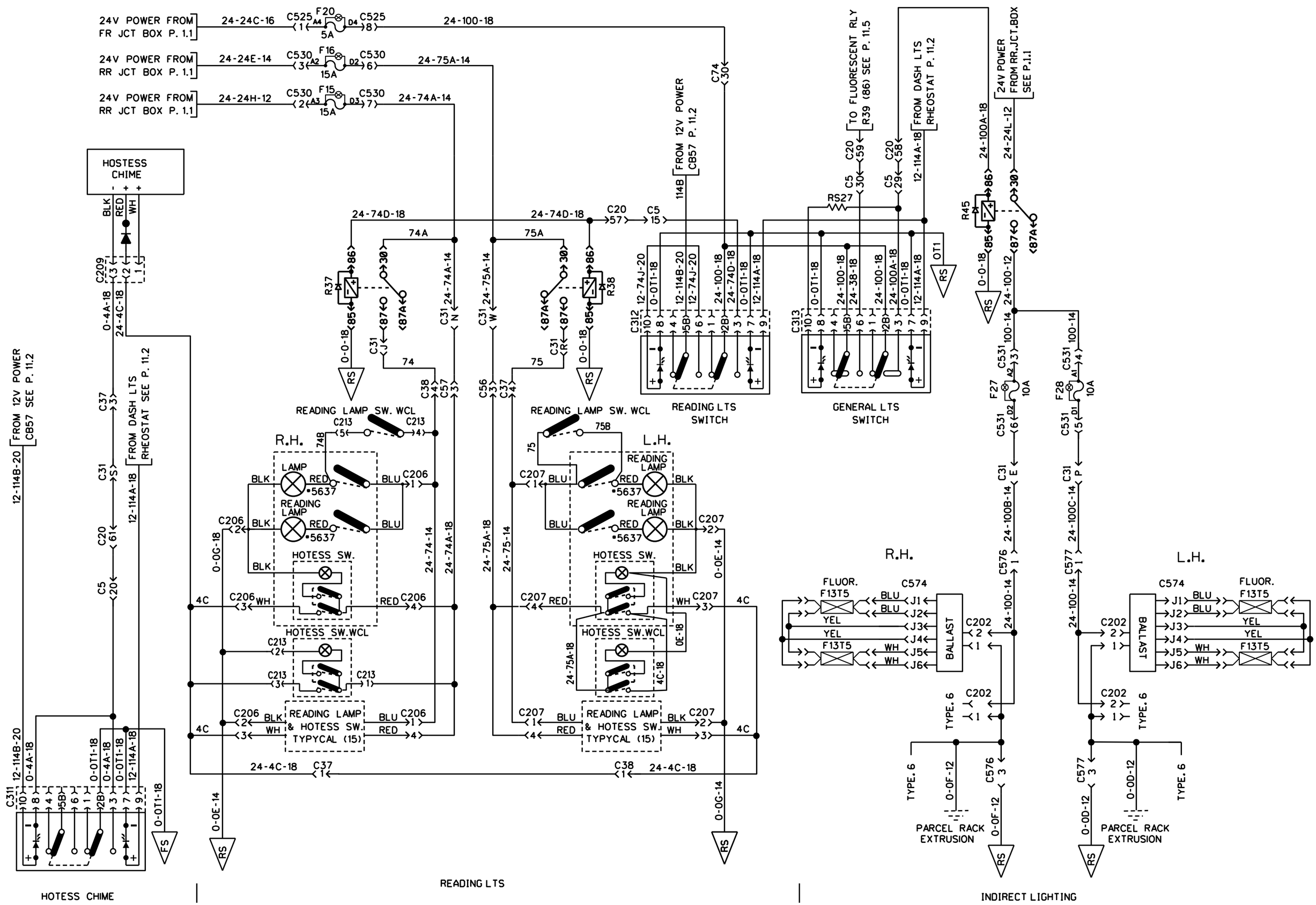

INTERIOR LIGHTING

PREVOST	WIRING DIAGRAM	NO: D060993	PAGE: 11.4	REVISION 00

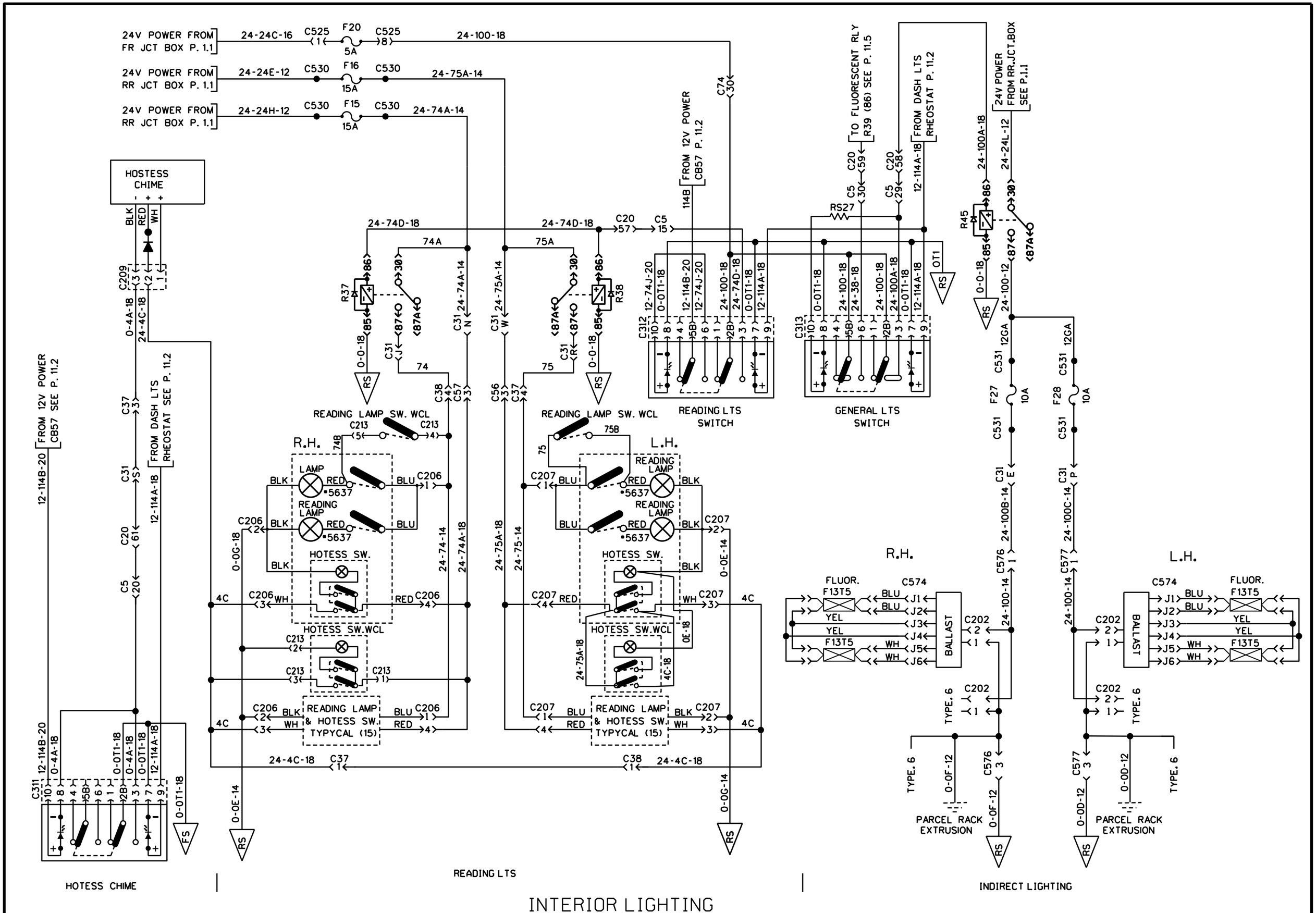

INTERIOR LIGHTING

PREVOST	WIRING DIAGRAM	NO: D060993	PAGE: 11.4	REVISION 05

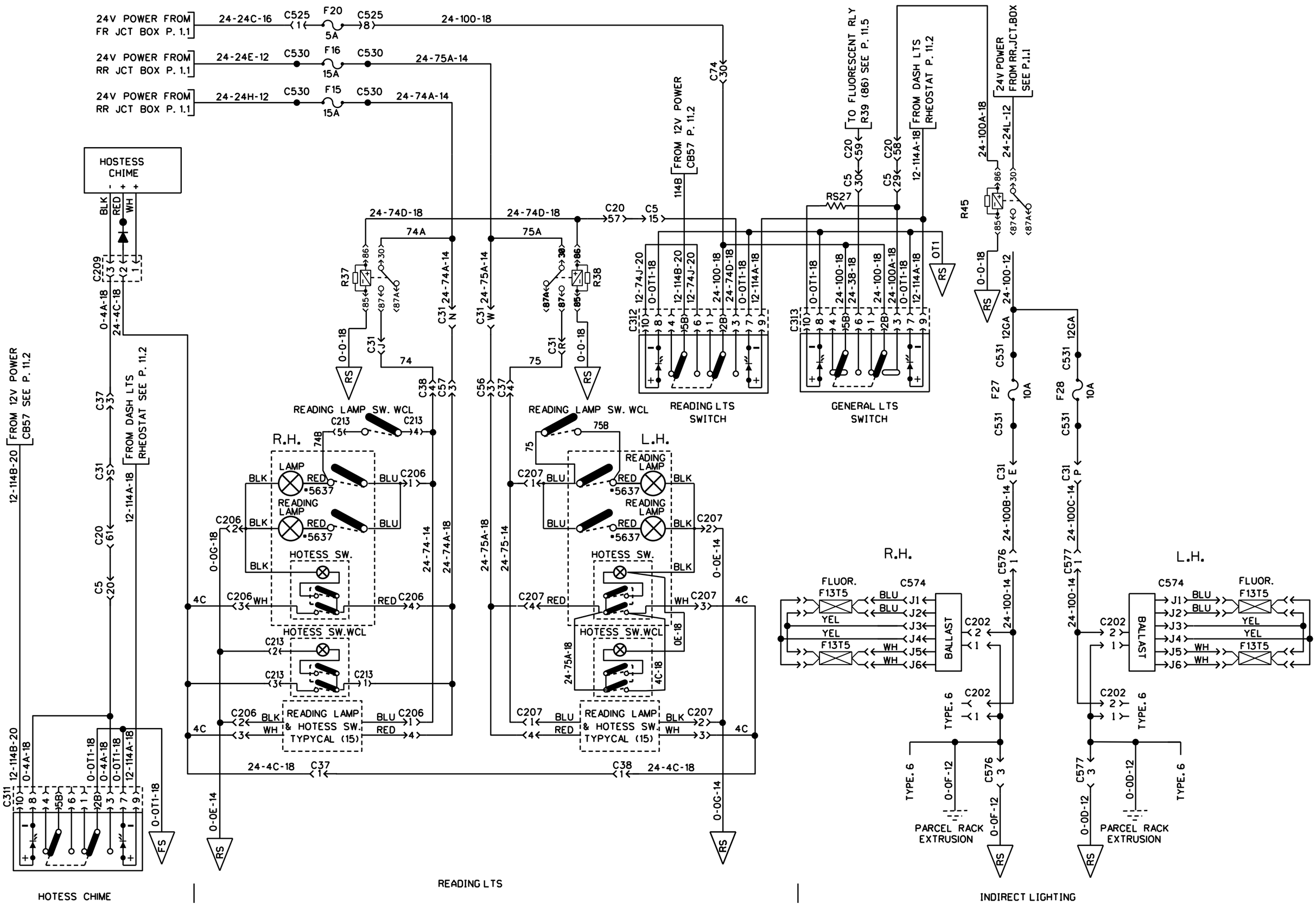

INTERIOR LIGHTING

PREVOST	WIRING DIAGRAM	NO: D060993	PAGE: 11.4	REVISION 15

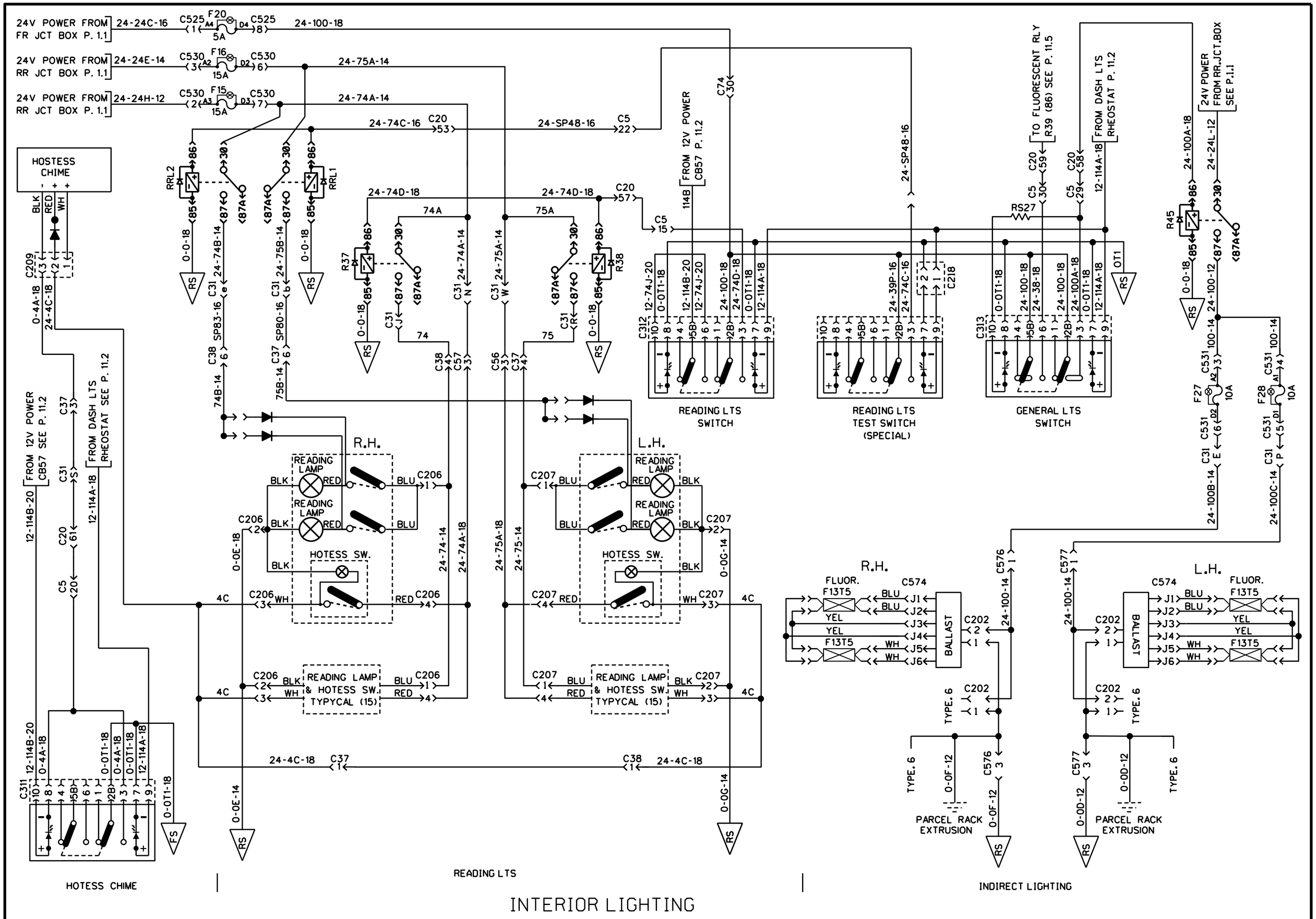

INTERIOR LIGHTING

PREVOST	WIRING DIAGRAM	NO: D060993	PAGE: 11.4 sp1	REVISION 00

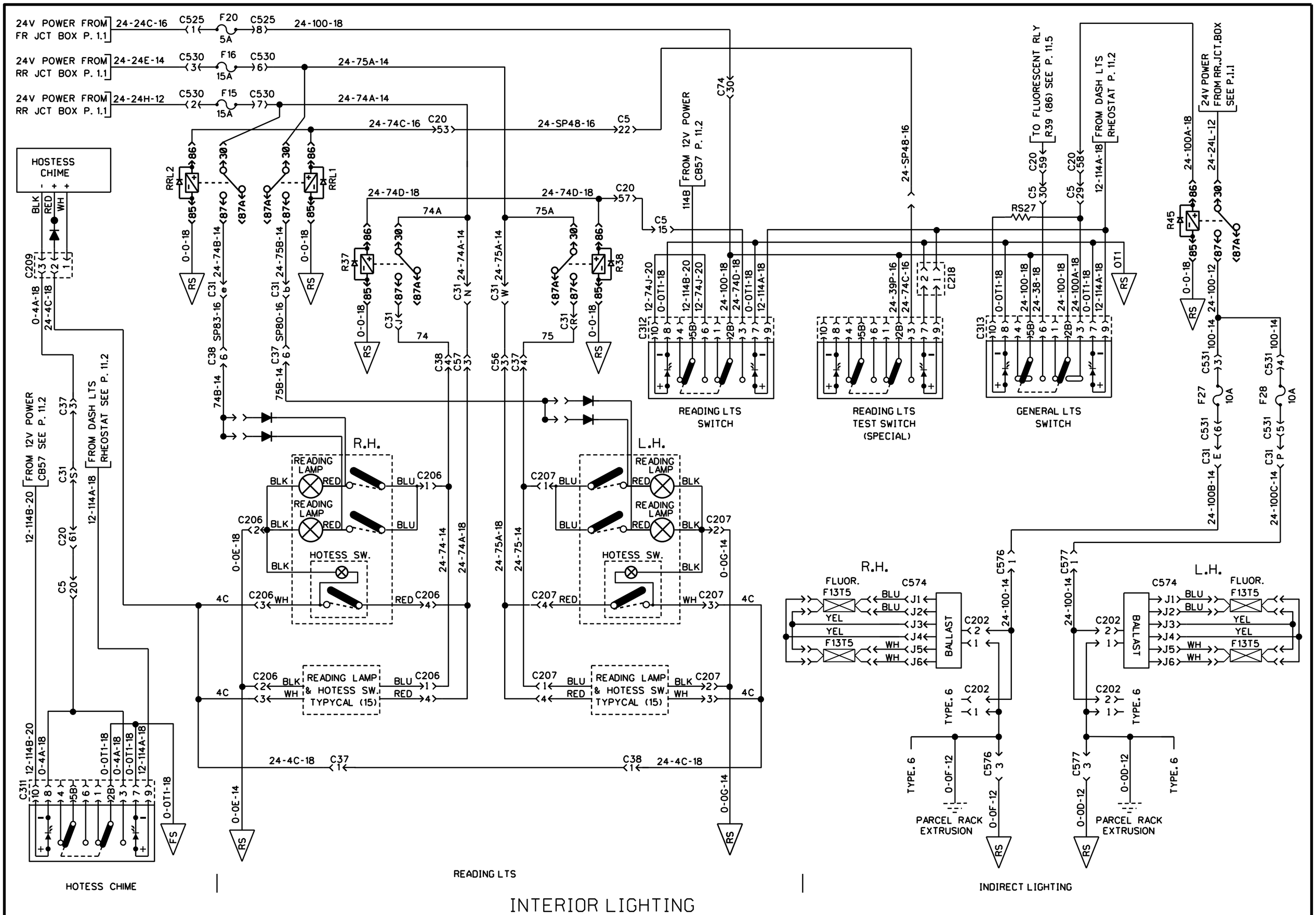

INTERIOR LIGHTING

PREVOST	WIRING DIAGRAM	NO: D060993	PAGE: 11.4 sp1	REVISION 05

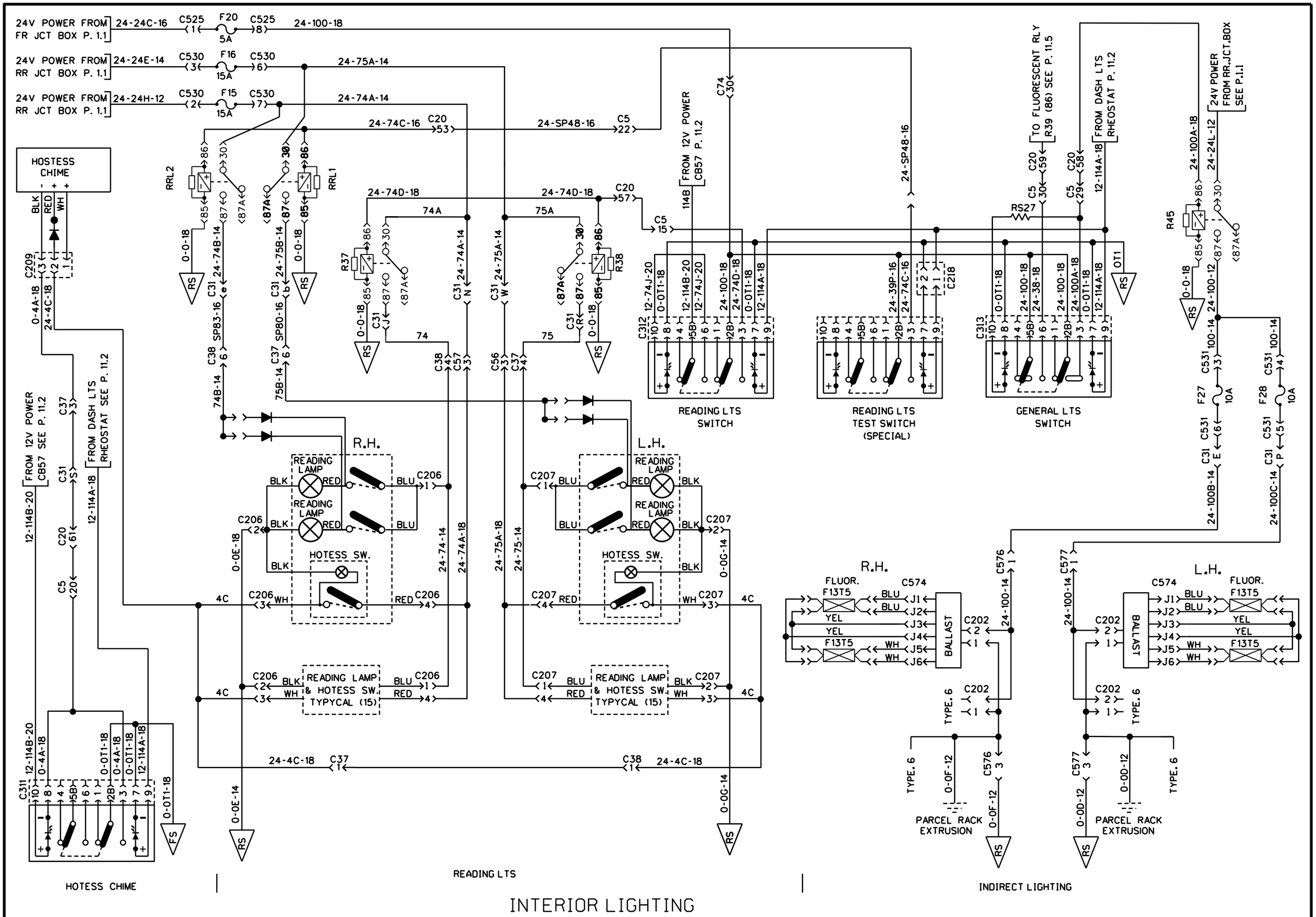

INTERIOR LIGHTING

PREVOST	WIRING DIAGRAM	NO: D060993	PAGE: 11.4 sp1	REVISION 15

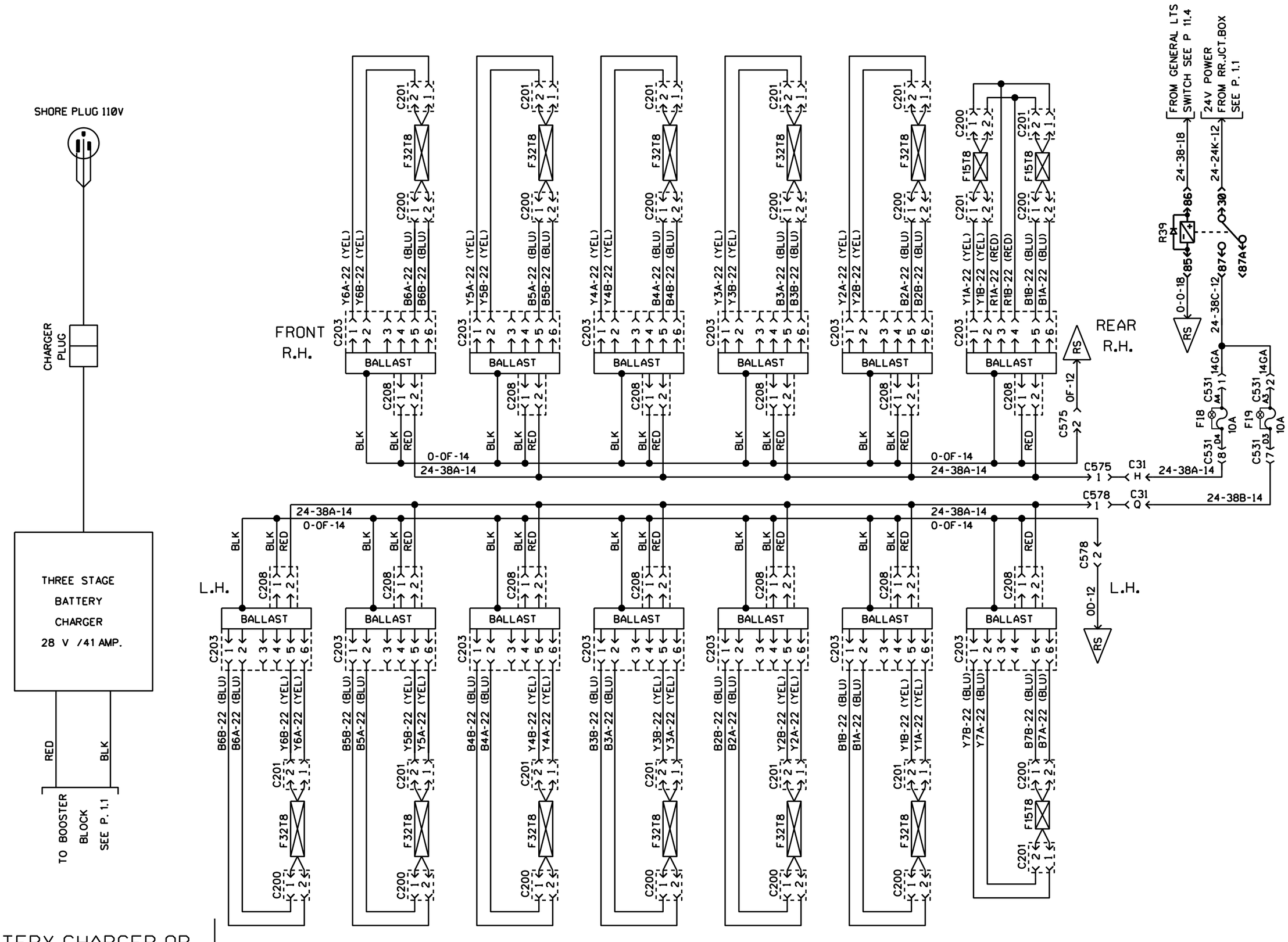

BATTERY CHARGER OR IN-STATION LIGHTING

24V FLUORESCENT INTERIOR LIGHTING

PREVOST	WIRING DIAGRAM	NO: D060993	PAGE: 11.5	REVISION 00

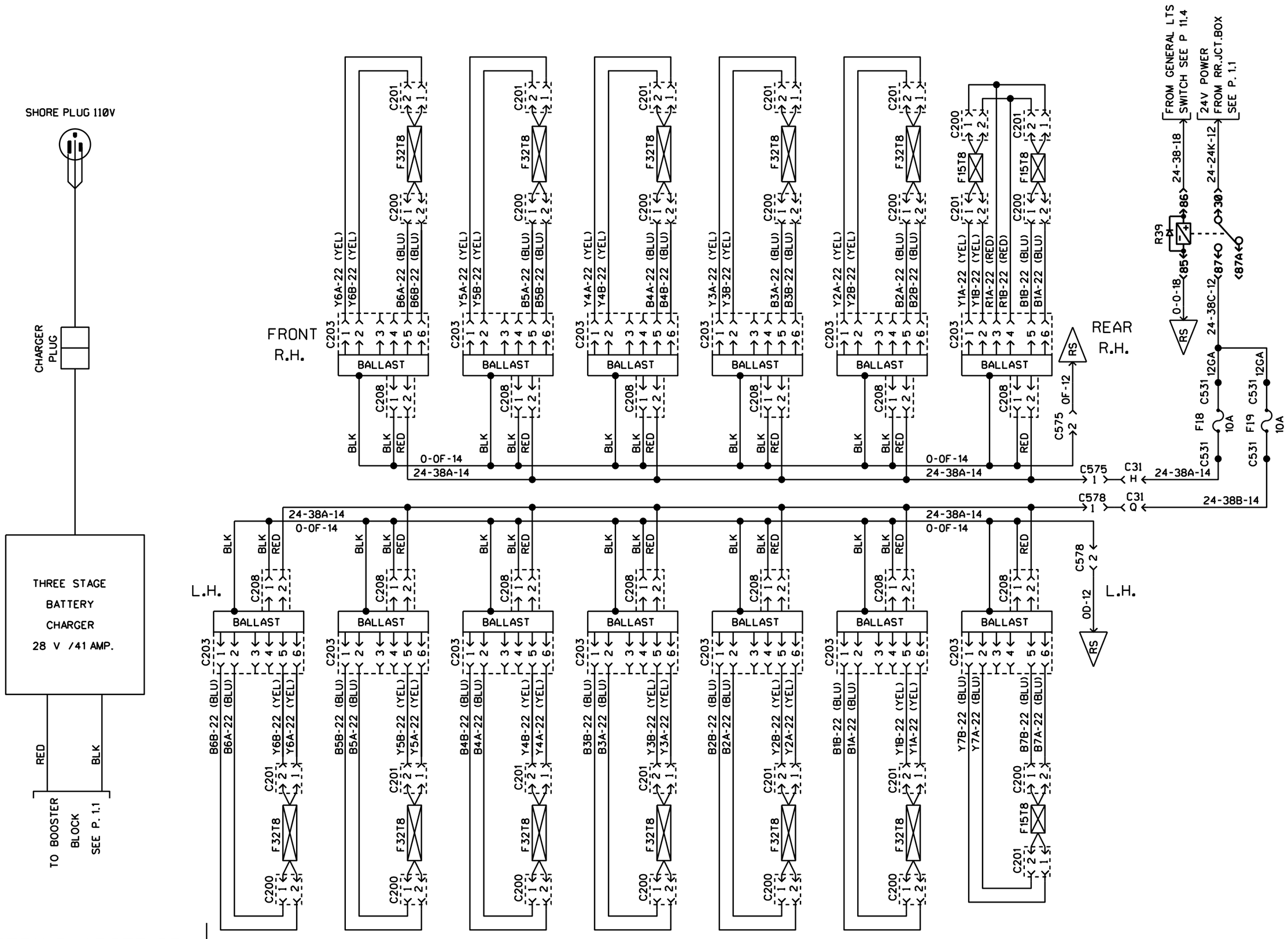

BATTERY CHARGER OR IN-STATION LIGHTING

24V FLUORESCENT INTERIOR LIGHTING

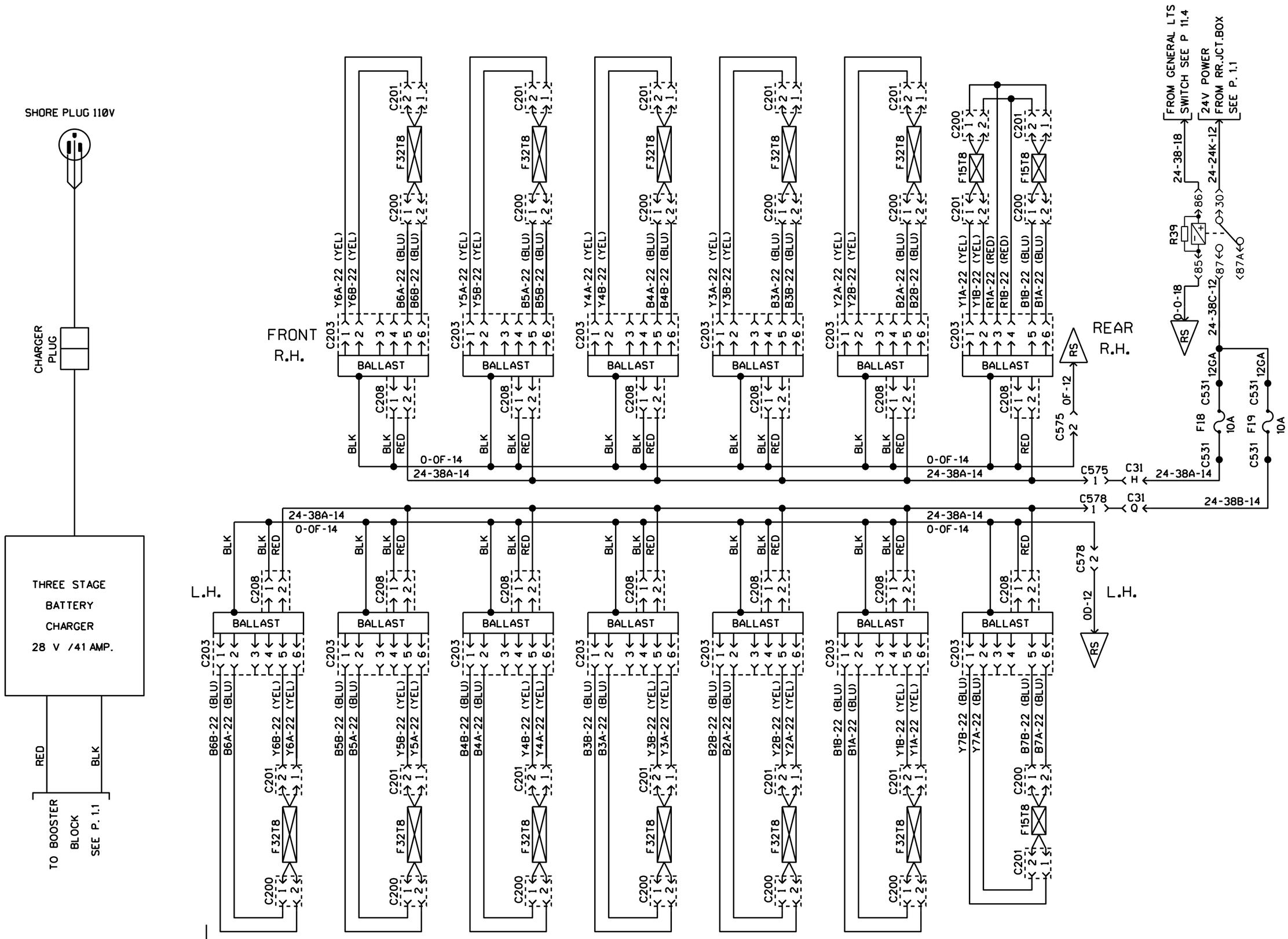

BATTERY CHARGER OR IN-STATION LIGHTING

24V FLUORESCENT INTERIOR LIGHTING

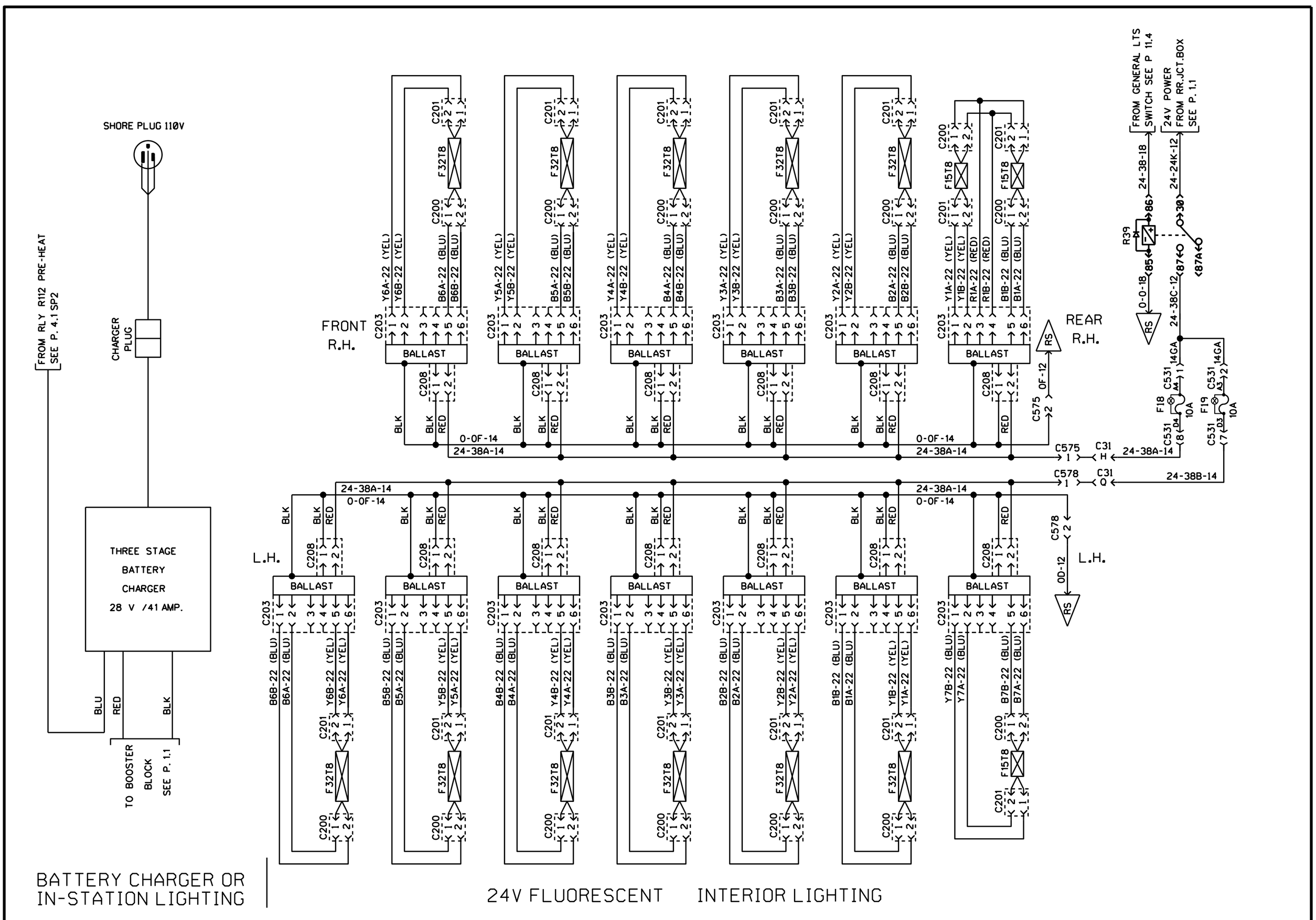

PREVOST	WIRING DIAGRAM	NO: D060993	PAGE: 11.5sp1	REVISION 00

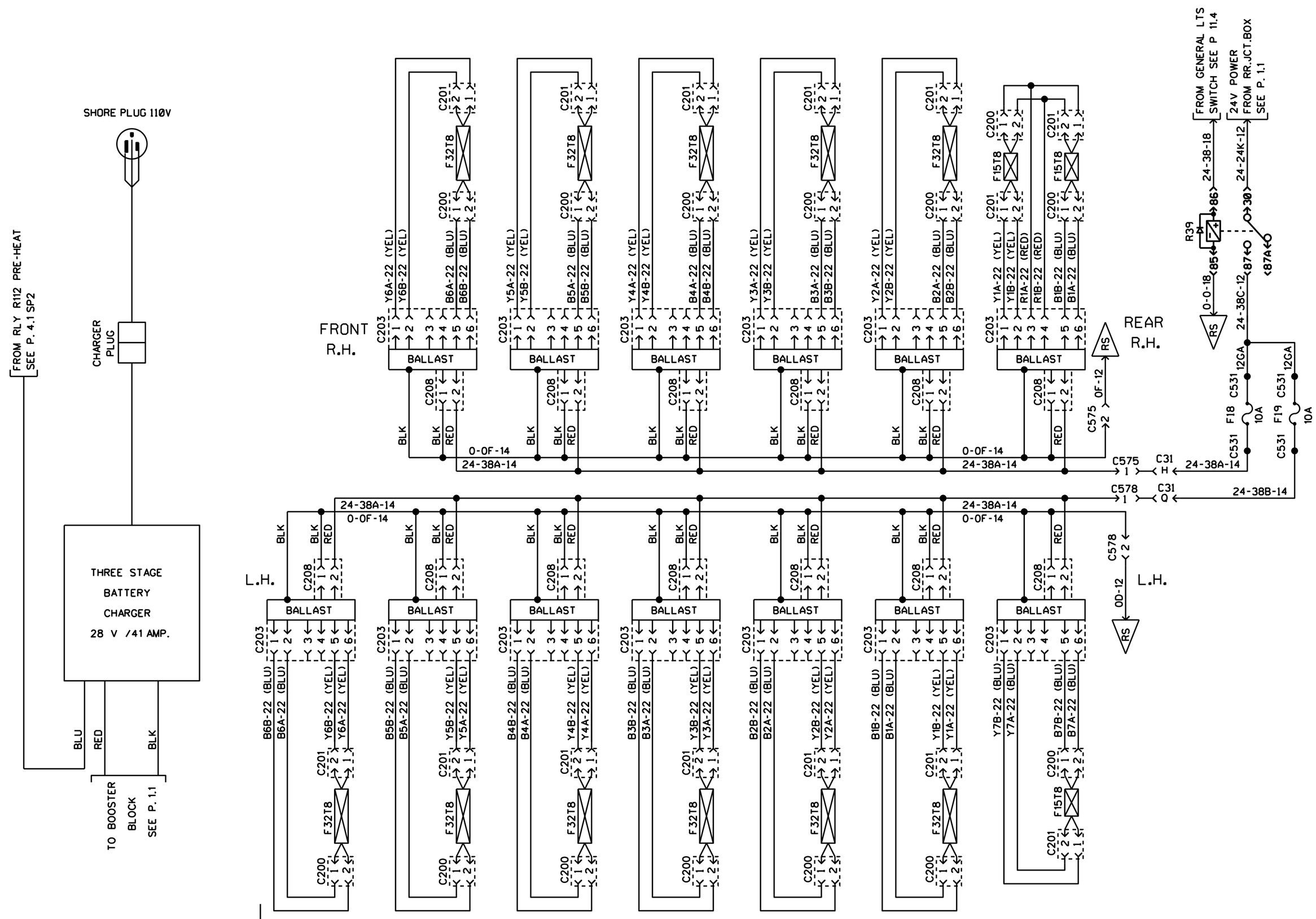

BATTERY CHARGER OR IN-STATION LIGHTING

24V FLUORESCENT INTERIOR LIGHTING

PREVOST	WIRING DIAGRAM	NO: D060993	PAGE: 11.5sp1	REVISION 05

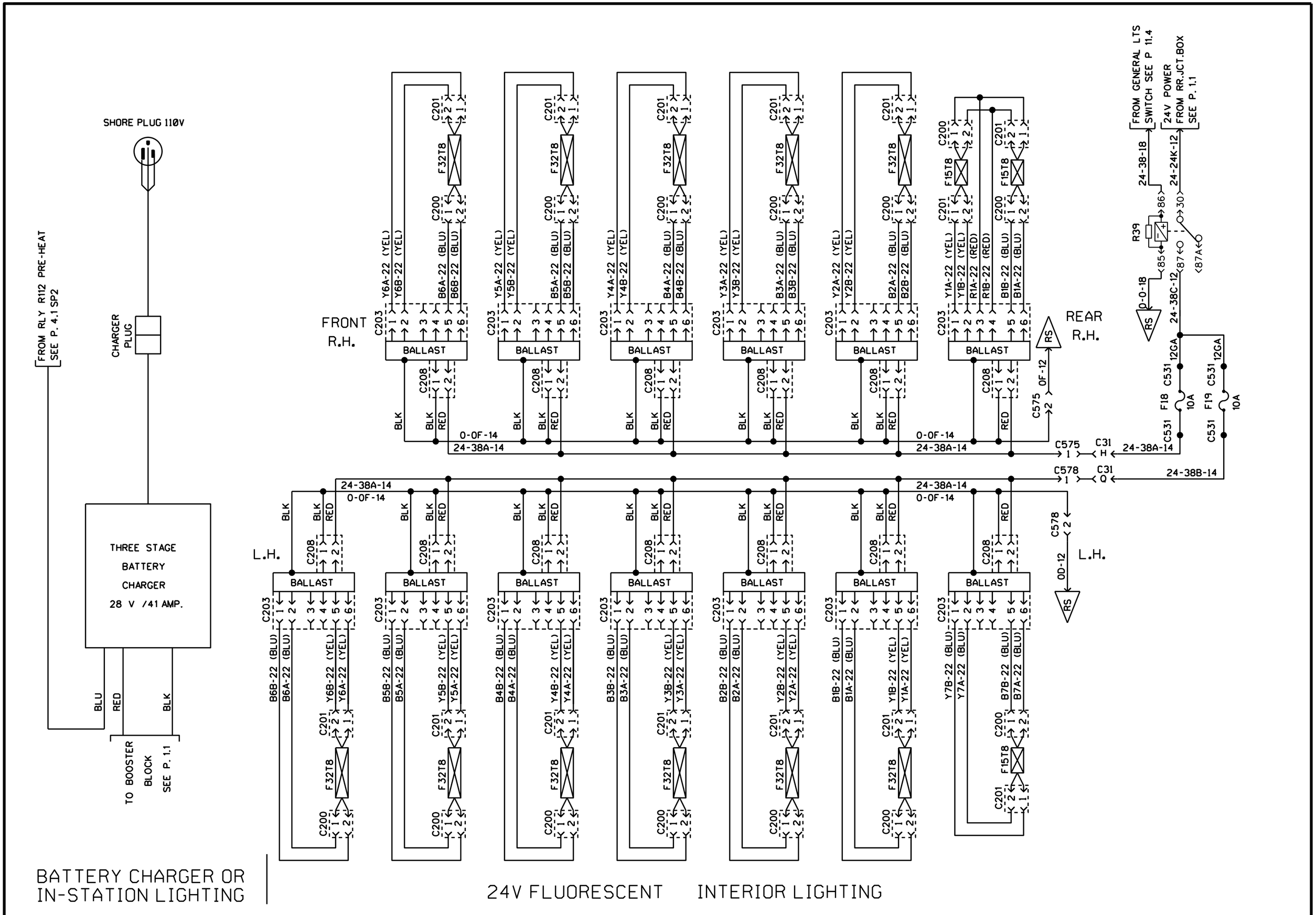
SHORE PLUG 110V
CHARGER PLUG
FROM RLY R112 PRE-HEAT SEE P. 4.1 SP2
THREE STAGE BATTERY CHARGER 28 V /41 AMP.
BLU
RED
BLK
TO BOOSTER BLOCK SEE P. 1.1
FROM GENERAL LTS SWITCH SEE P 11.4
24V POWER FROM RR.JCT.BOX SEE P. 1.1
24-38-18
24-24K-12
R39
0-0-18
24-38C-12
F18 C531 10A
F19 C531 10A
12GA
FRONT R.H.
REAR R.H.
L.H.
L.H.
BALLAST
C203
C208
C200
C201
F32T8
F15T8
Y6A-22 (YEL)
Y6B-22 (YEL)
B6A-22 (BLU)
B6B-22 (BLU)
Y5A-22 (YEL)
Y5B-22 (YEL)
B5A-22 (BLU)
B5B-22 (BLU)
Y4A-22 (YEL)
Y4B-22 (YEL)
B4A-22 (BLU)
B4B-22 (BLU)
Y3A-22 (YEL)
Y3B-22 (YEL)
B3A-22 (BLU)
B3B-22 (BLU)
Y2A-22 (YEL)
Y2B-22 (YEL)
B2A-22 (BLU)
B2B-22 (BLU)
Y1A-22 (YEL)
Y1B-22 (YEL)
R1A-22 (RED)
R1B-22 (RED)
B1B-22 (BLU)
B1A-22 (BLU)
Y7B-22 (BLU)
Y7A-22 (BLU)
B7B-22 (BLU)
B7A-22 (BLU)
0-0F-14
24-38A-14
24-38B-14
0F-12
0D-12
C575
C578
C31
RS
BATTERY CHARGER OR IN-STATION LIGHTING
24V FLUORESCENT INTERIOR LIGHTING

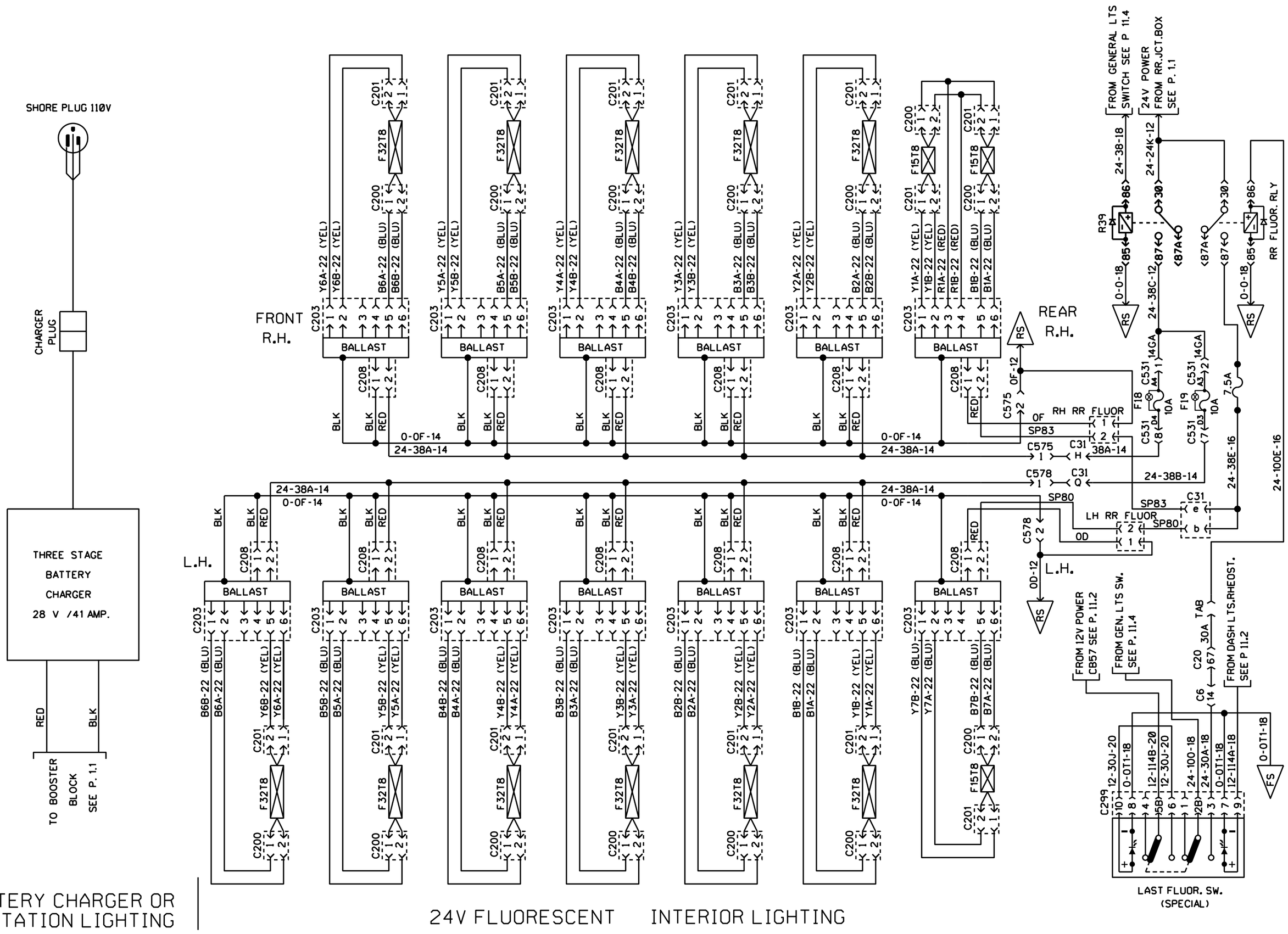

BATTERY CHARGER OR IN-STATION LIGHTING

24V FLUORESCENT INTERIOR LIGHTING

PREVOST	WIRING DIAGRAM	NO: D060993	PAGE: 11.5 sp2	REVISION 00

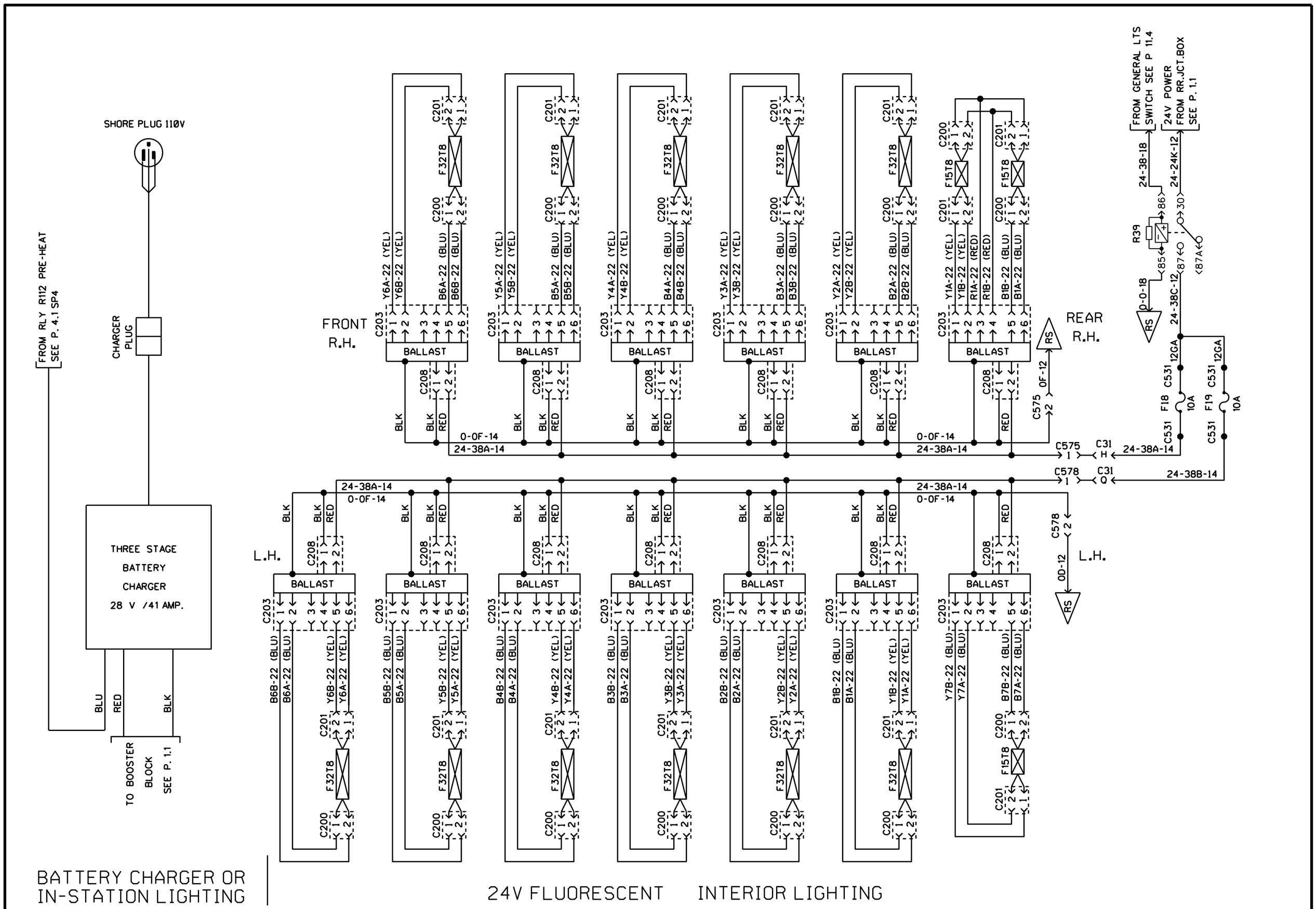

BATTERY CHARGER OR IN-STATION LIGHTING

24V FLUORESCENT INTERIOR LIGHTING

PREVOST	WIRING DIAGRAM	NO: D060993	PAGE: 11.5sp3	REVISION 00

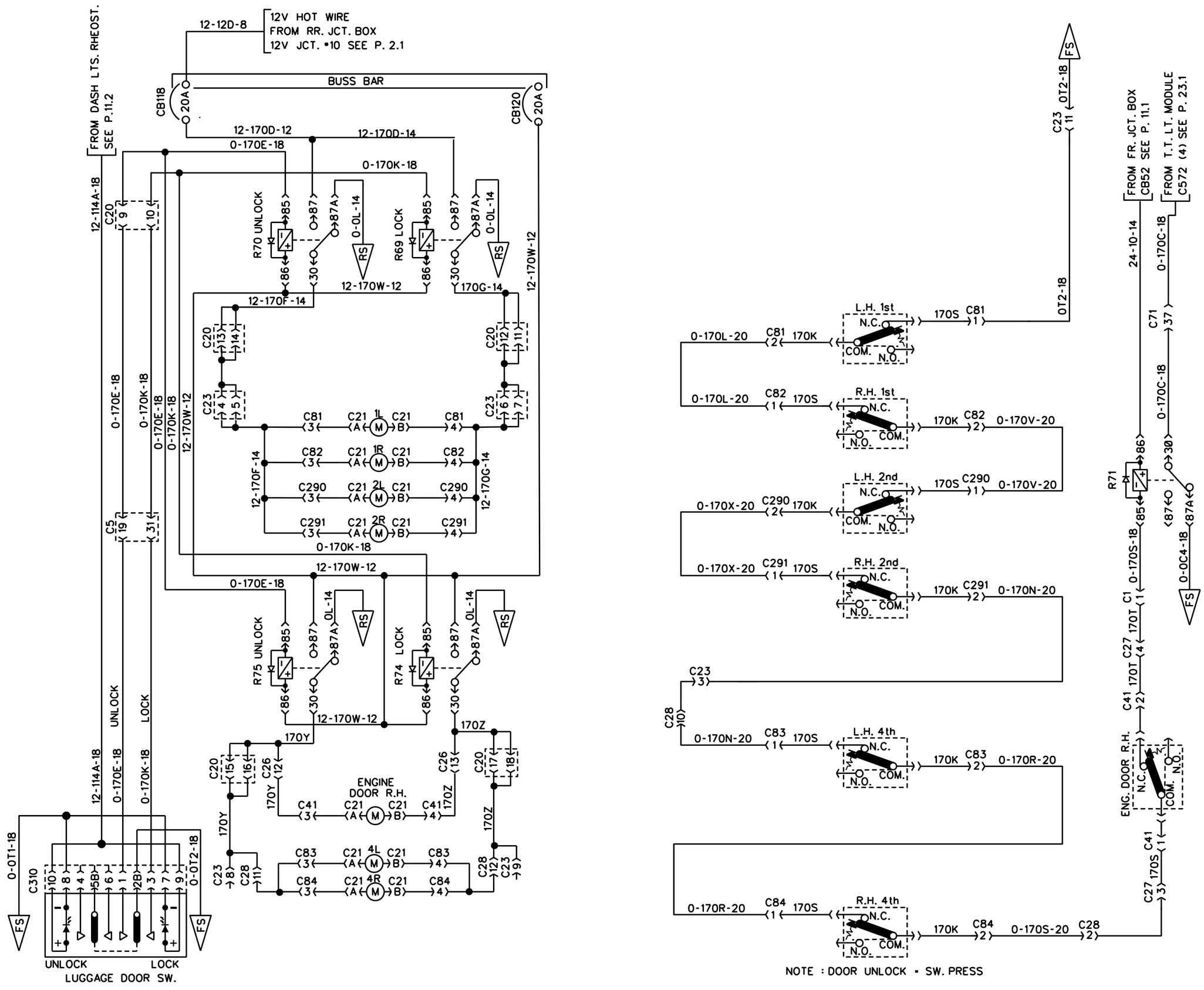

LUGGAGE DOOR LOCK

PREVOST	WIRING DIAGRAM	NO: D060993	PAGE: 12.1	REVISION 00

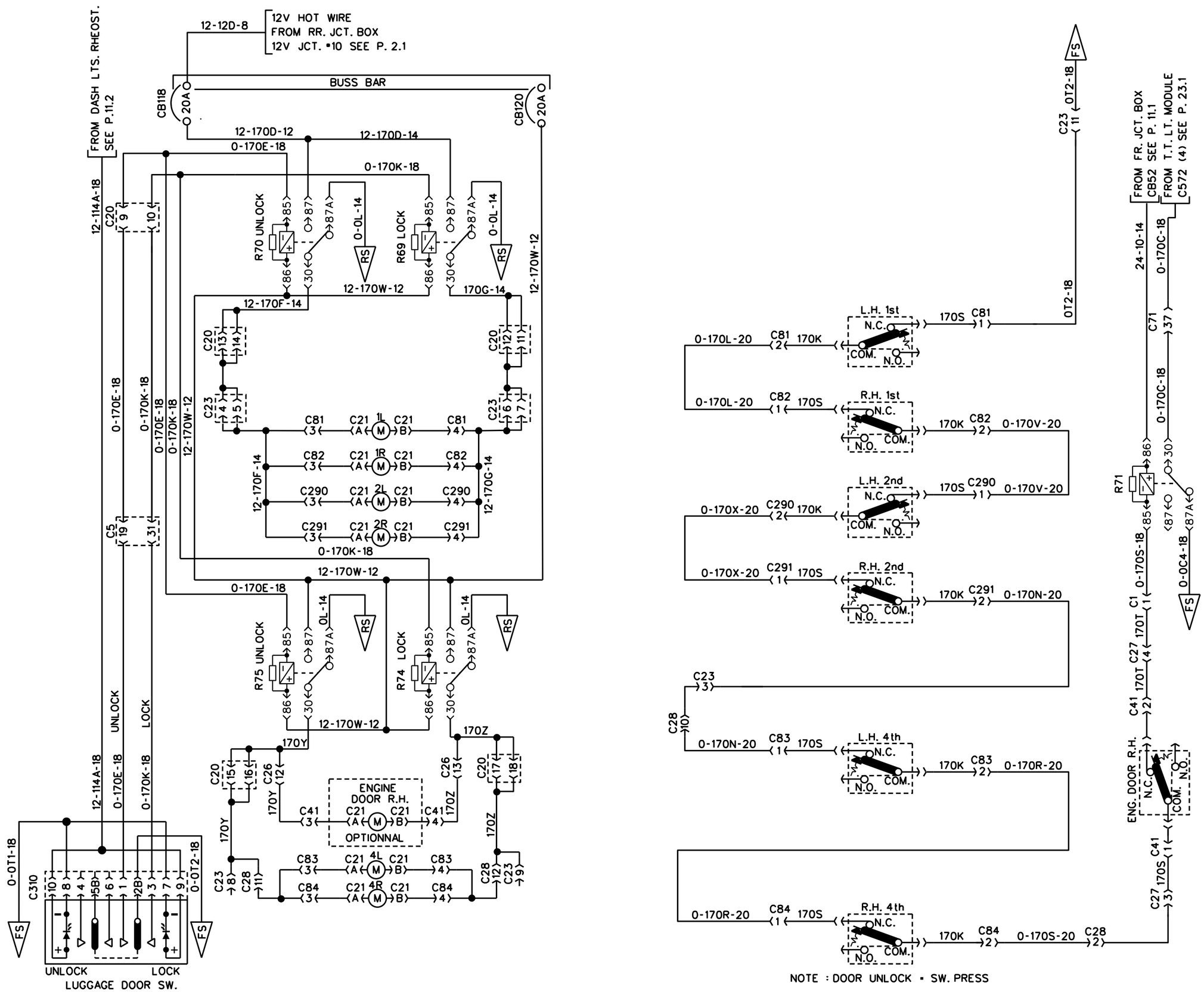

LUGGAGE DOOR LOCK

PREVOST	WIRING DIAGRAM	NO: D060993	PAGE: 12.1	REVISION 15

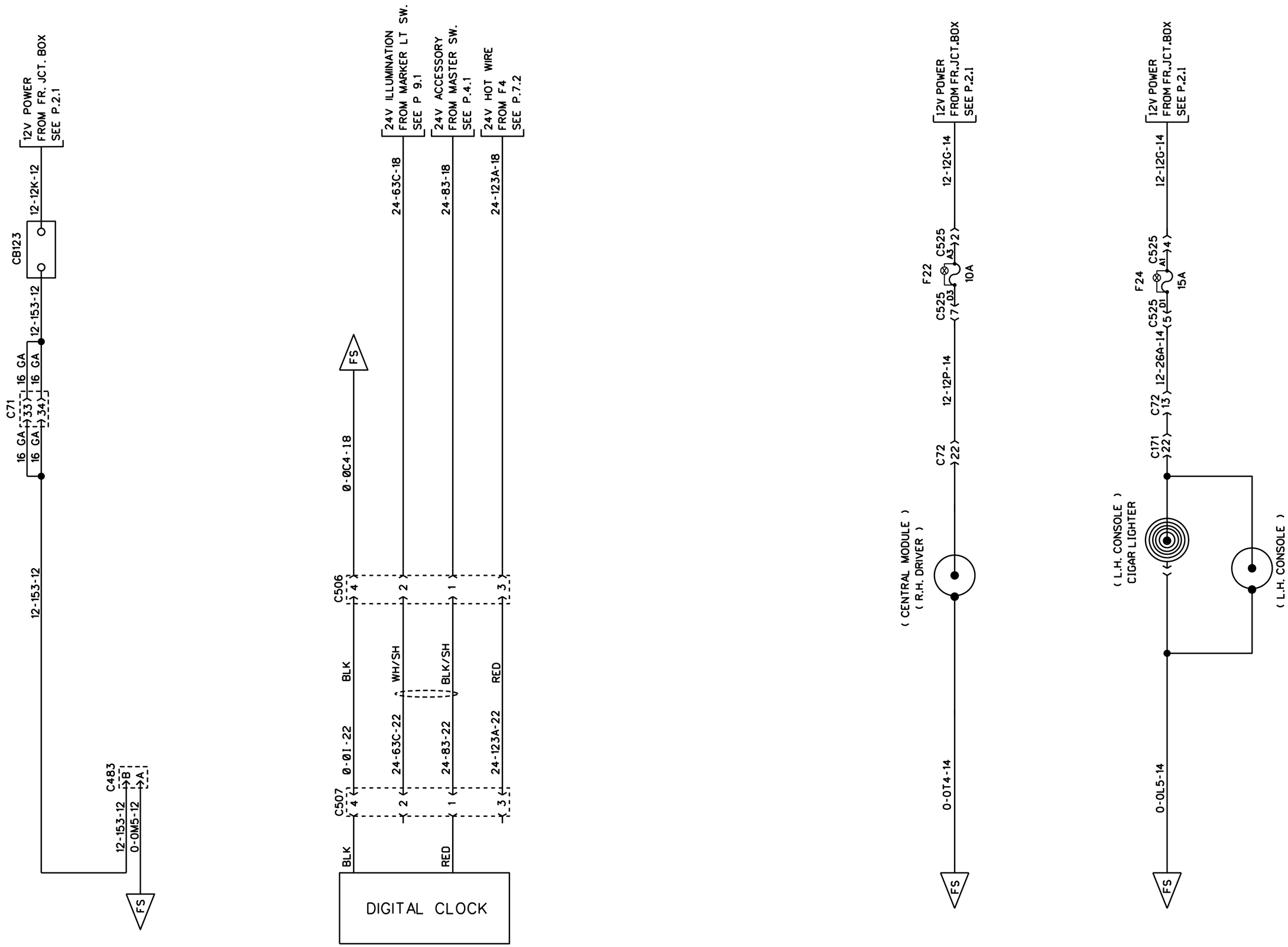

WIRING FOR DRIVER'S SEAT ELECT. ADJ. | DIGITAL CLOCK | POWER 12 VOLT OUTLET

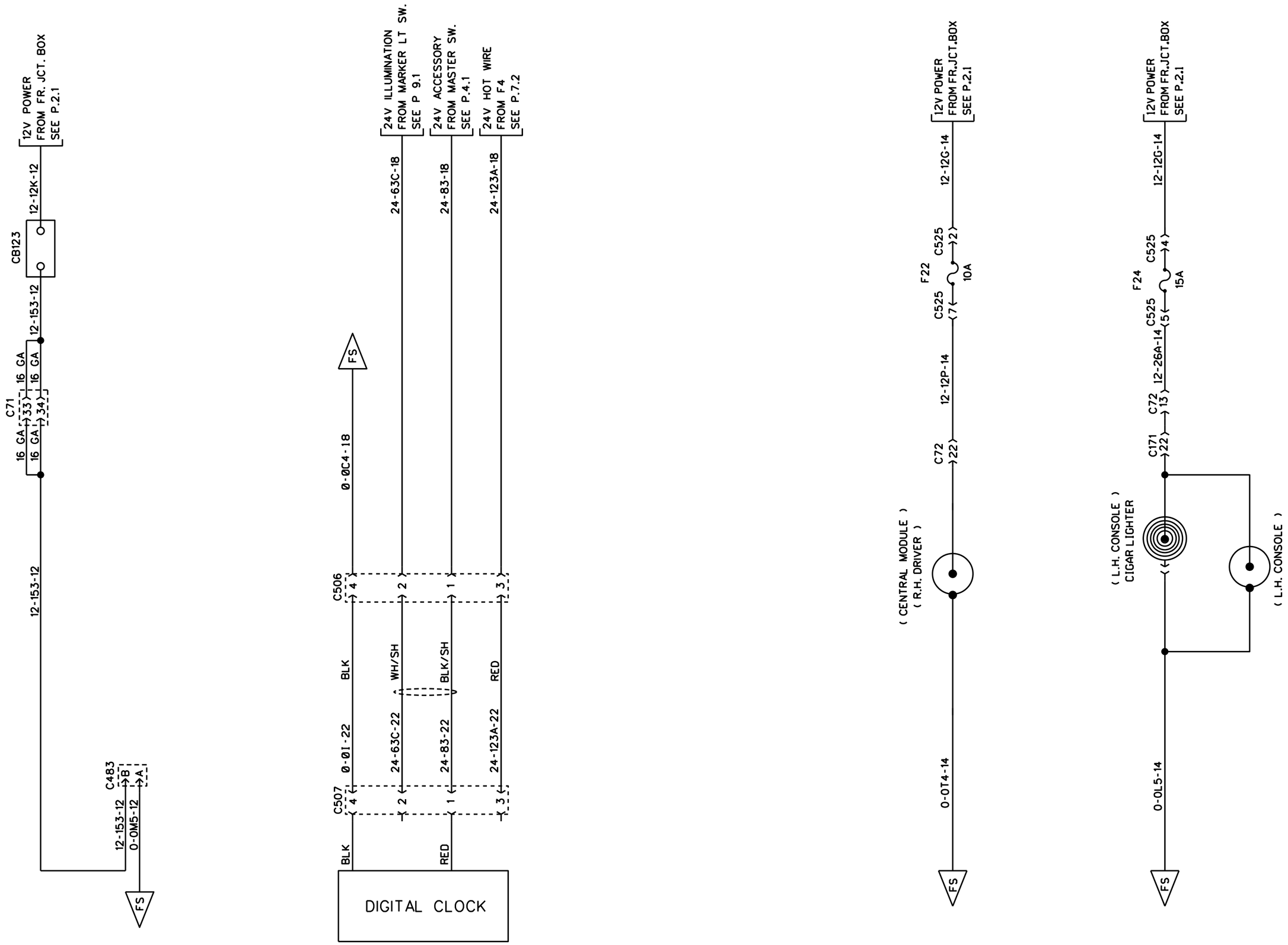

WIRING FOR
DRIVER'S SEAT ELECT. ADJ.

DIGITAL CLOCK

POWER 12 VOLT OUTLET

PREVOST	WIRING DIAGRAM	NO: D060993	PAGE: 13.1	REVISION 05

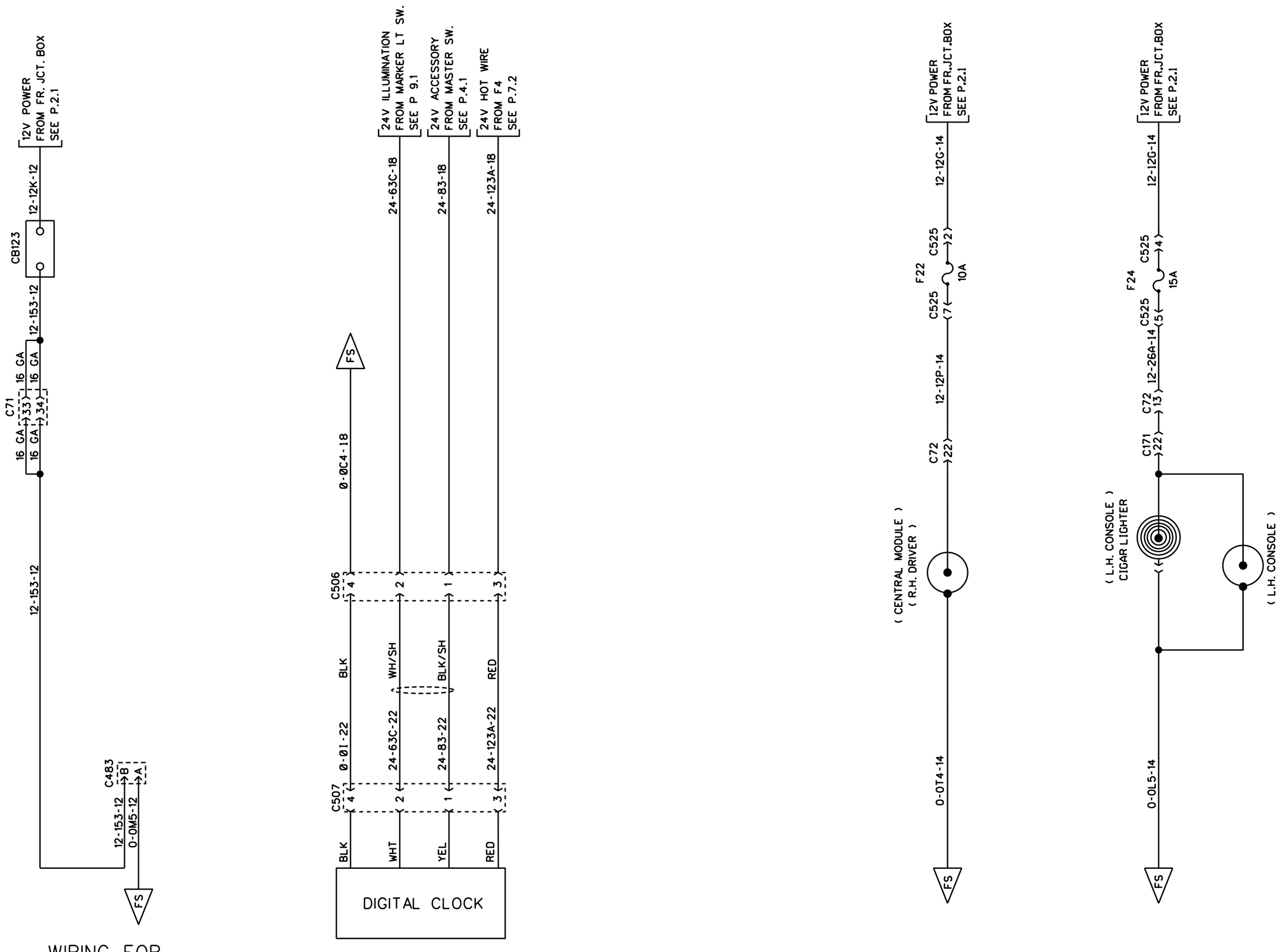

WIRING FOR
DRIVER'S SEAT ELECT. ADJ.

DIGITAL CLOCK

POWER 12 VOLT OUTLET

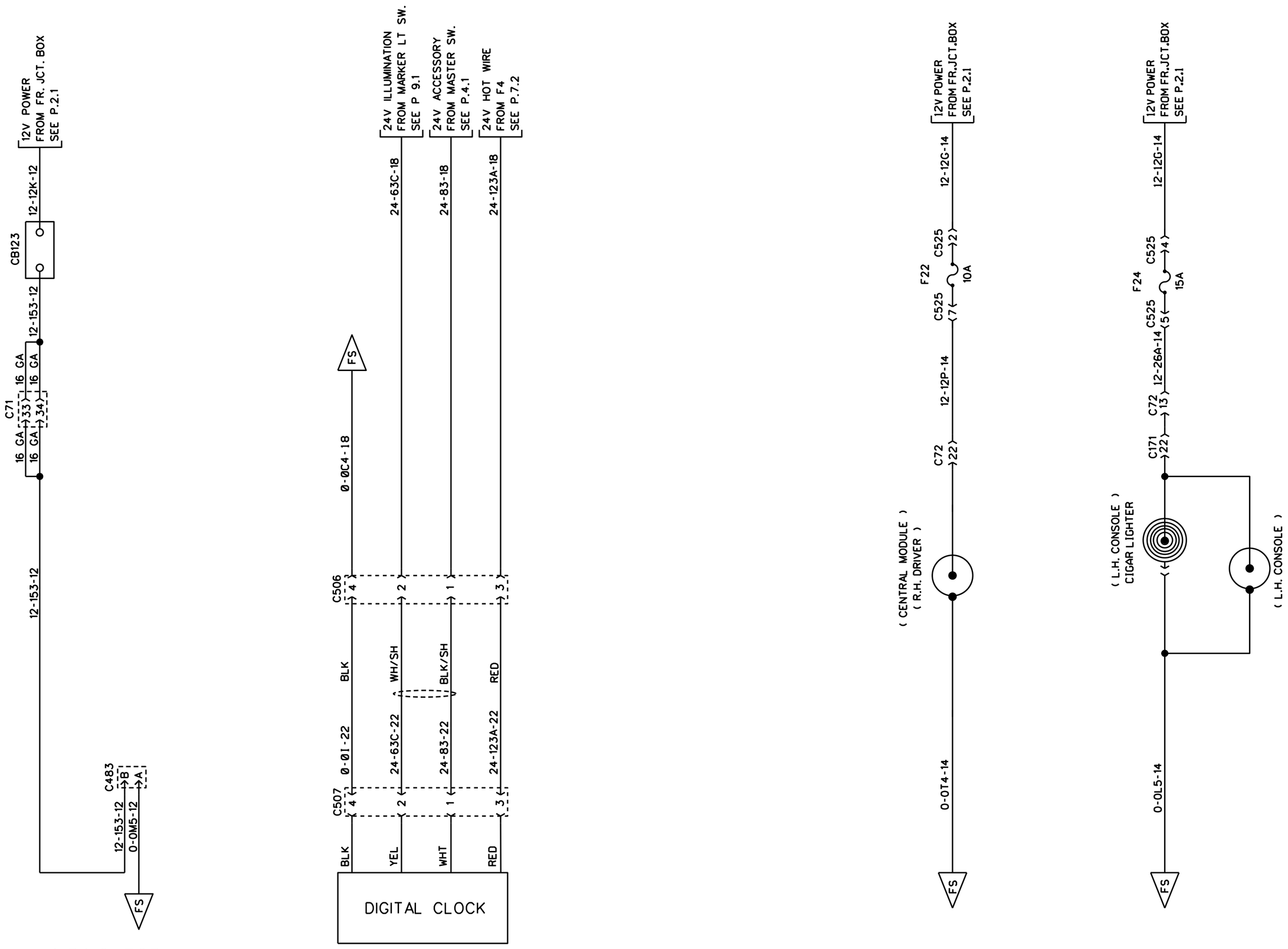

PREVOST	WIRING DIAGRAM	NO: D060993	PAGE: 13.1	REVISION 13

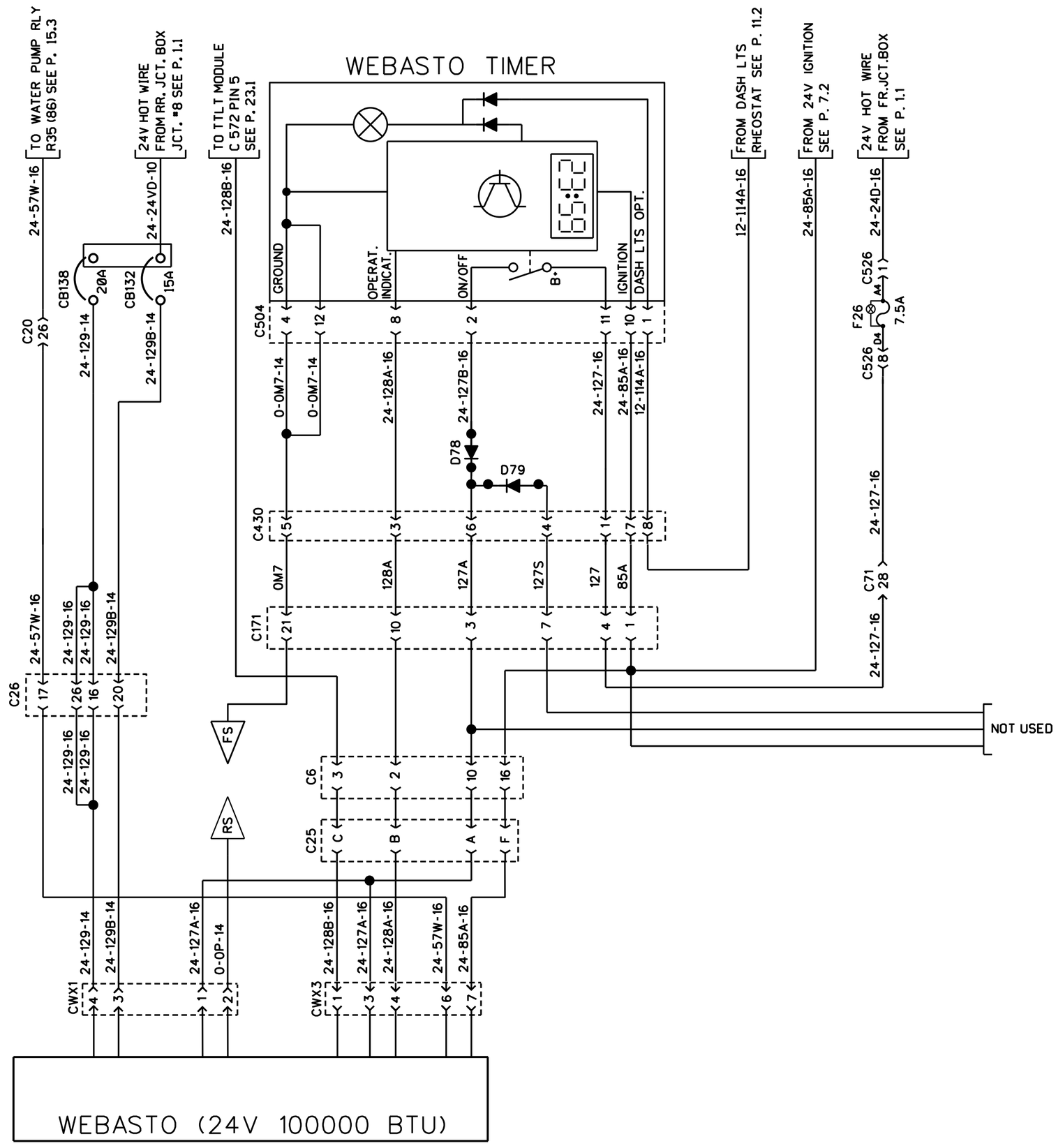

PRE-HEAT WATER HEATER (WEBASTO THERMO 300)

PREVOST	WIRING DIAGRAM	NO: D060993	PAGE: 14.1	REVISION 00

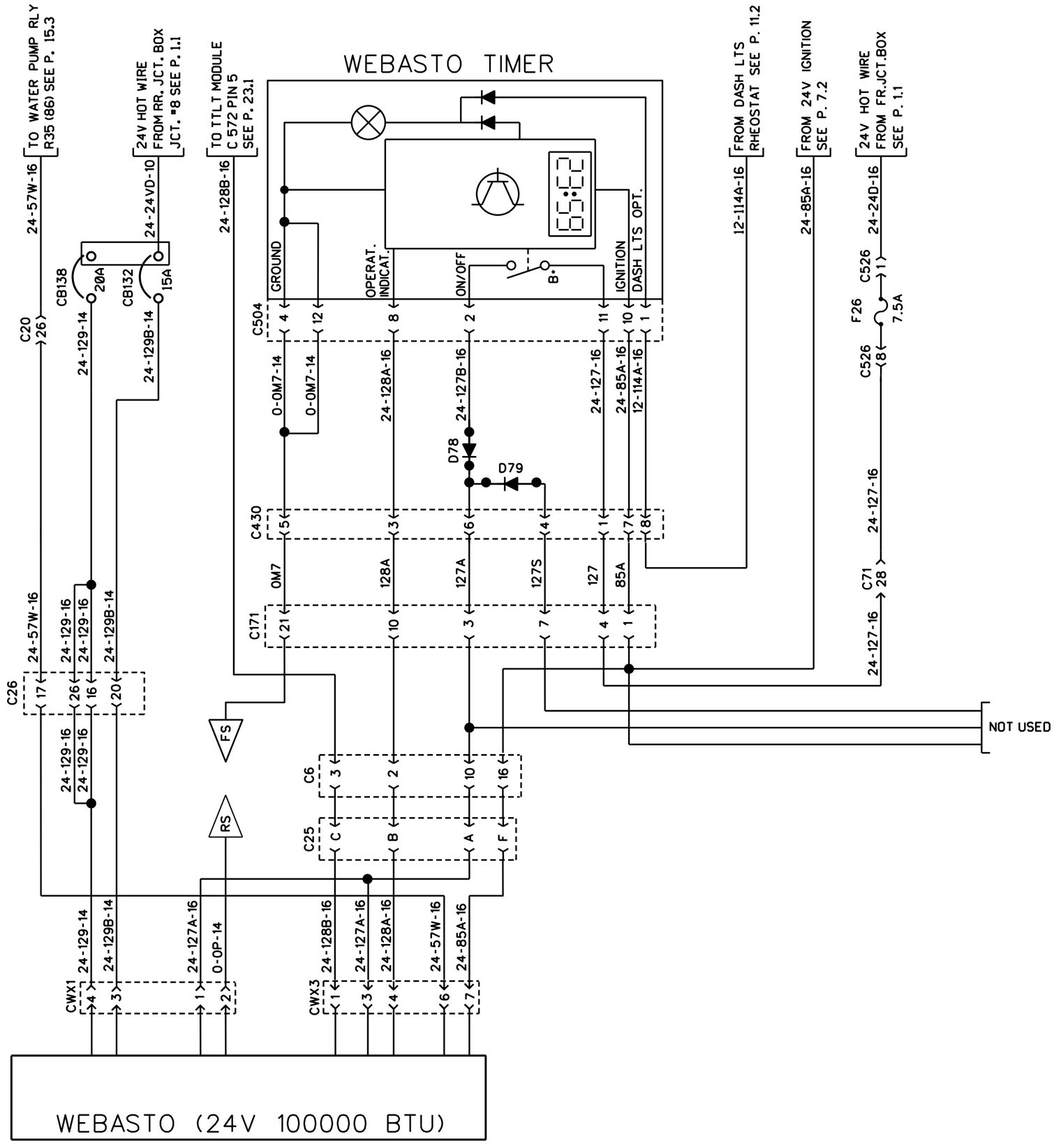

PRE-HEAT WATER HEATER (WEBASTO THERMO 300)

PREVOST	WIRING DIAGRAM	NO: D060993	PAGE: 14.1	REVISION 05

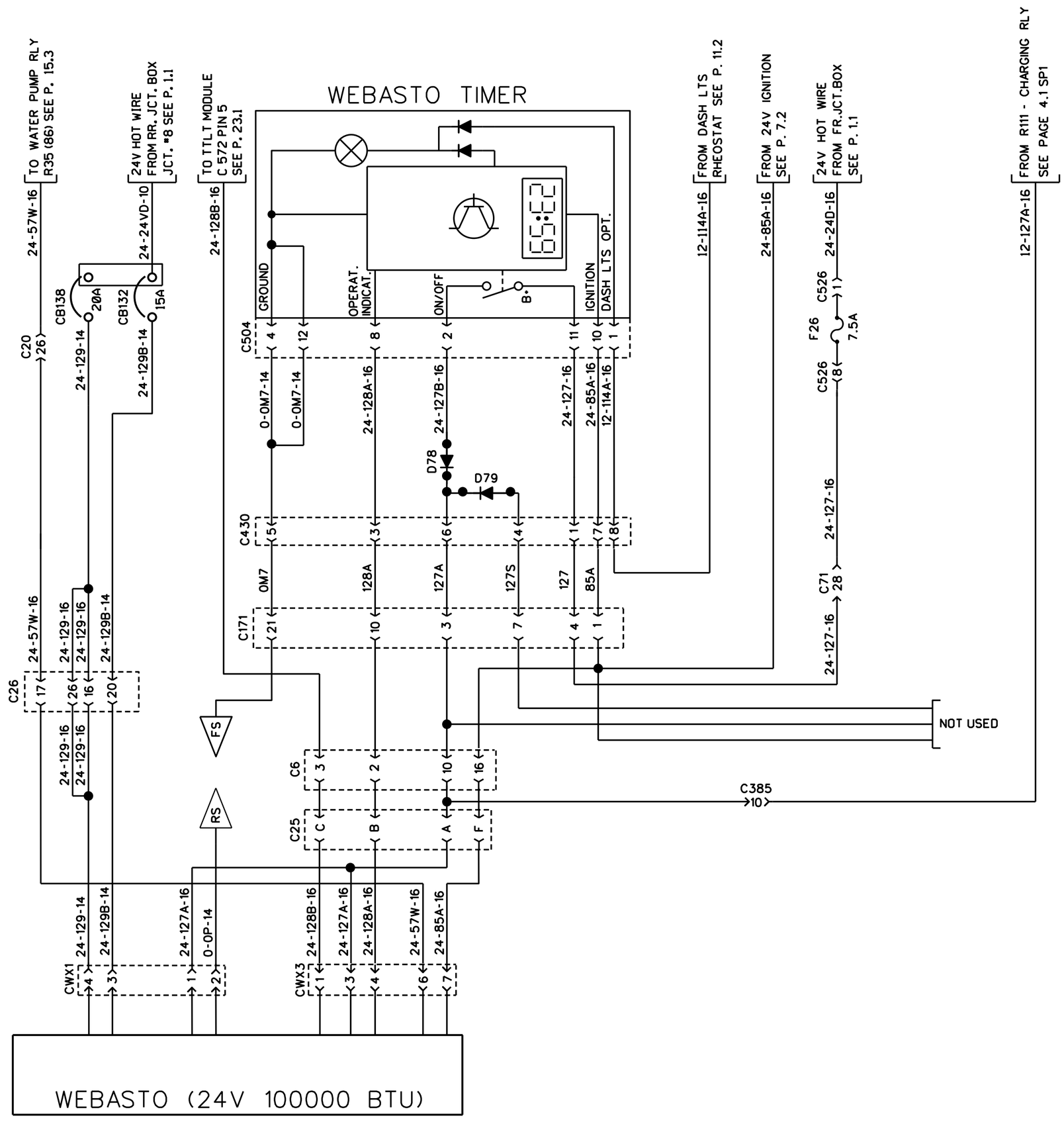

PRE-HEAT WATER HEATER (WEBASTO THERMO 300)

PREVOST	WIRING DIAGRAM	NO: D060993	PAGE: 14.1SP1	REVISION 00

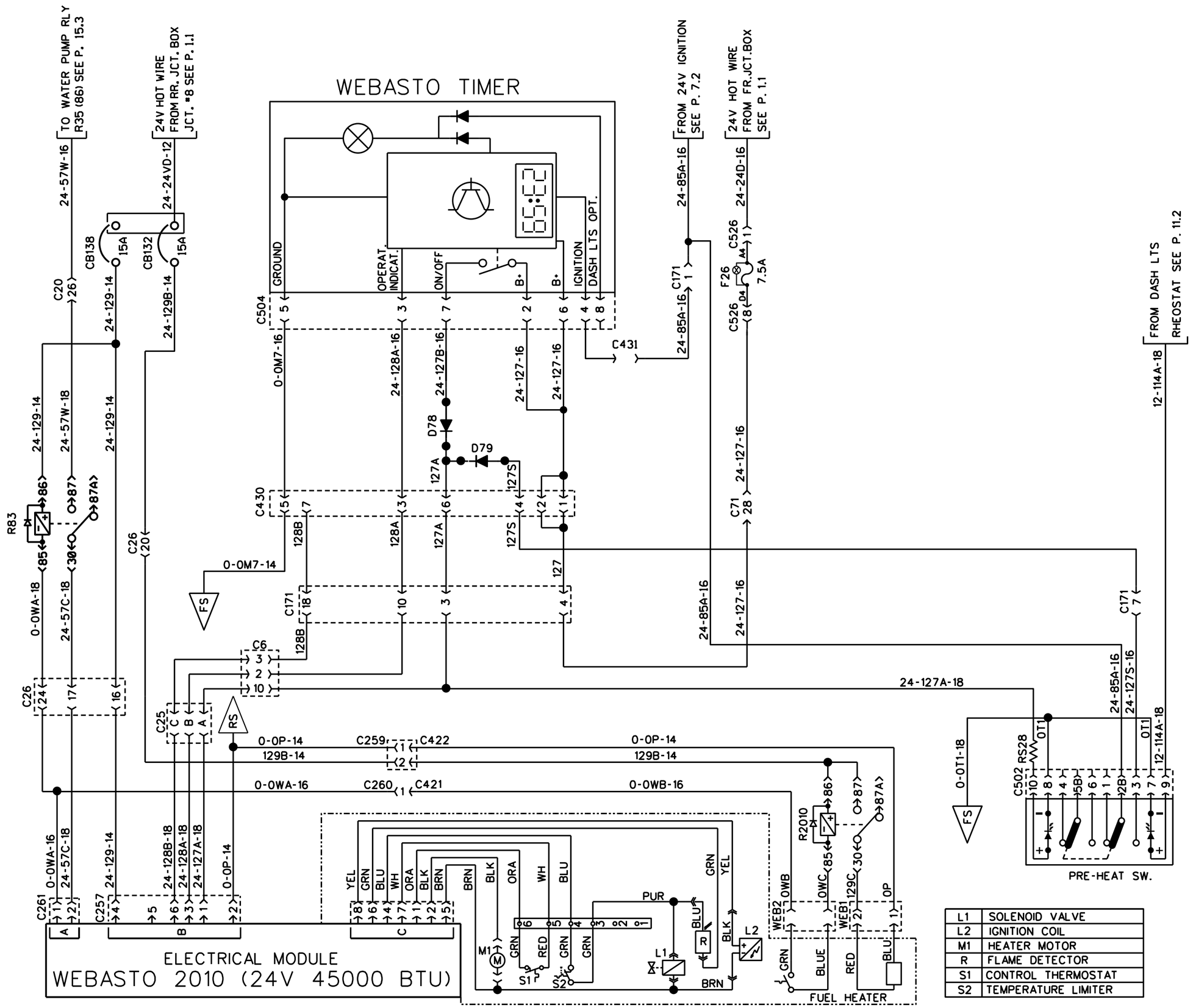

L1	SOLENOID VALVE
L2	IGNITION COIL
M1	HEATER MOTOR
R	FLAME DETECTOR
S1	CONTROL THERMOSTAT
S2	TEMPERATURE LIMITER

PRE-HEAT WATER HEATER (WEBASTO 2010)

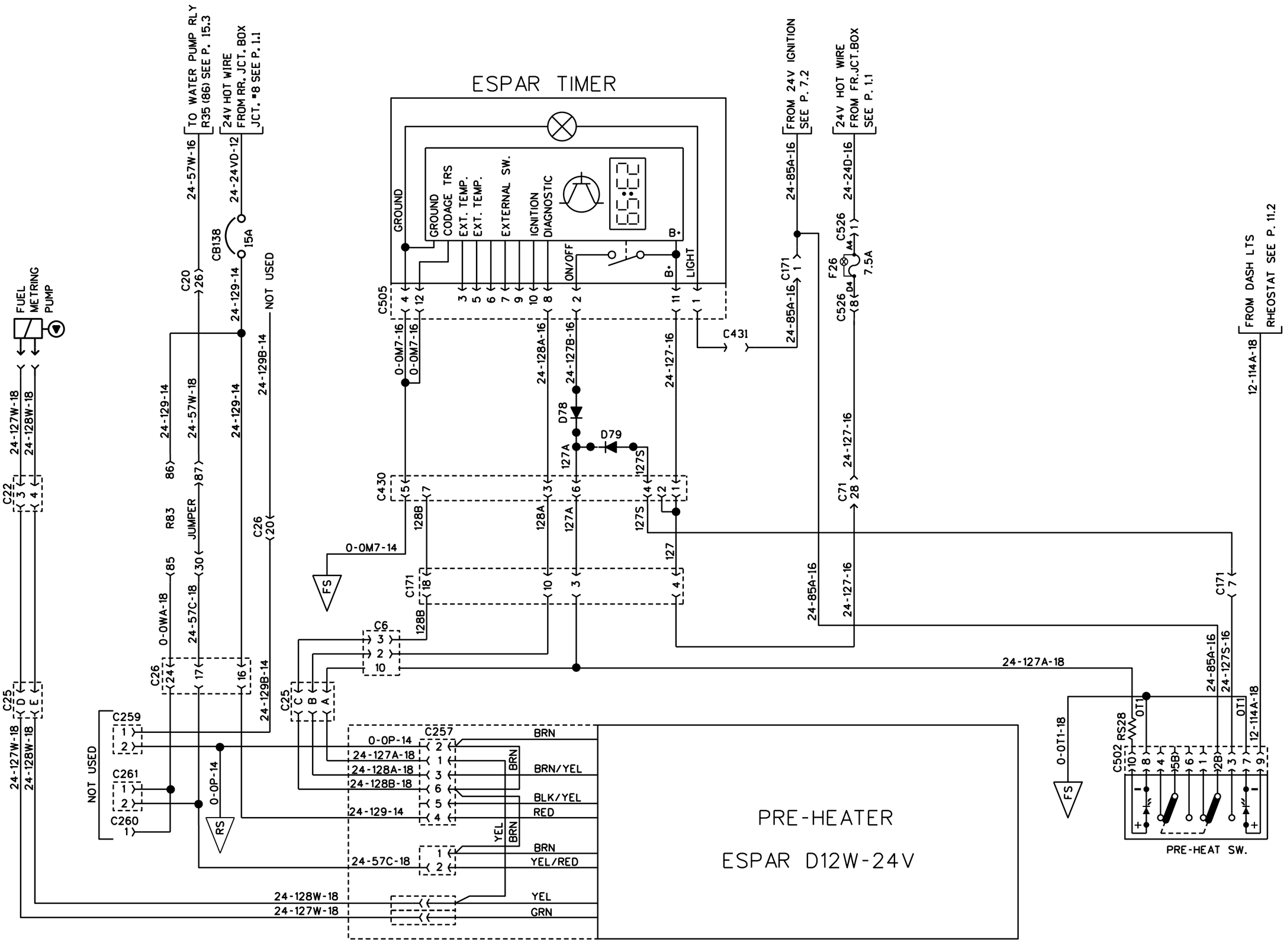

PRE-HEAT ESPAR D12W-24V (41000 BTU)

PREVOST	WIRING DIAGRAM	NO: D060993	PAGE: 14.3	REVISION 00

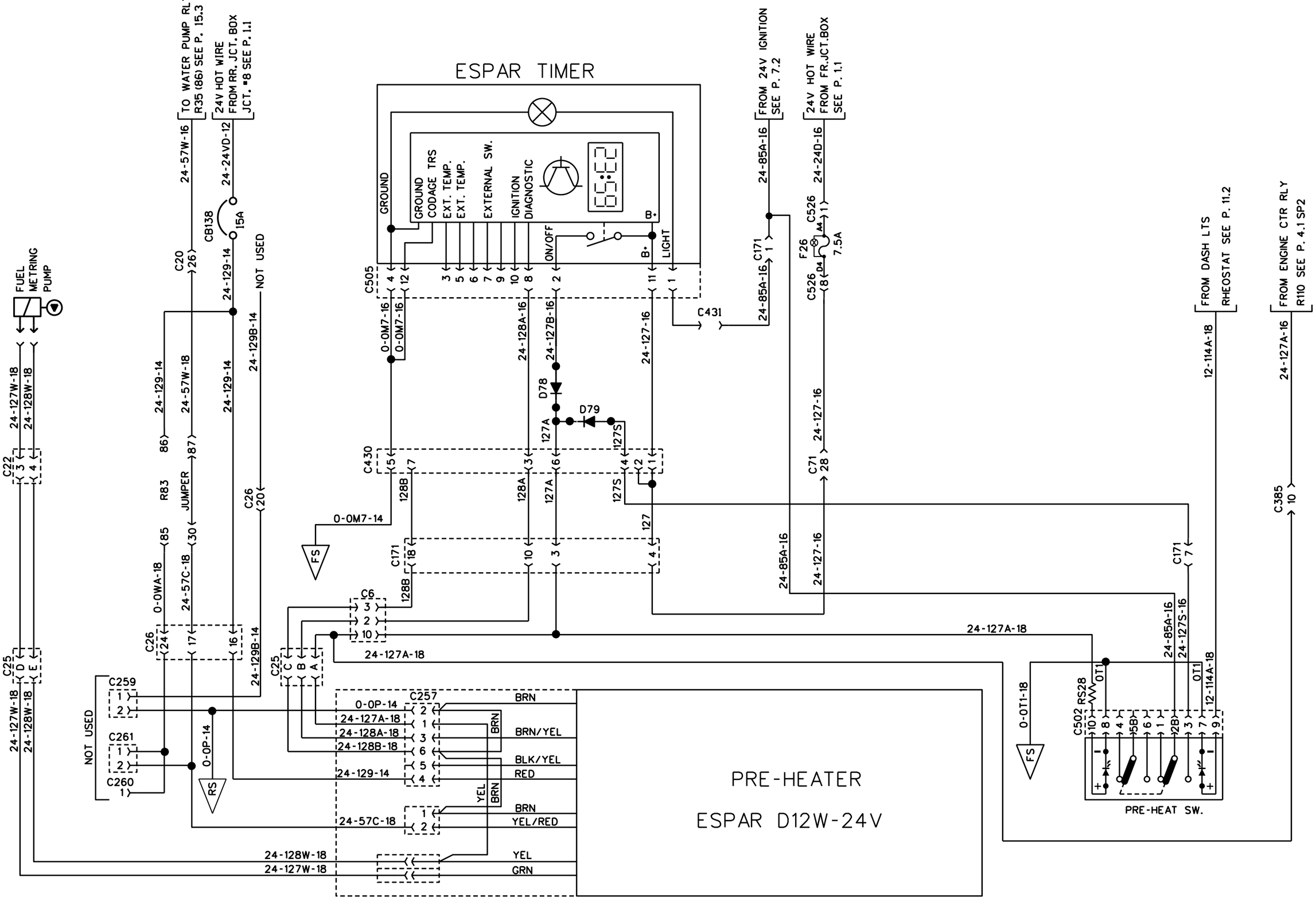

PRE-HEAT ESPAR D12W-24V (41000 BTU) AUTOMATIC ON BATERY CHARGER

PREVOST	WIRING DIAGRAM	NO: D060993	PAGE: 14.3 sp1	REVISION 00

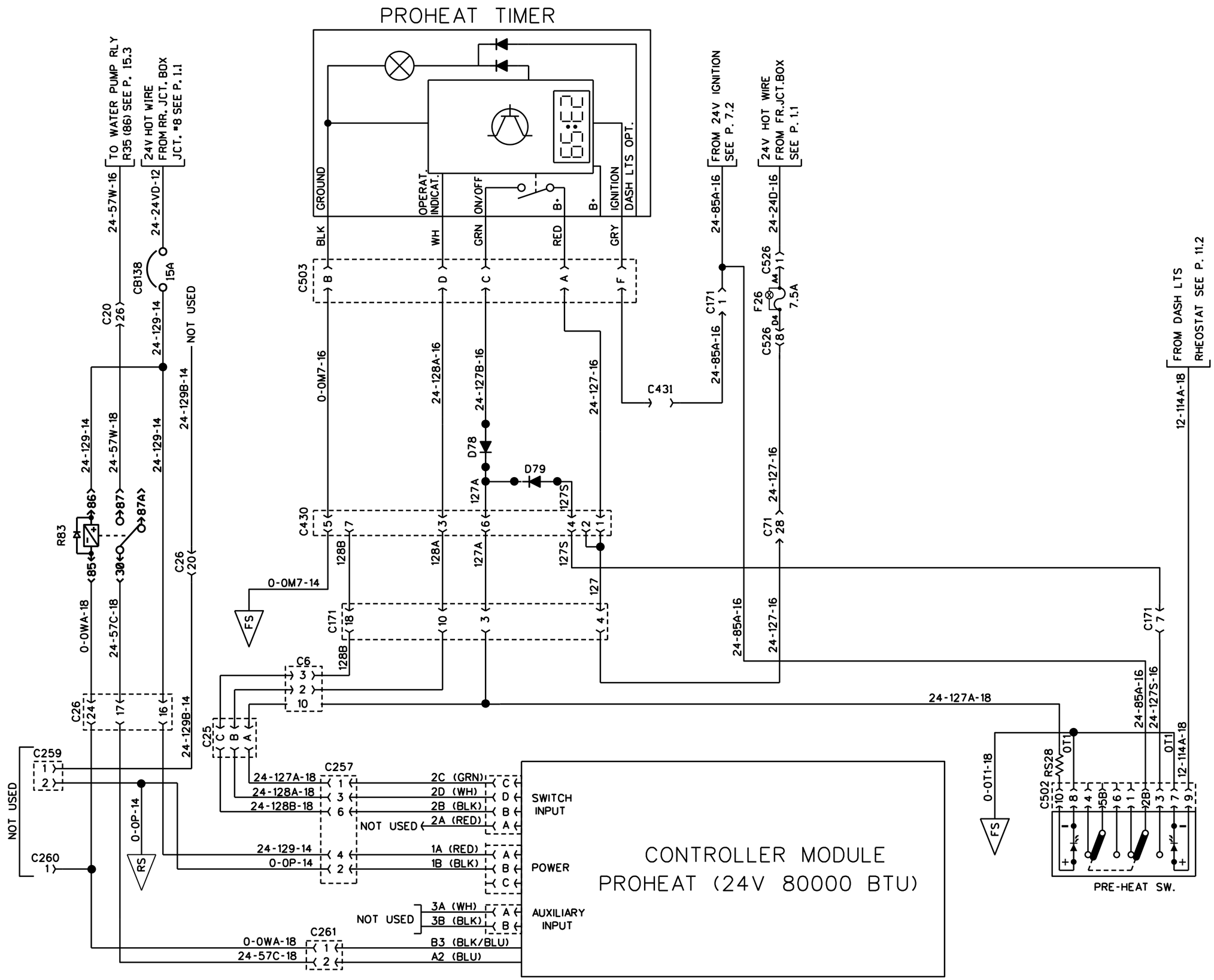

PRE-HEAT WATER HEATER PROHEAT (80000 BTU)

PREVOST	WIRING DIAGRAM	NO: D060993	PAGE: 14.4	REVISION 00

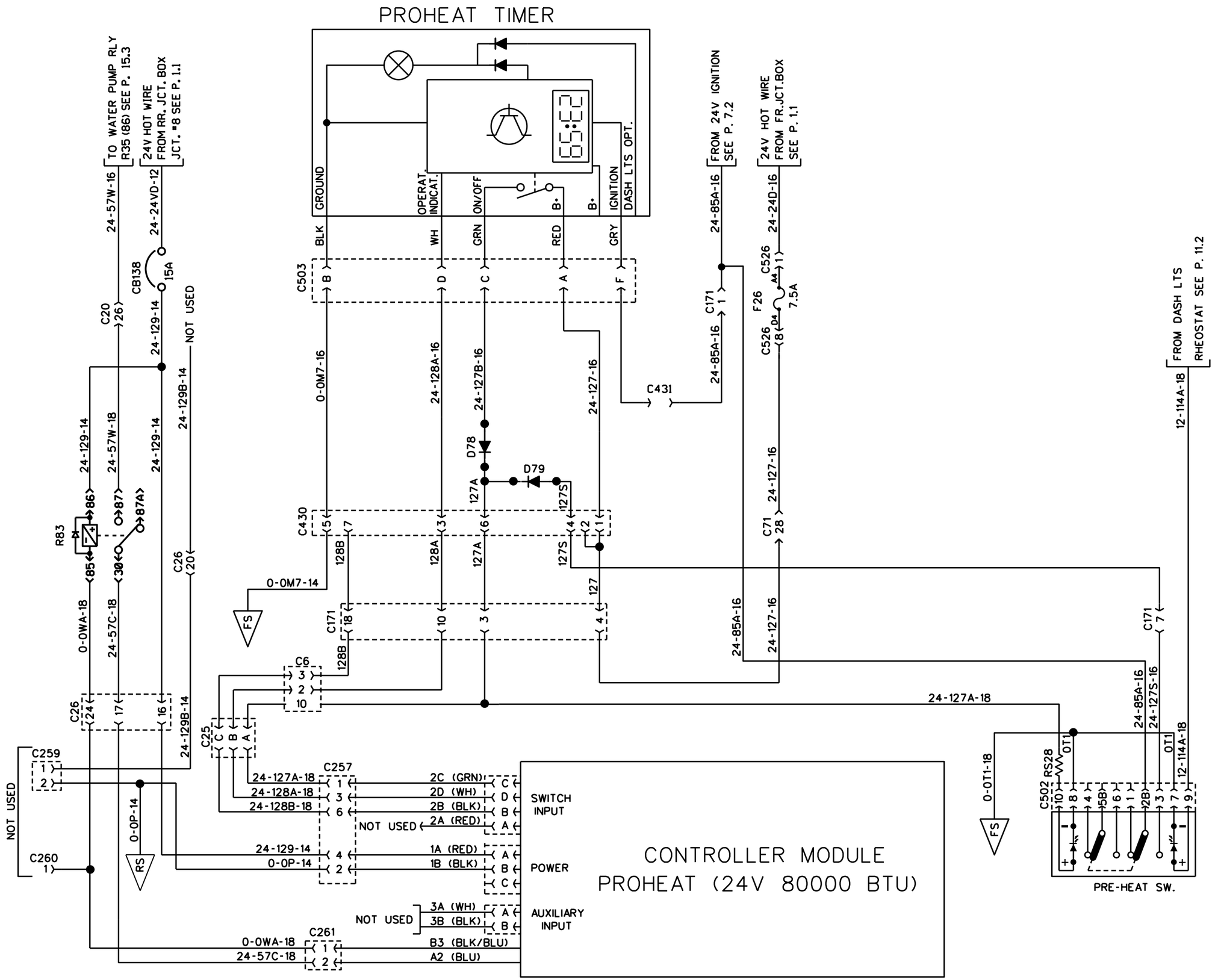

PRE-HEAT WATER HEATER PROHEAT (80000 BTU)

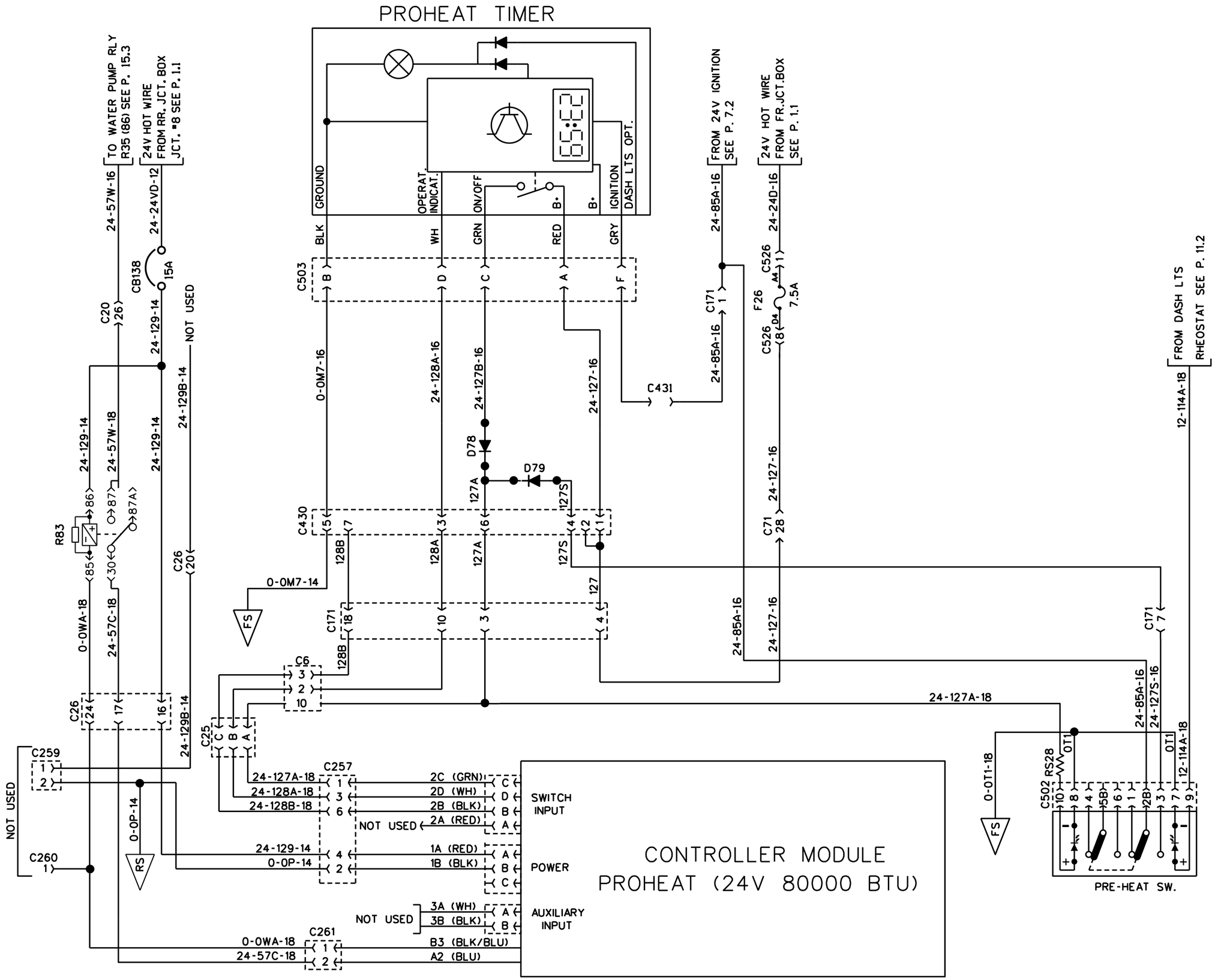

PRE-HEAT WATER HEATER PROHEAT (80000 BTU)

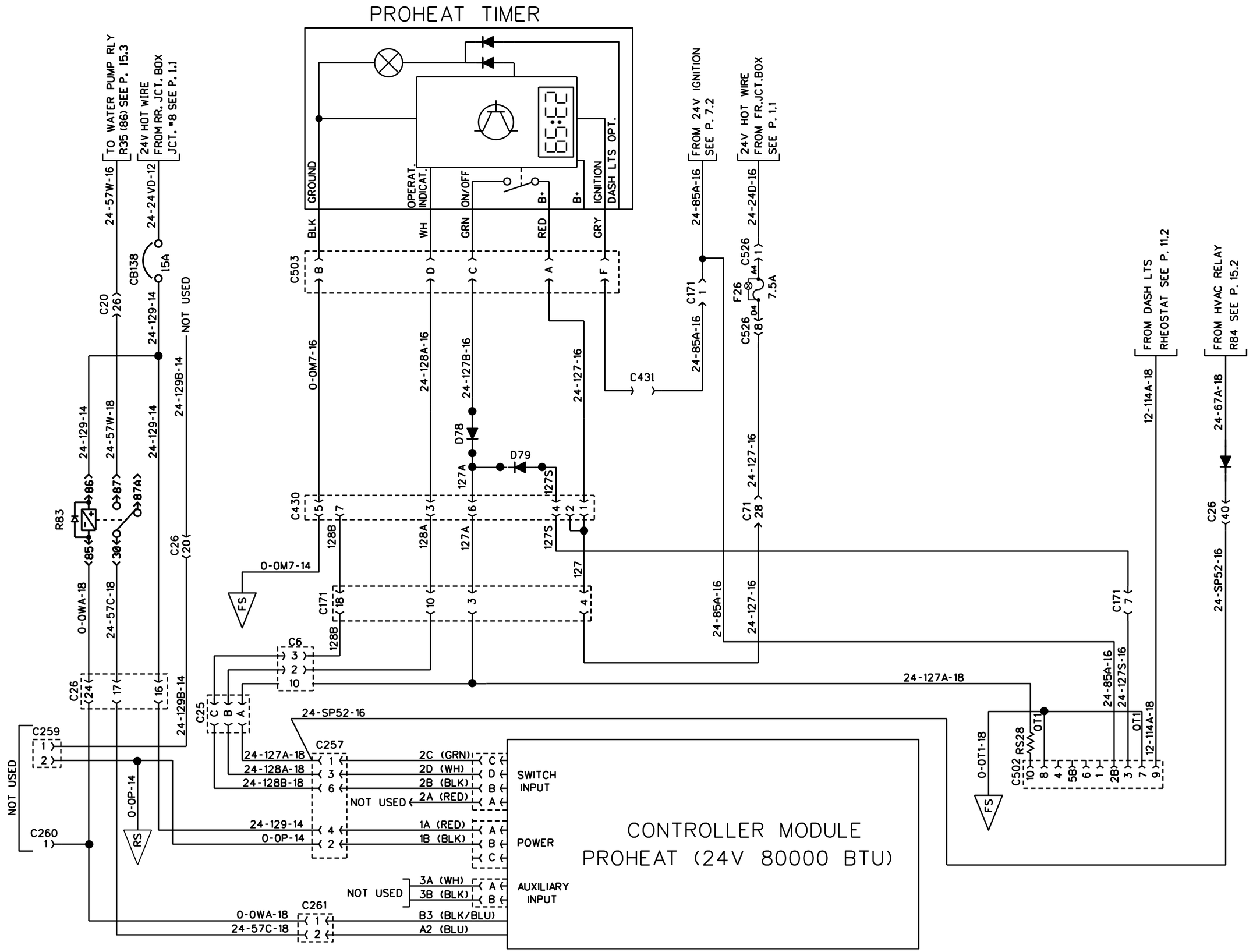

PRE-HEAT WATER HEATER (PROHEAT AUTOMATIC ON A/C)

PREVOST	WIRING DIAGRAM	NO: D060993	PAGE: 14.4sp1	REVISION 00

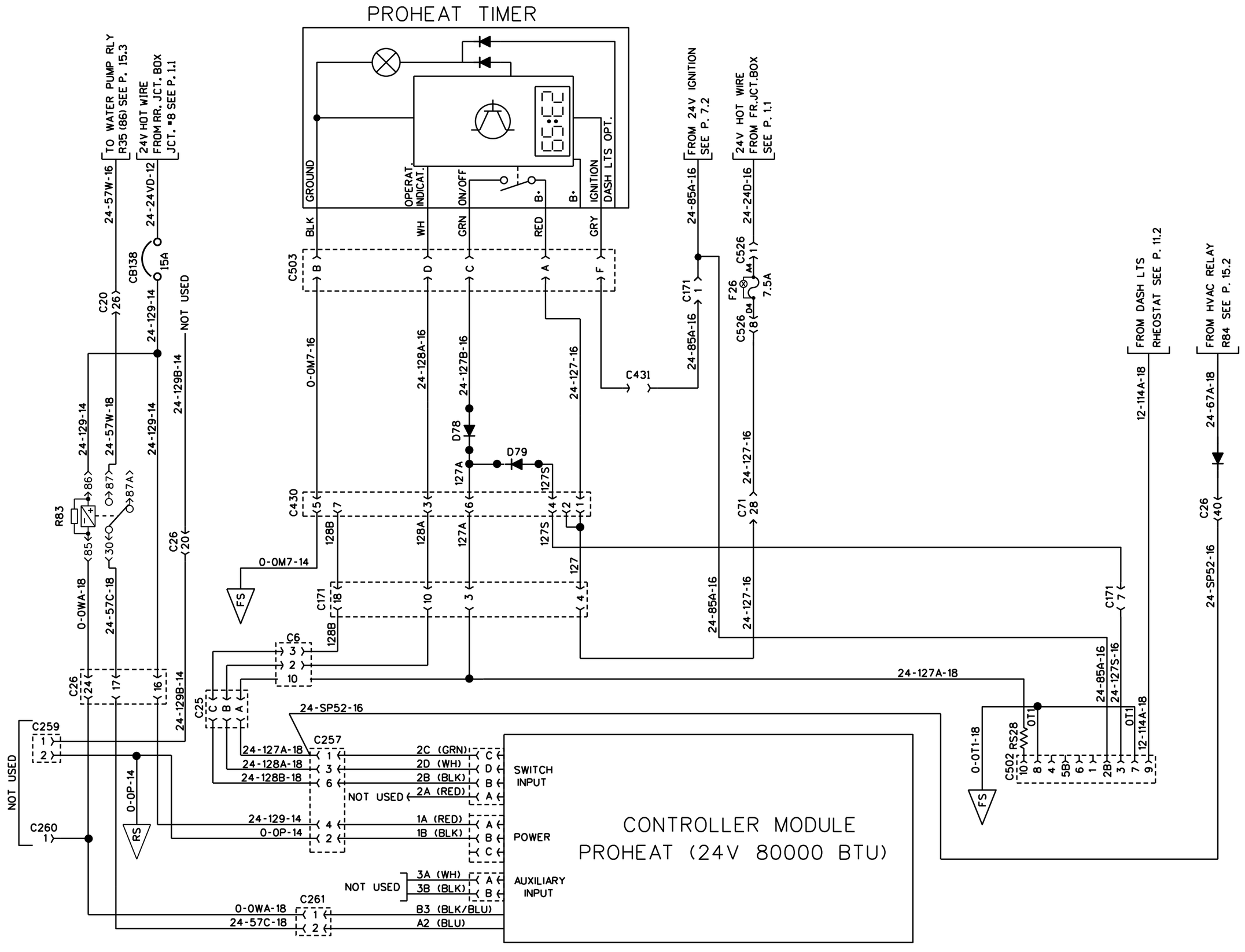

PRE-HEAT WATER HEATER (PROHEAT AUTOMATIC ON A/C)

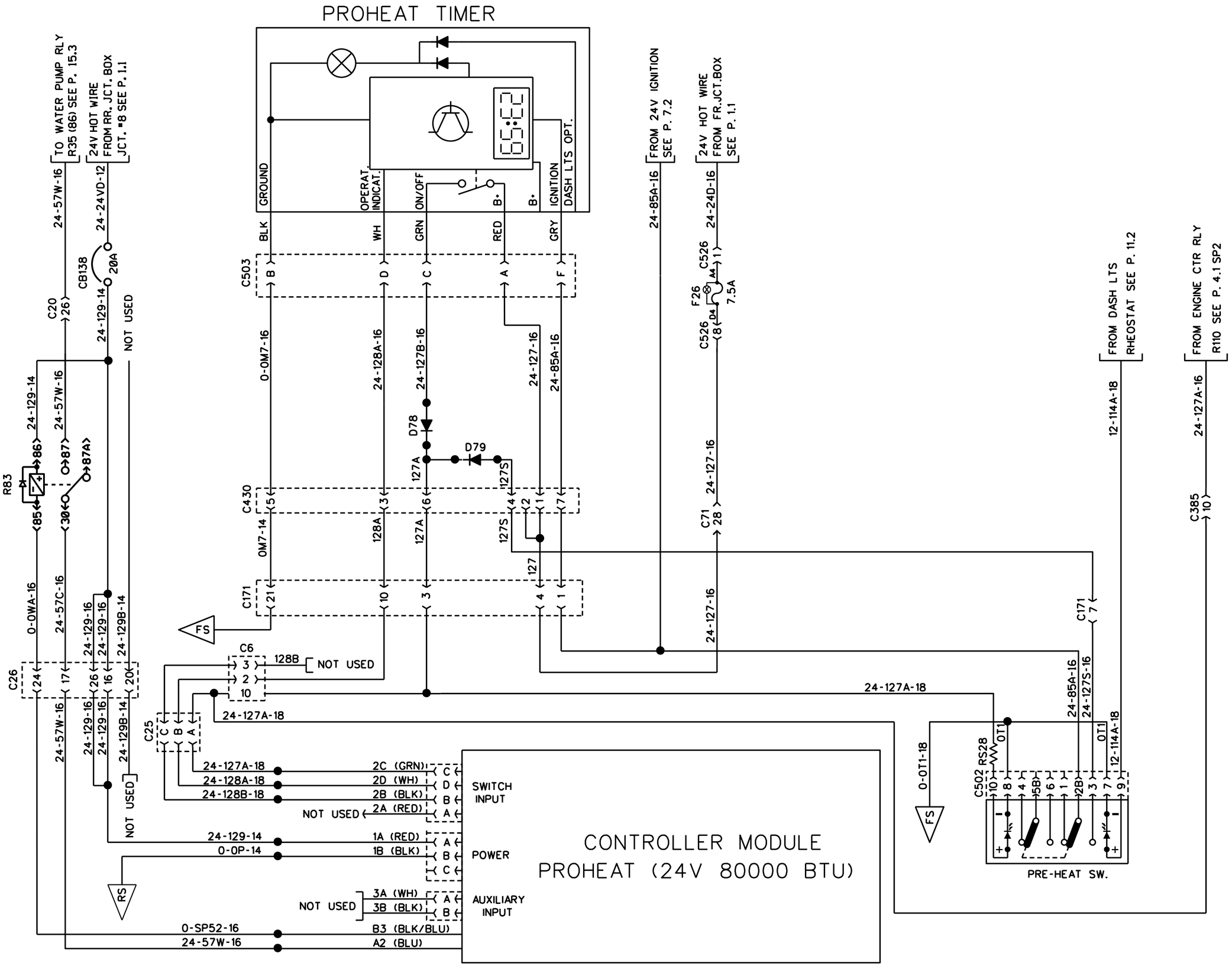

PRE-HEAT WATER HEATER PROHEAT AUTOMATIC ON BATTERY CHARGER

PREVOST	WIRING DIAGRAM	NO: D060993	PAGE: 14.4sp2	REVISION 00

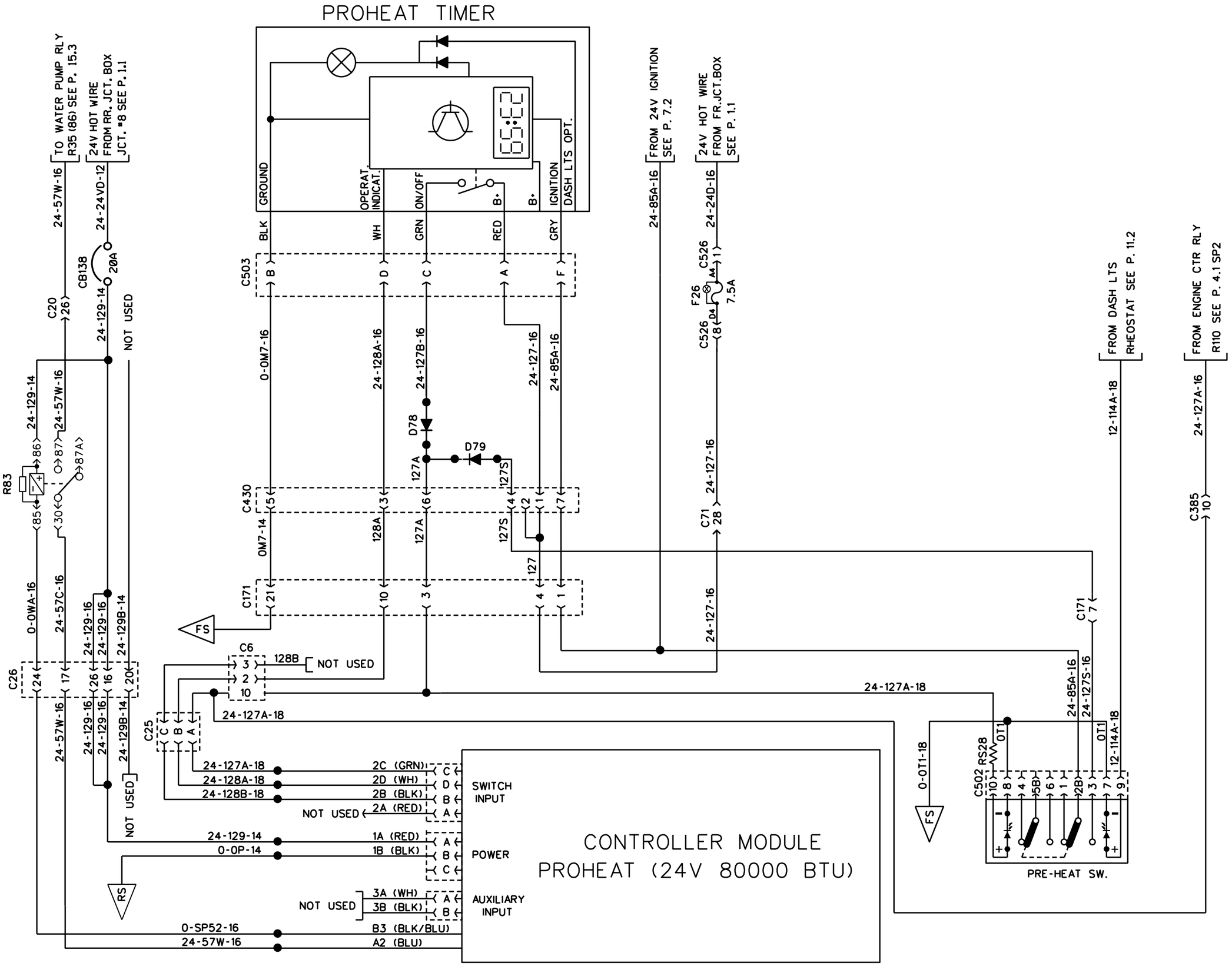

PRE-HEAT WATER HEATER PROHEAT AUTOMATIC ON BATTERY CHARGER

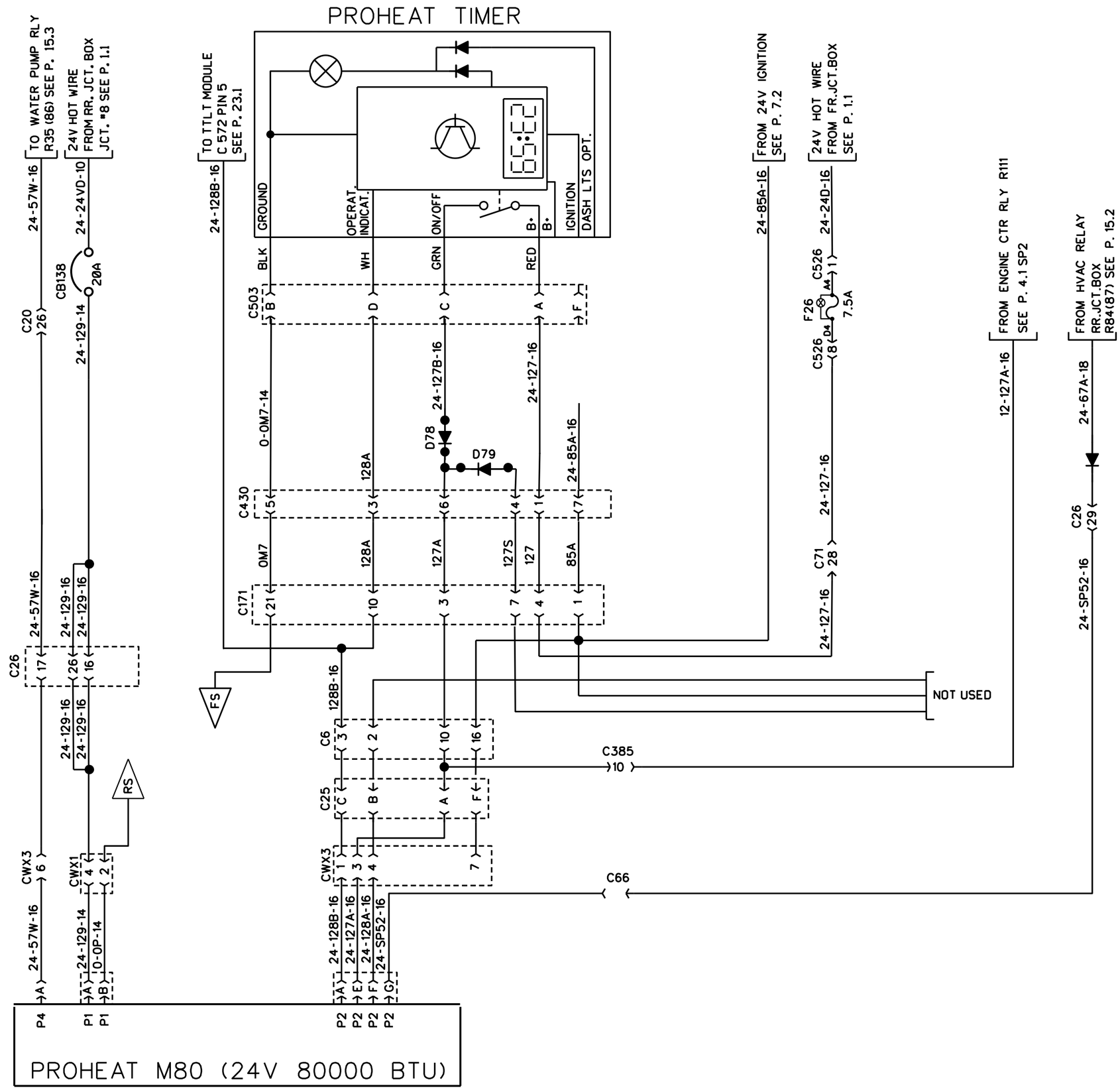

PRE-HEAT WATER HEATER (PROHEAT M80 AUTOMATIC ON A/C AND BATTERY CHARGER)

PREVOST	WIRING DIAGRAM	NO: D060993	PAGE: 14.4sp3	REVISION 00

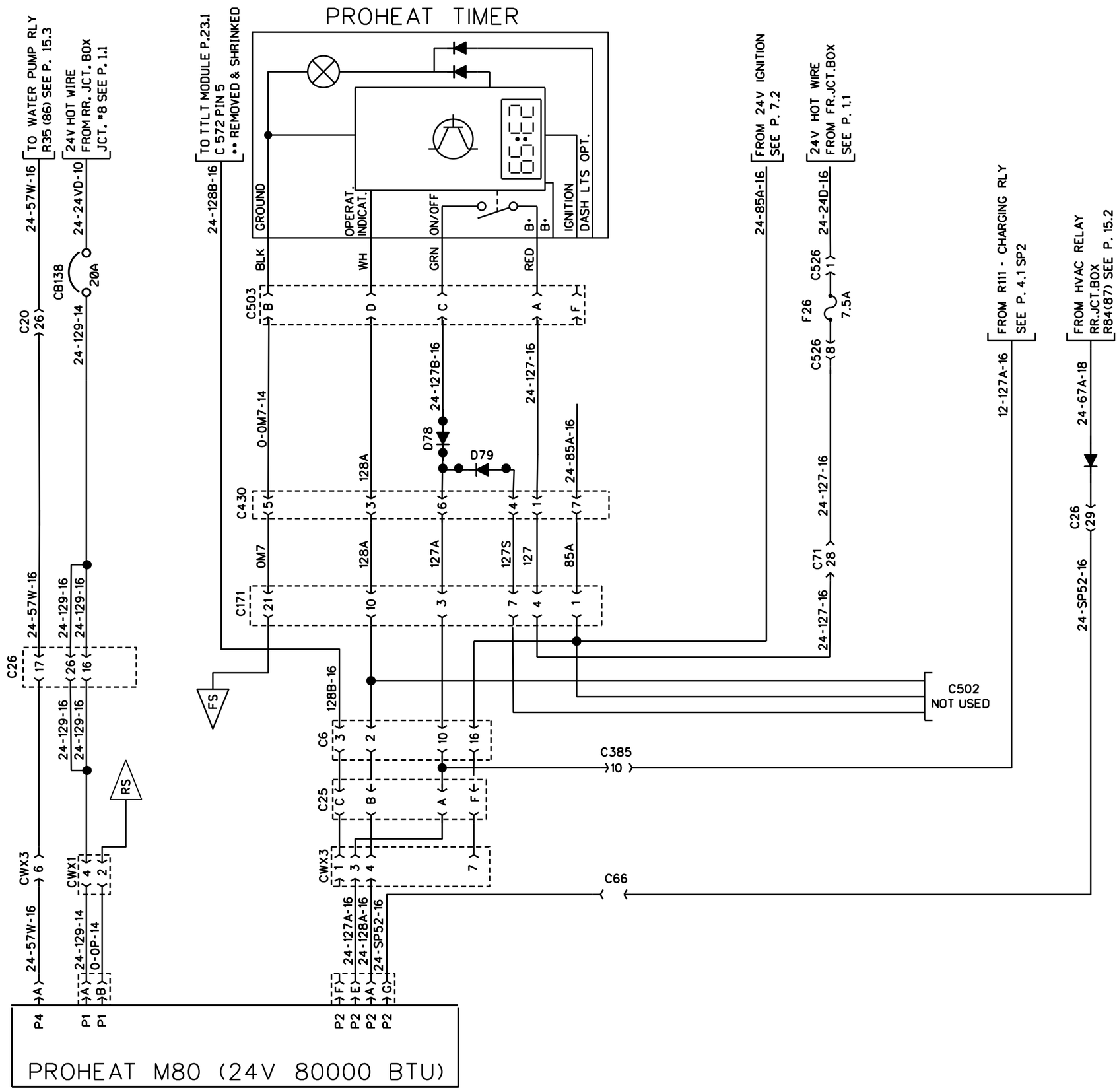

PRE-HEAT WATER HEATER (PROHEAT M80 AUTOMATIC ON A/C AND BATTERY CHARGER)

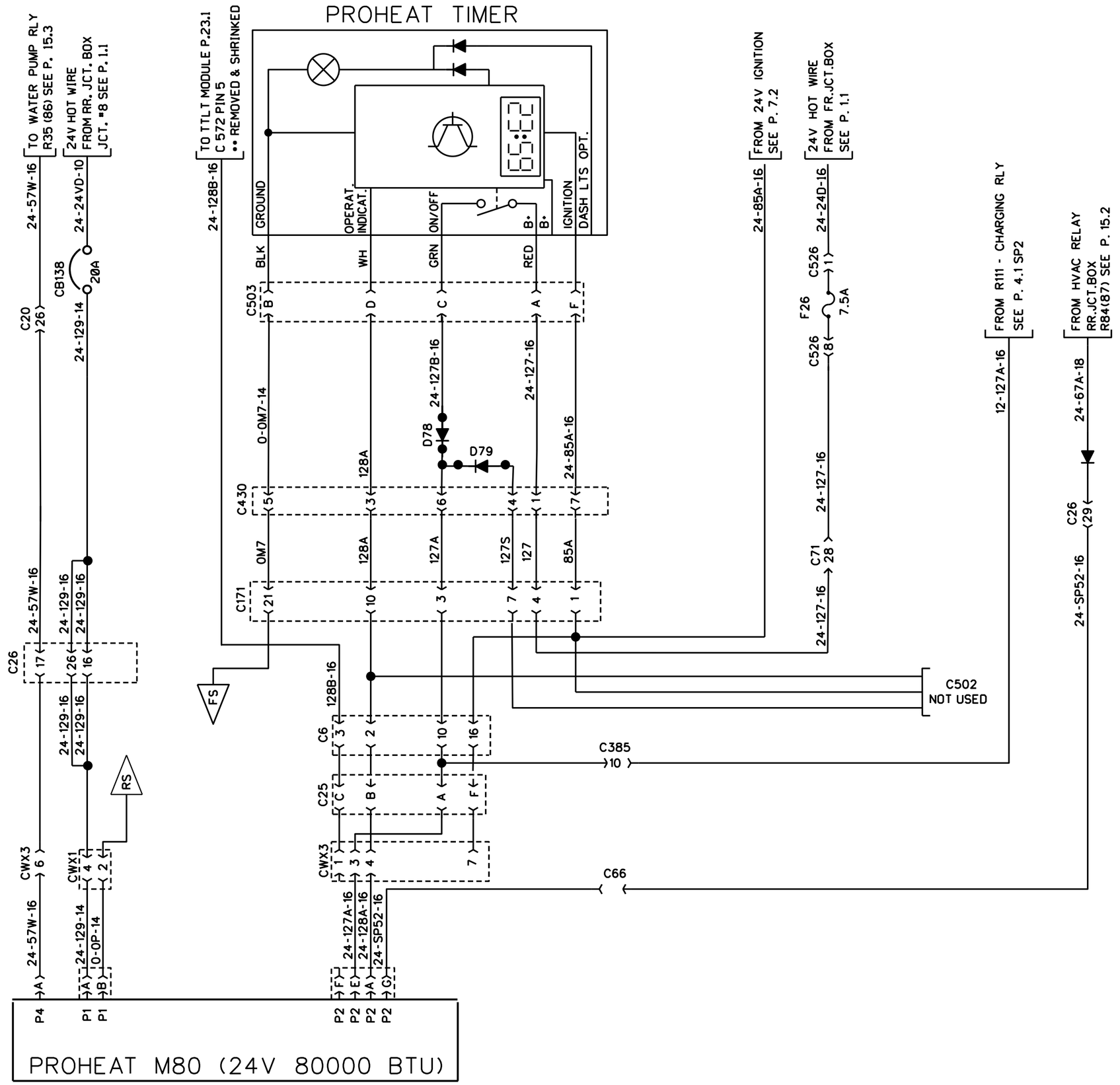

PRE-HEAT WATER HEATER (PROHEAT M80 AUTOMATIC ON A/C AND BATTERY CHARGER)

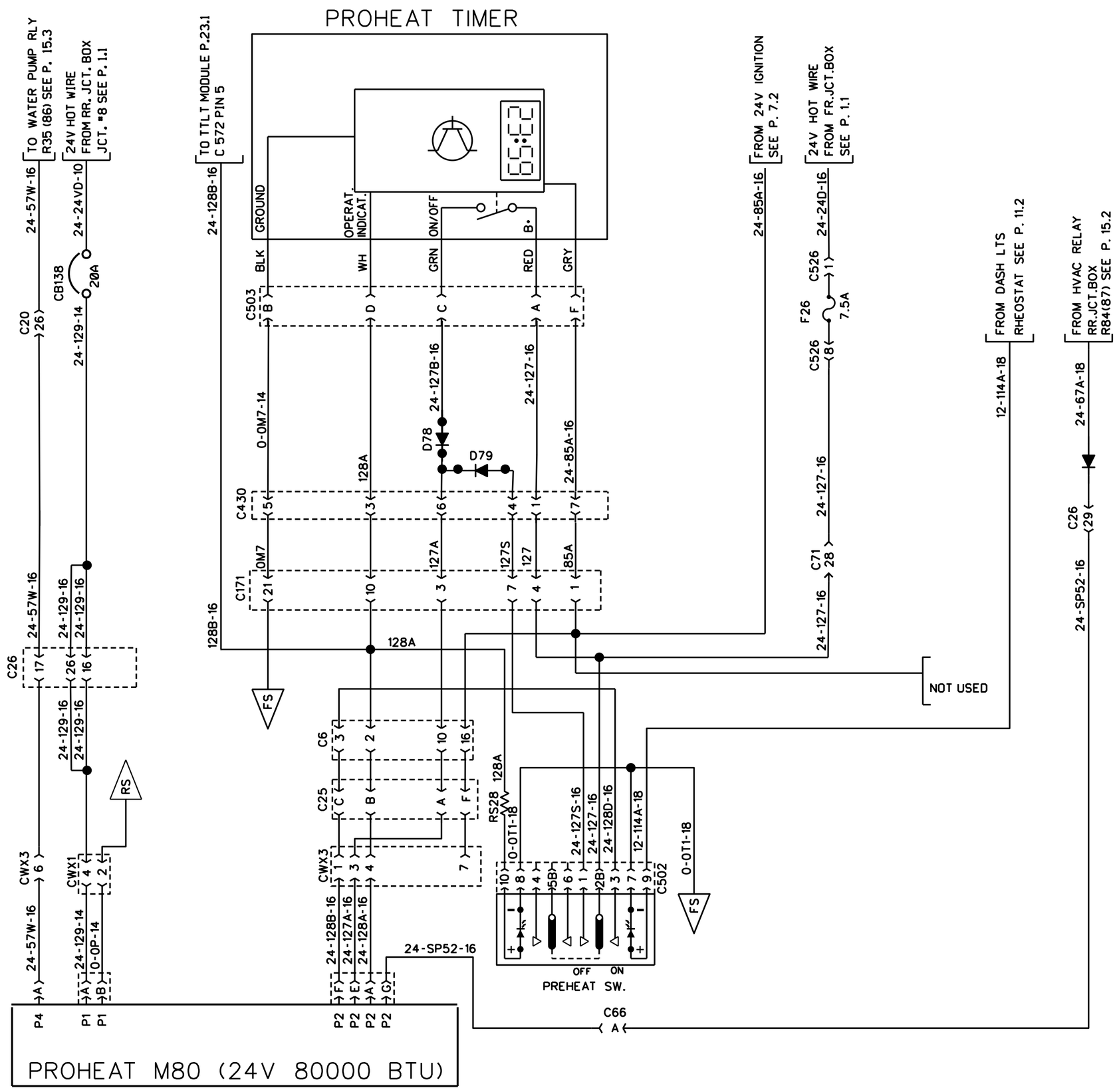

PRE-HEAT WATER HEATER (PROHEAT M80 AUTOMATIC ON A/C AND ON/OFF SWITCH)

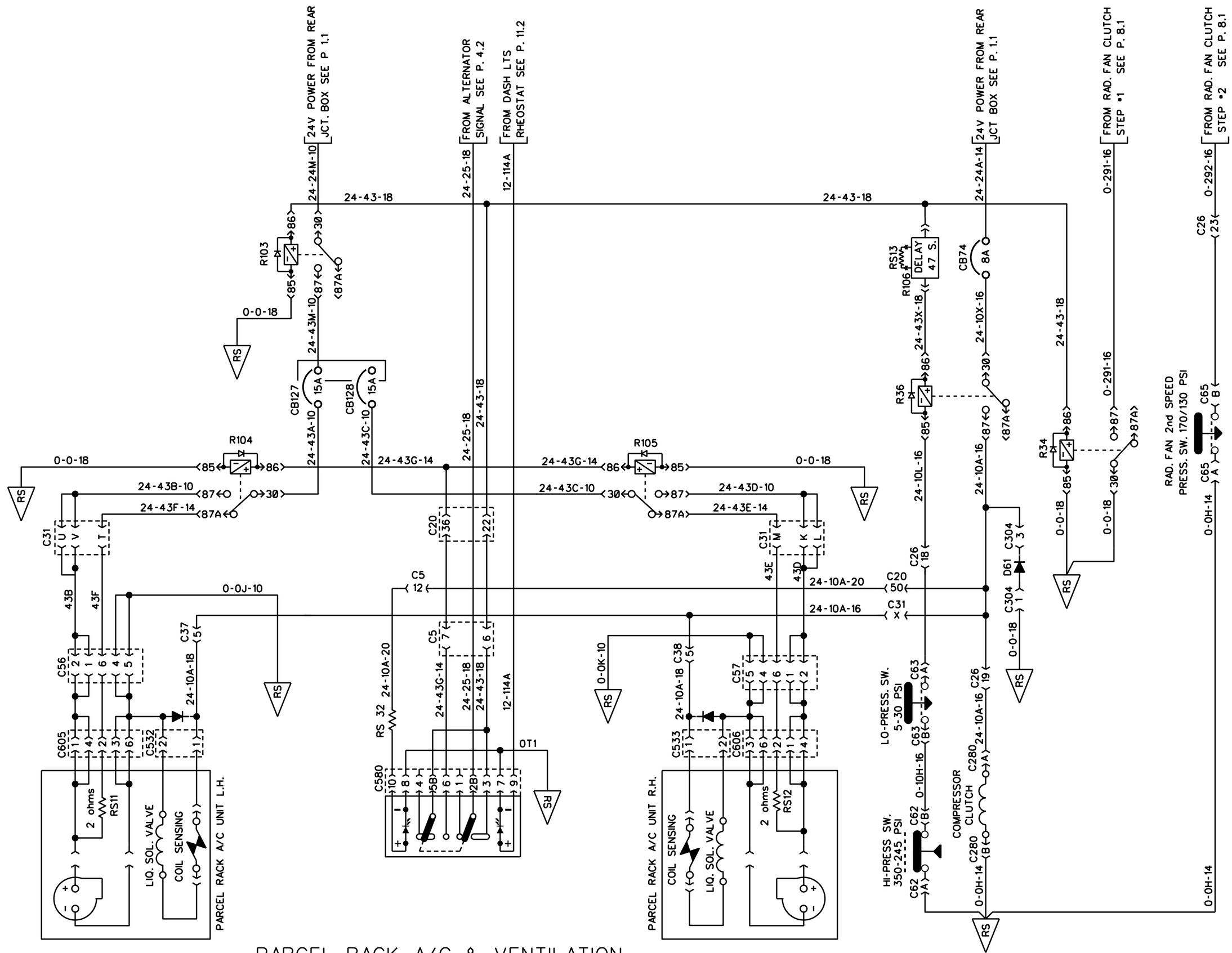

PARCEL RACK A/C & VENTILATION

PREVOST	WIRING DIAGRAM	NO: D060993	PAGE: 15.1	REVISION 00

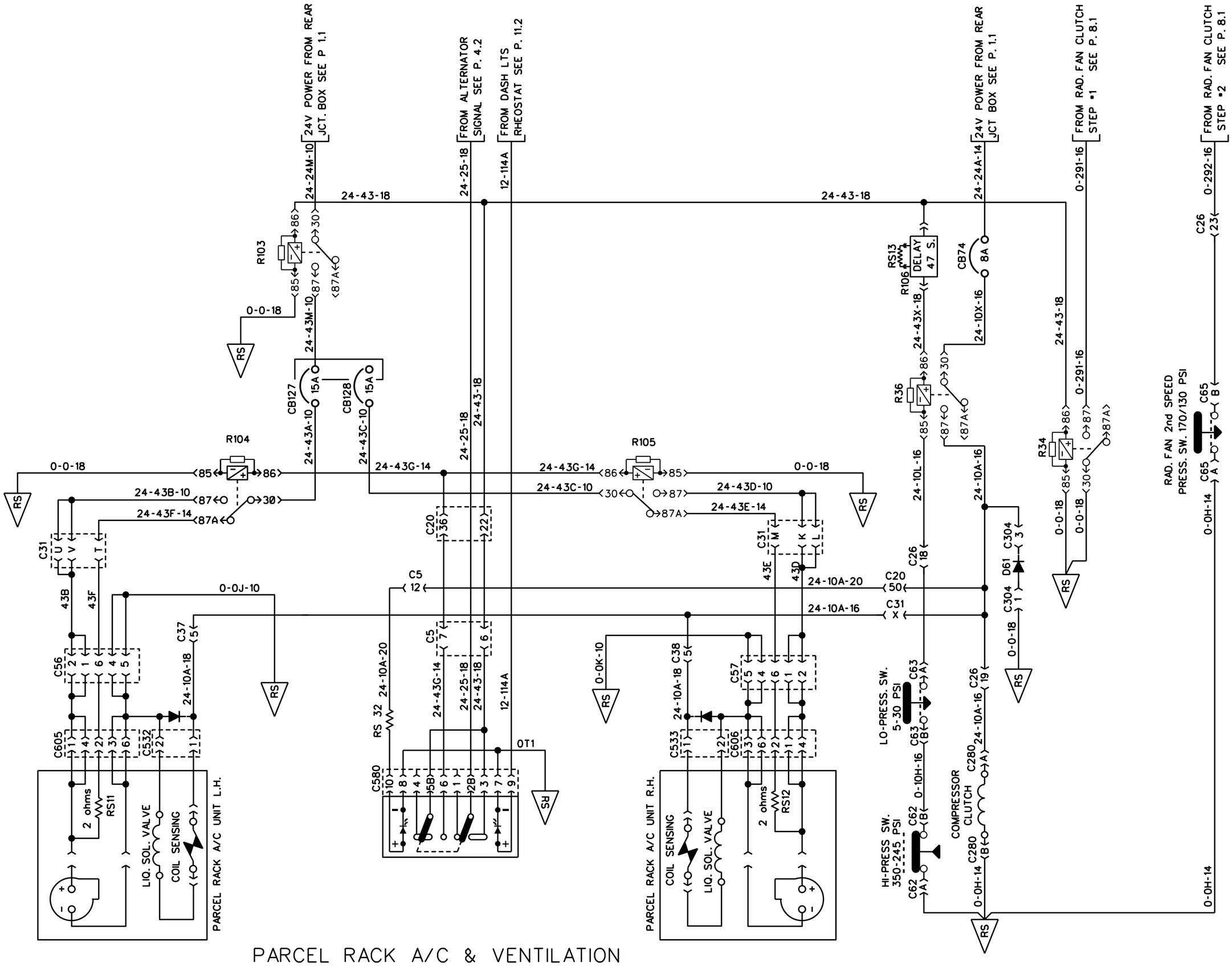

PARCEL RACK A/C & VENTILATION

PREVOST	WIRING DIAGRAM	NO: D060993	PAGE: 15.1	REVISION 15

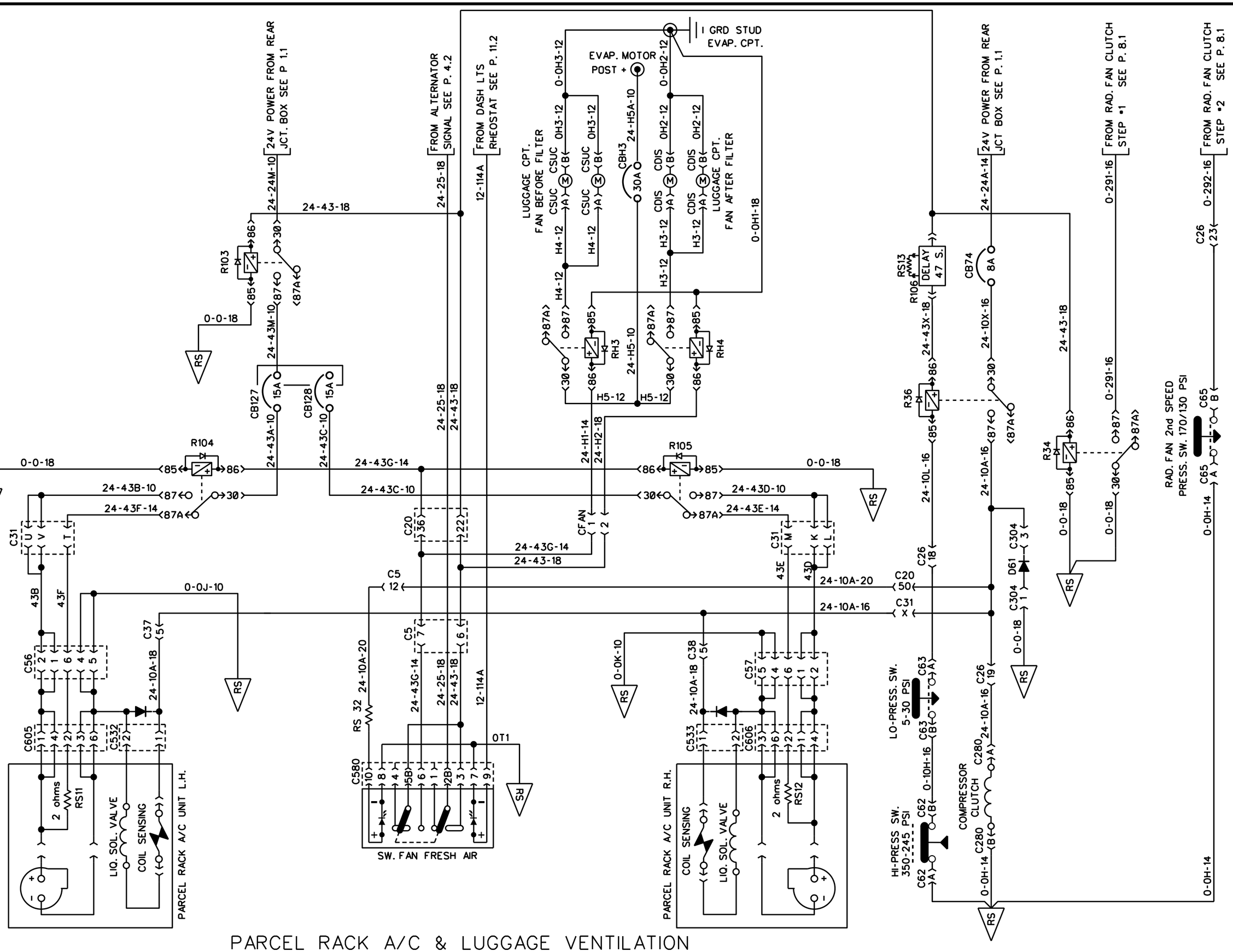

PARCEL RACK A/C & LUGGAGE VENTILATION

PREVOST	WIRING DIAGRAM	NO: D060993	PAGE: 15.1SP1	REVISION 00

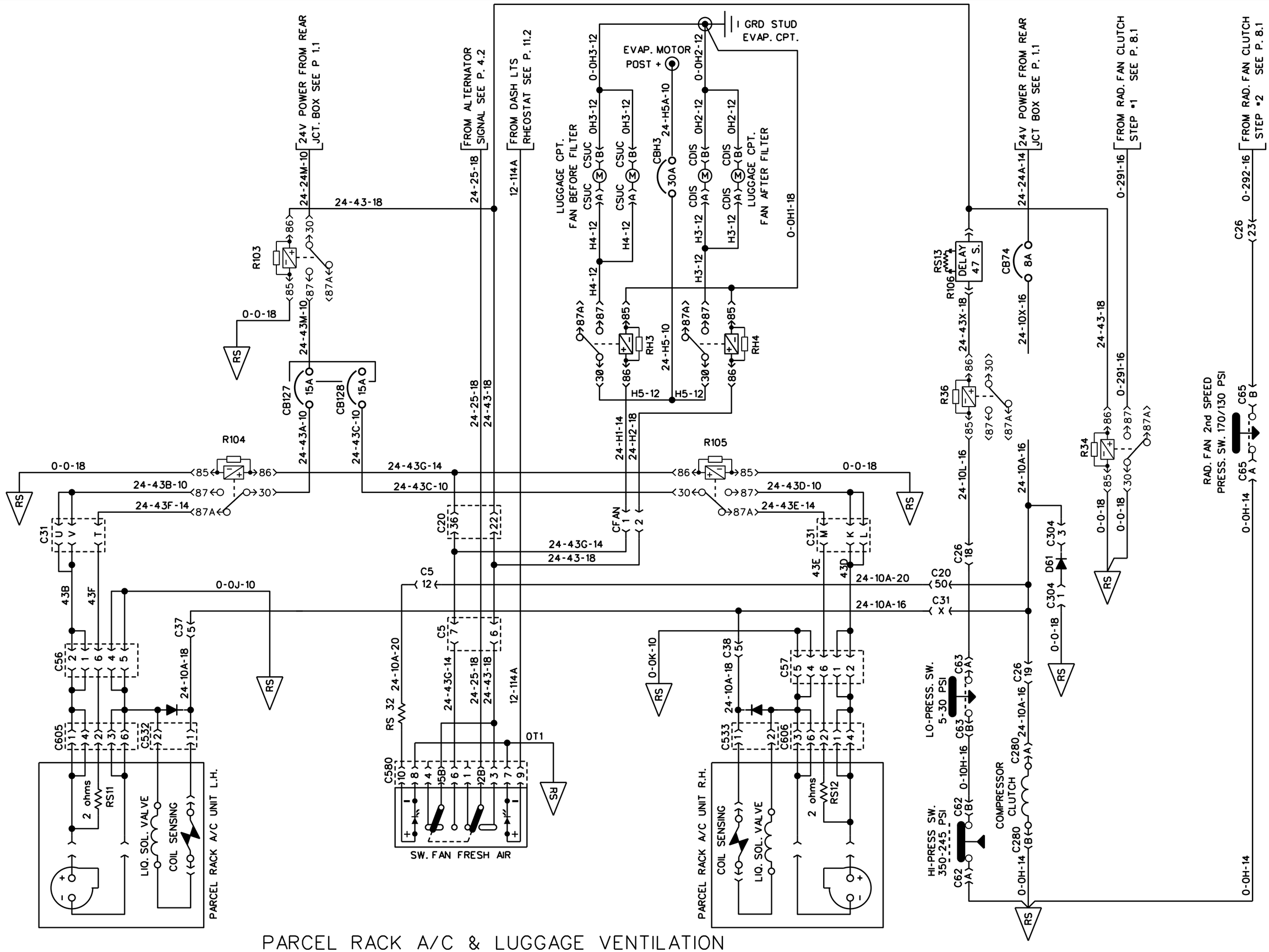

PARCEL RACK A/C & LUGGAGE VENTILATION

PREVOST	WIRING DIAGRAM	NO: D060993	PAGE: 15.1SP1	REVISION 15

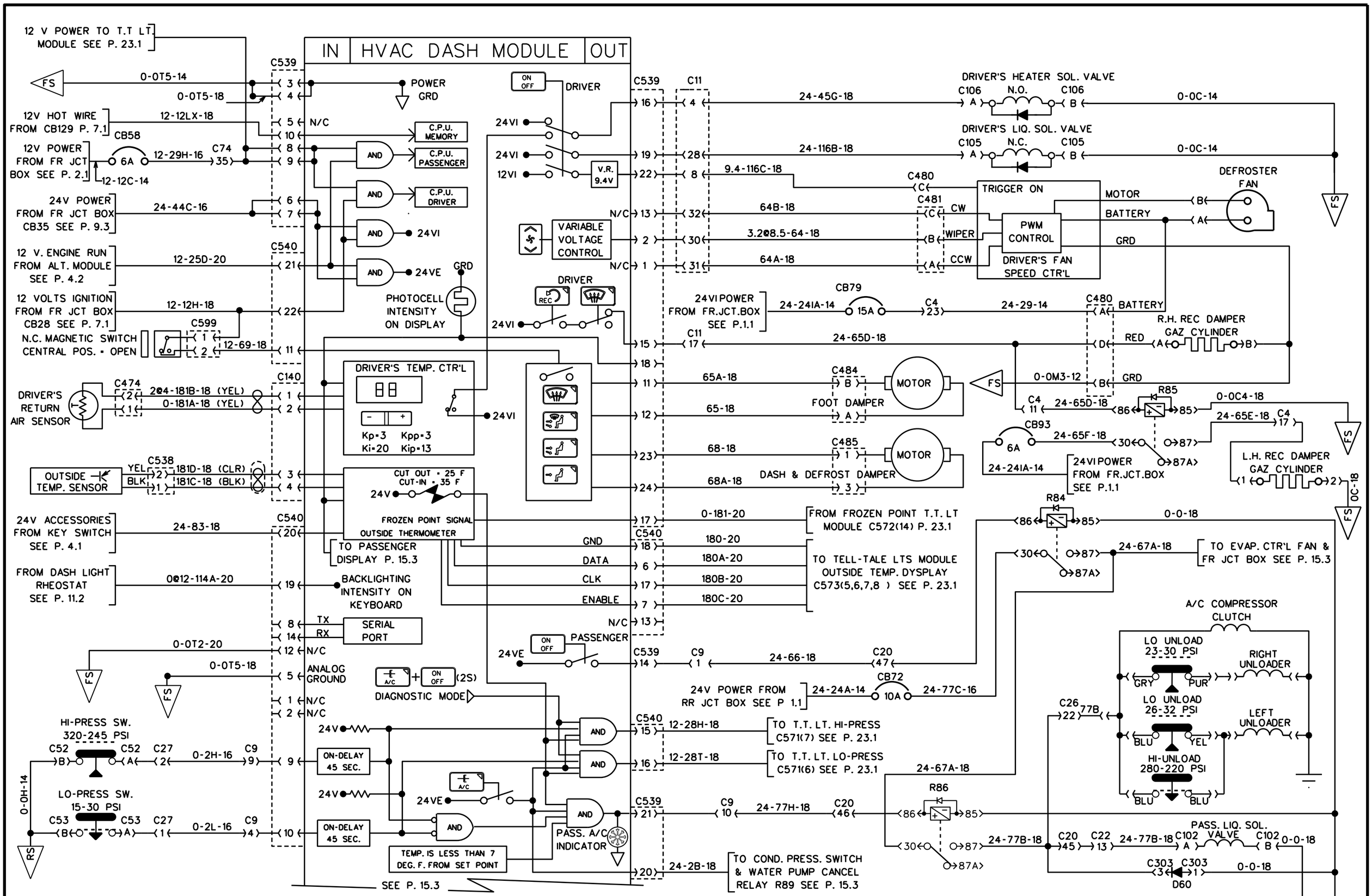

A/C AND HEAT SYSTEM

PREVOST	WIRING DIAGRAM	NO: D060993	PAGE: 15.2	REVISION 00

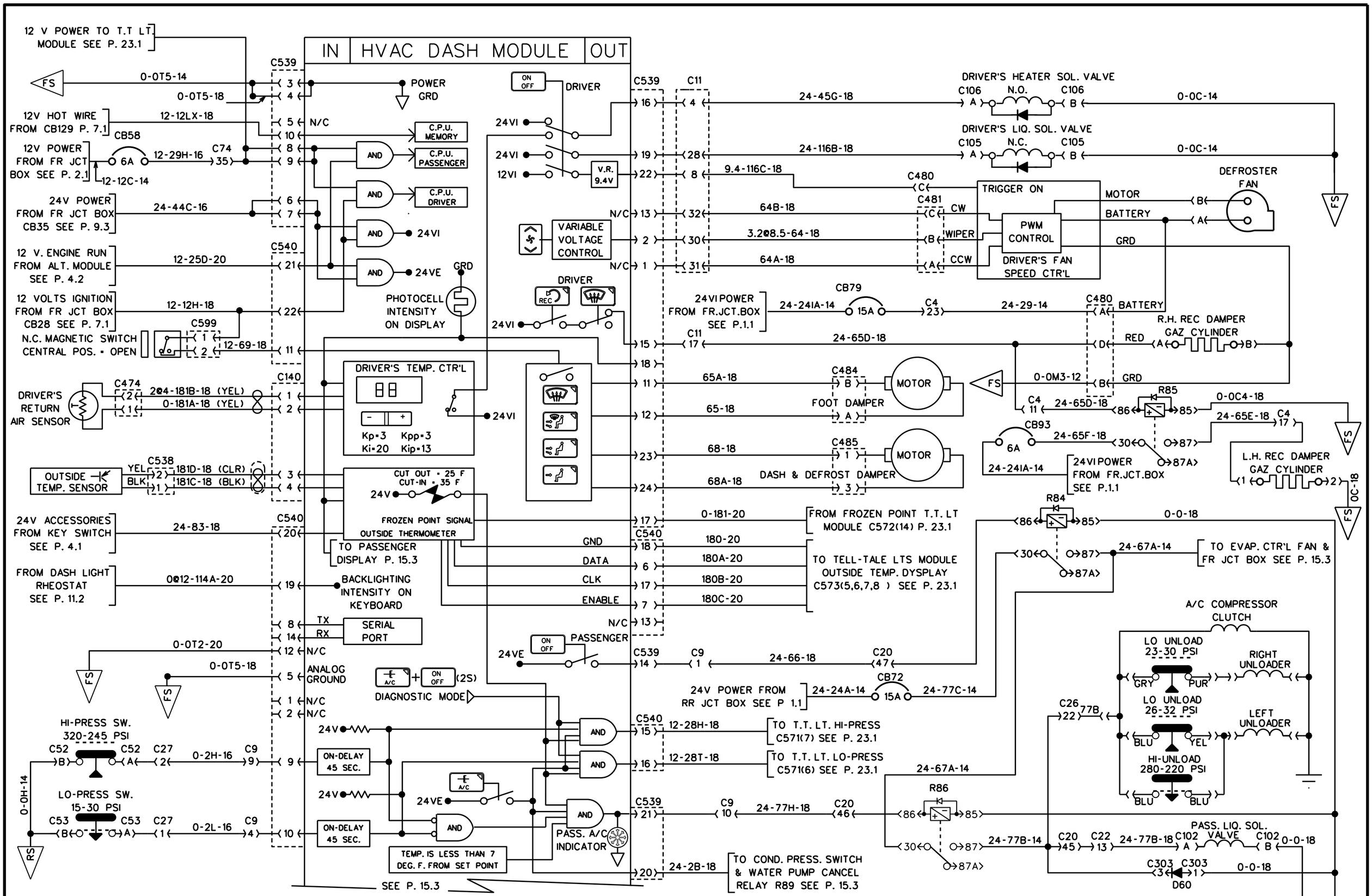

A/C AND HEAT SYSTEM

PREVOST	WIRING DIAGRAM	NO: D060993	PAGE: 15.2	REVISION 05

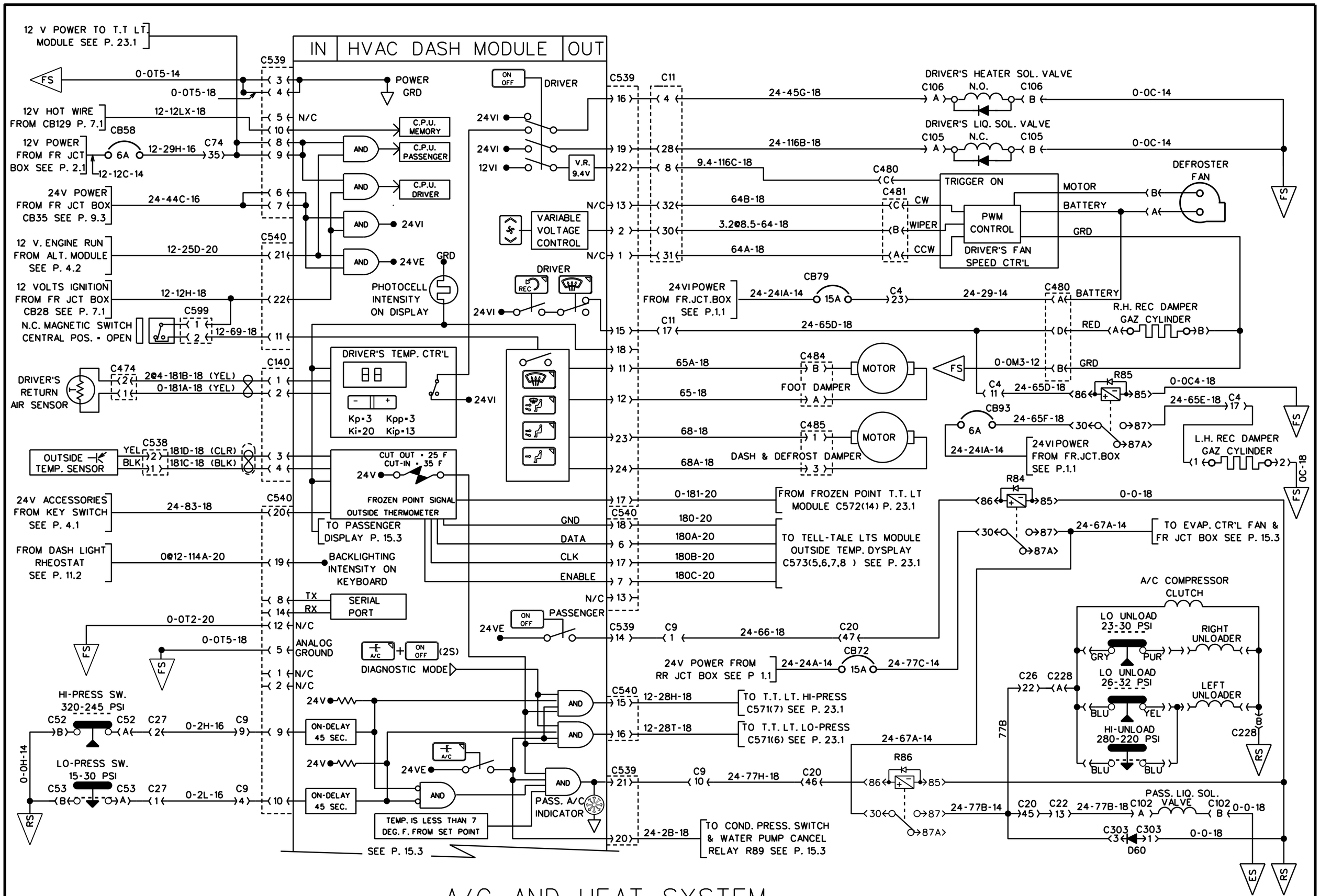

A/C AND HEAT SYSTEM

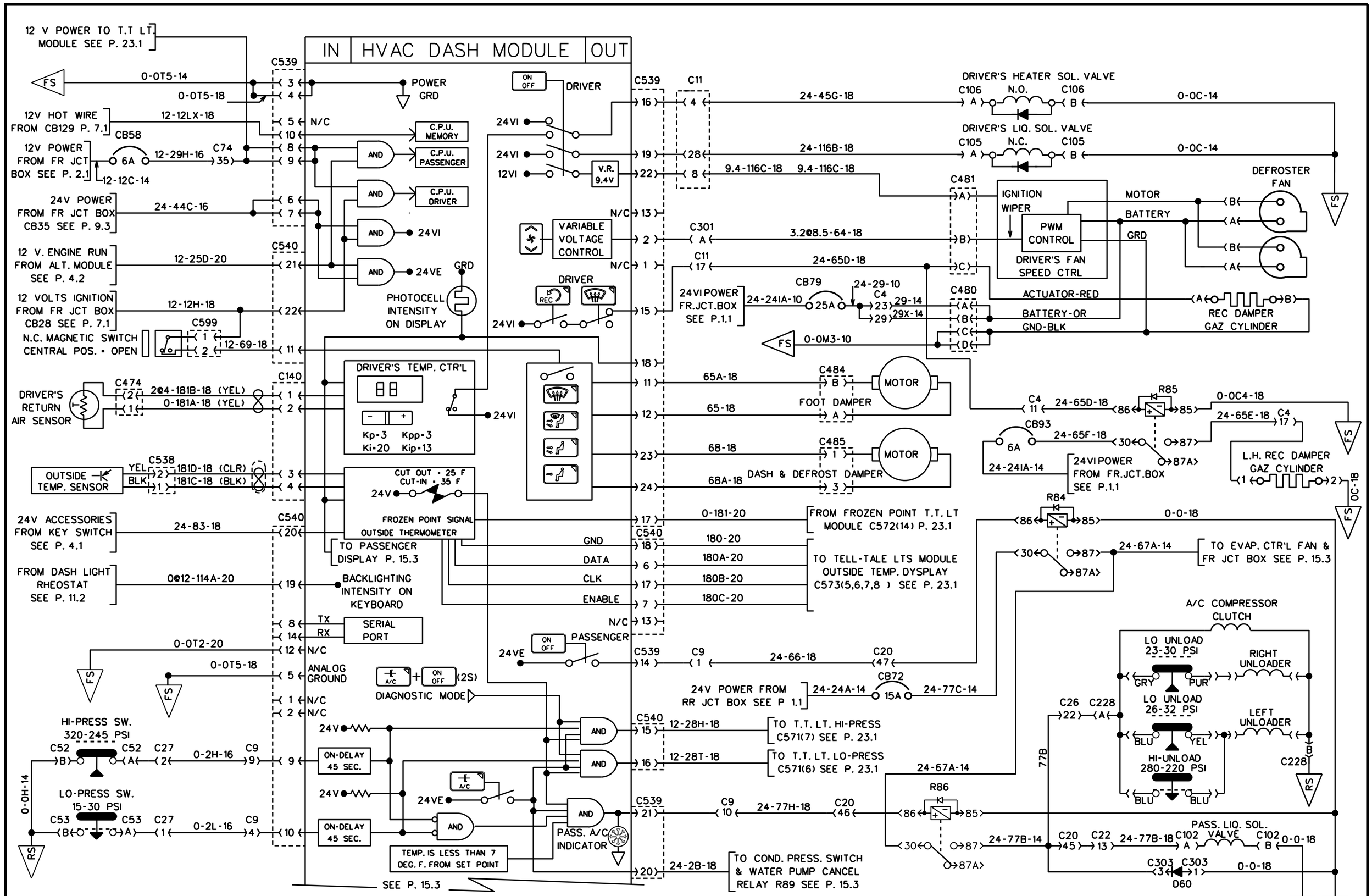

A/C AND HEAT SYSTEM

PREVOST	WIRING DIAGRAM	NO: D060993	PAGE: 15.2	REVISION 11

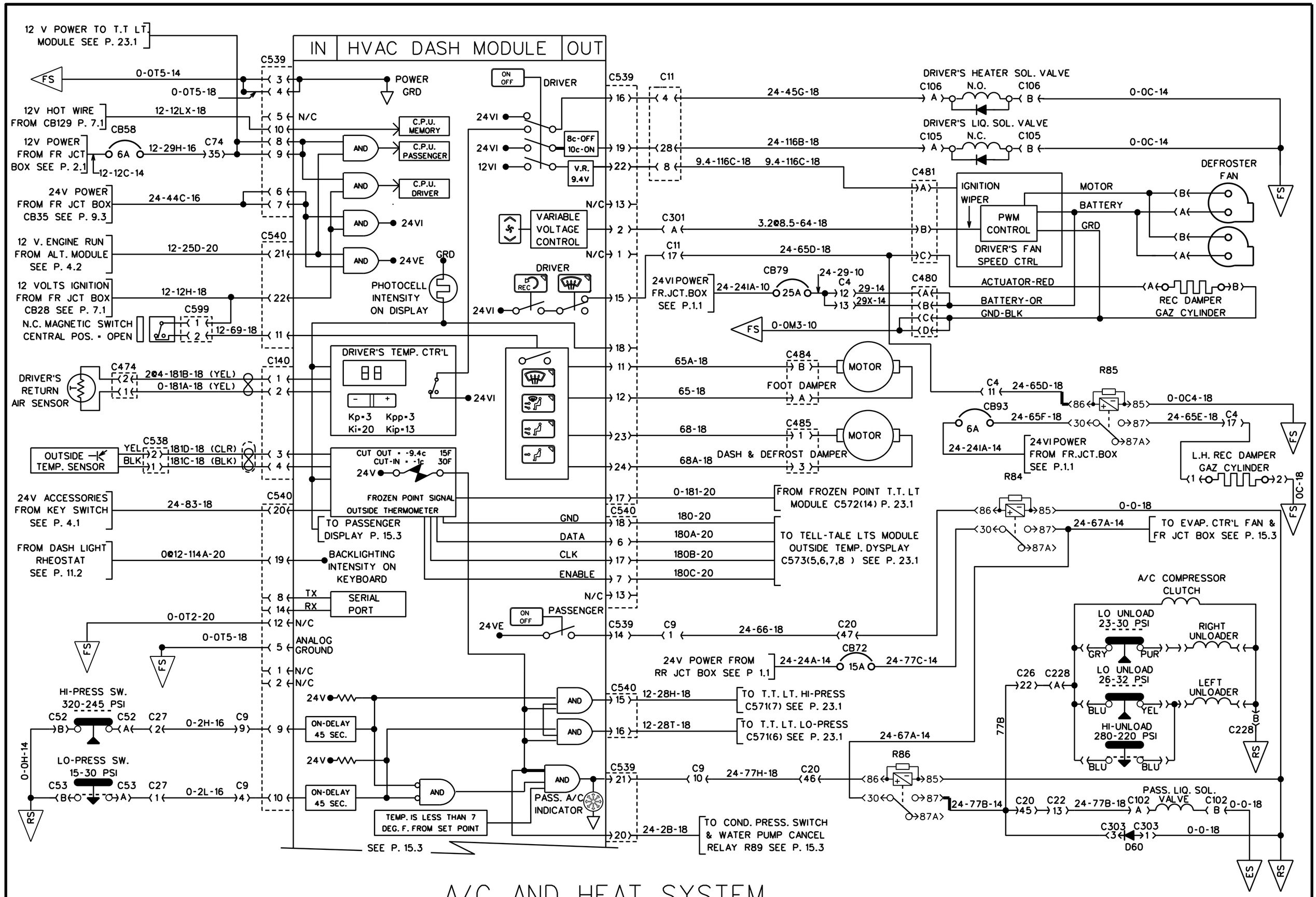

A/C AND HEAT SYSTEM

PREVOST	WIRING DIAGRAM	NO: D060993	PAGE: 15.2	REVISION 15

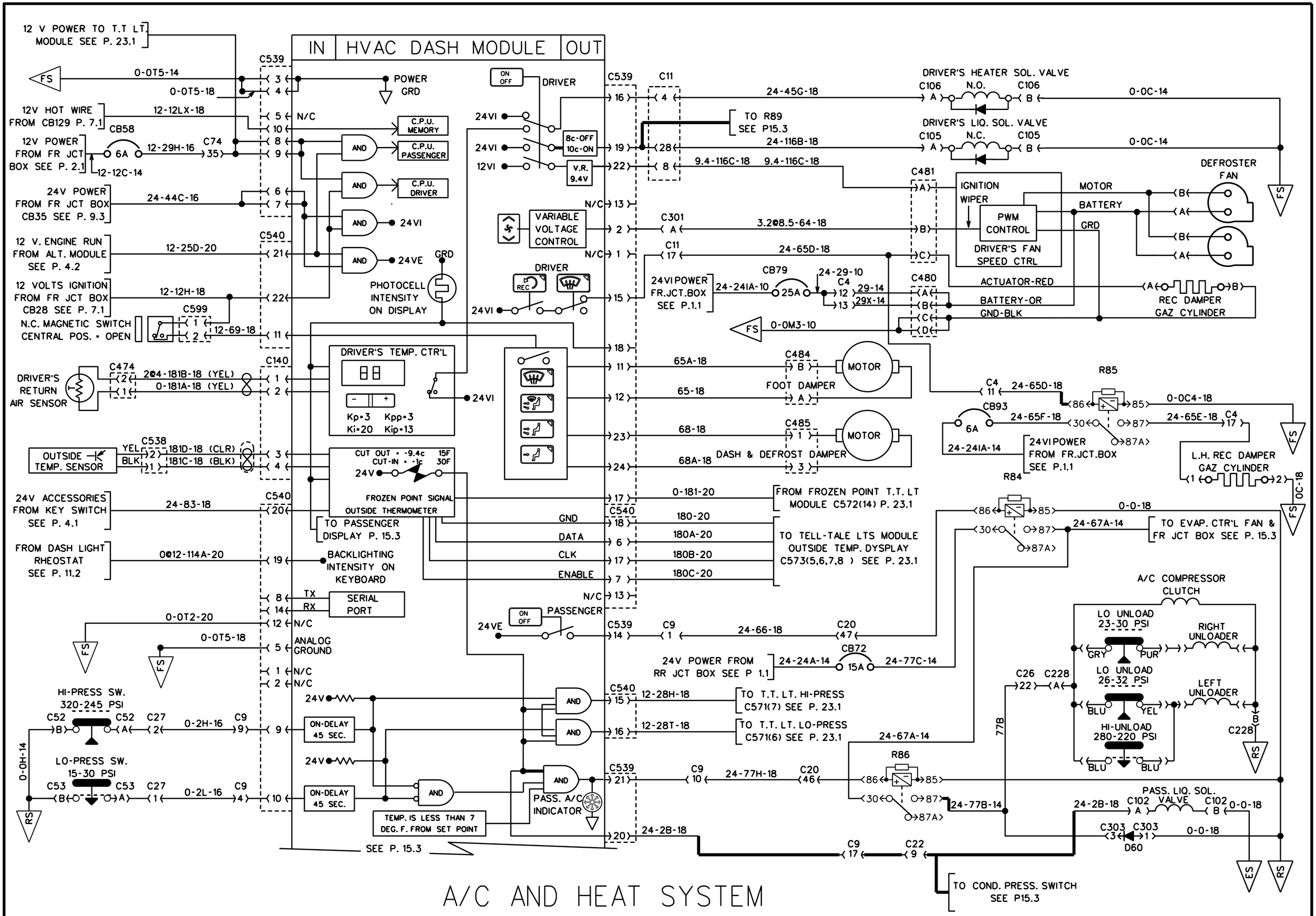

A/C AND HEAT SYSTEM

PREVOST	WIRING DIAGRAM	NO: D060993	PAGE: 15.2	REVISION 16

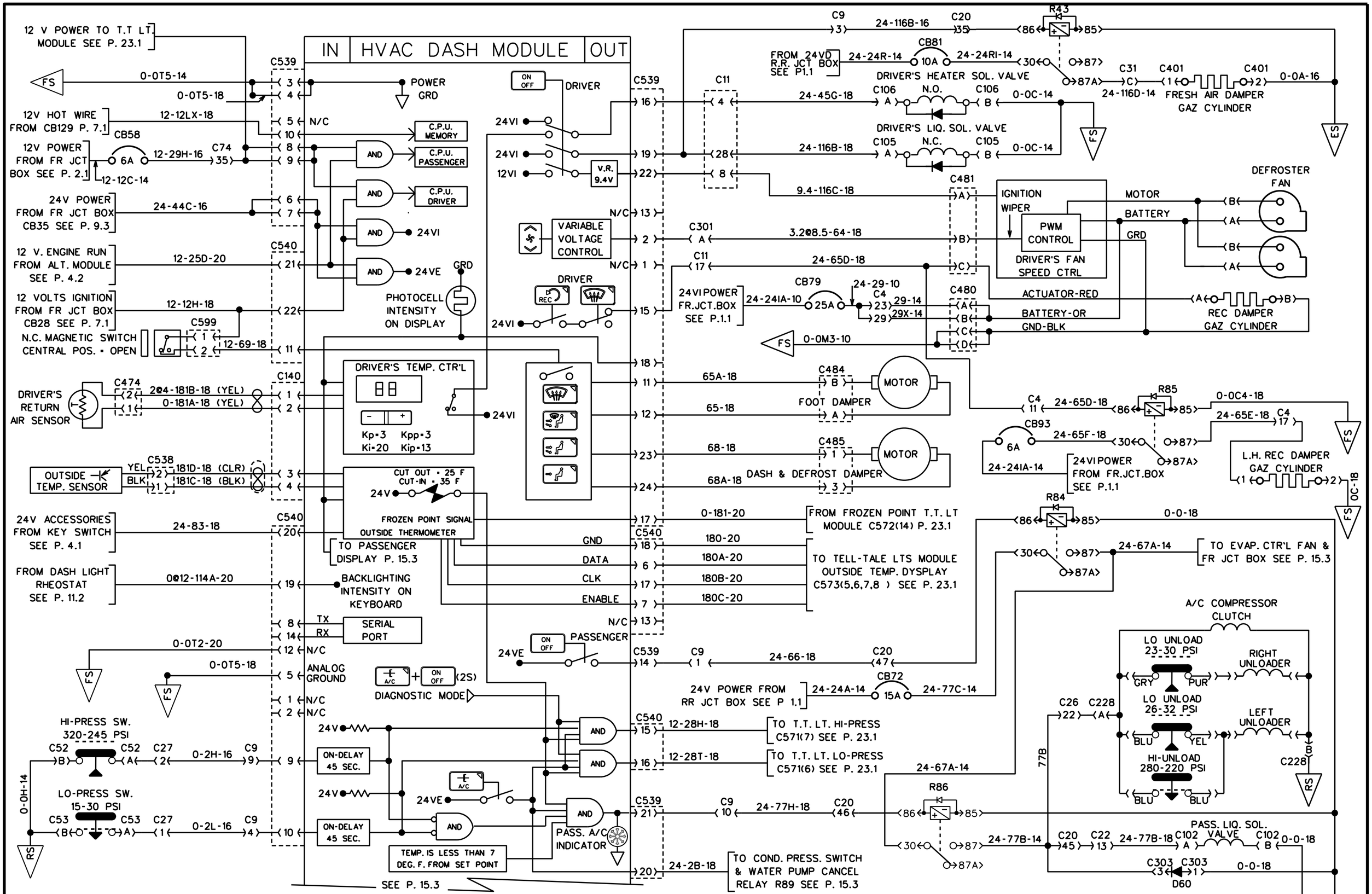

A/C AND HEAT SYSTEM

PREVOST	WIRING DIAGRAM	NO: D060993	PAGE: 15.2SP1	REVISION 11

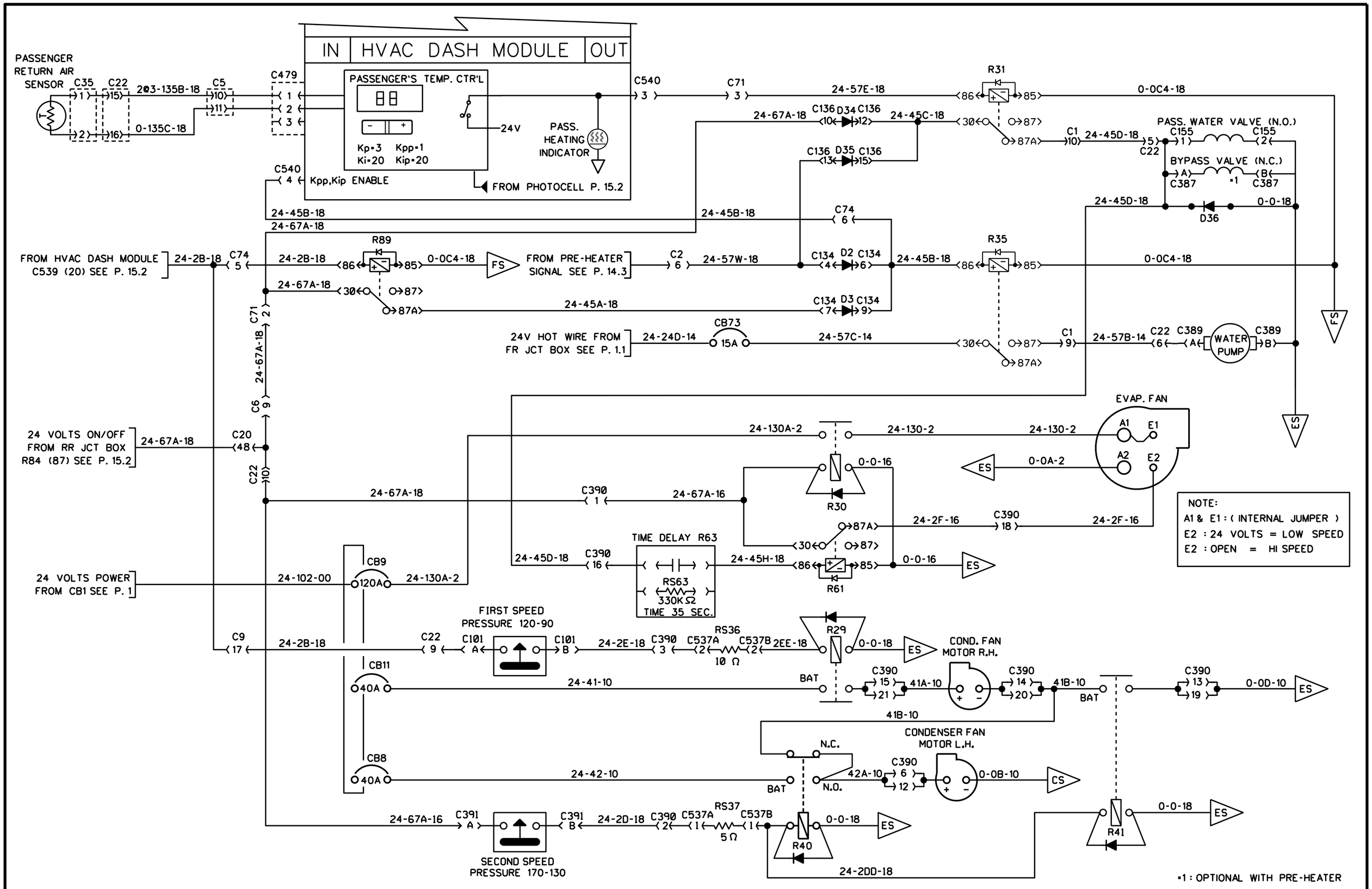

A/C AND HEAT SYSTEM

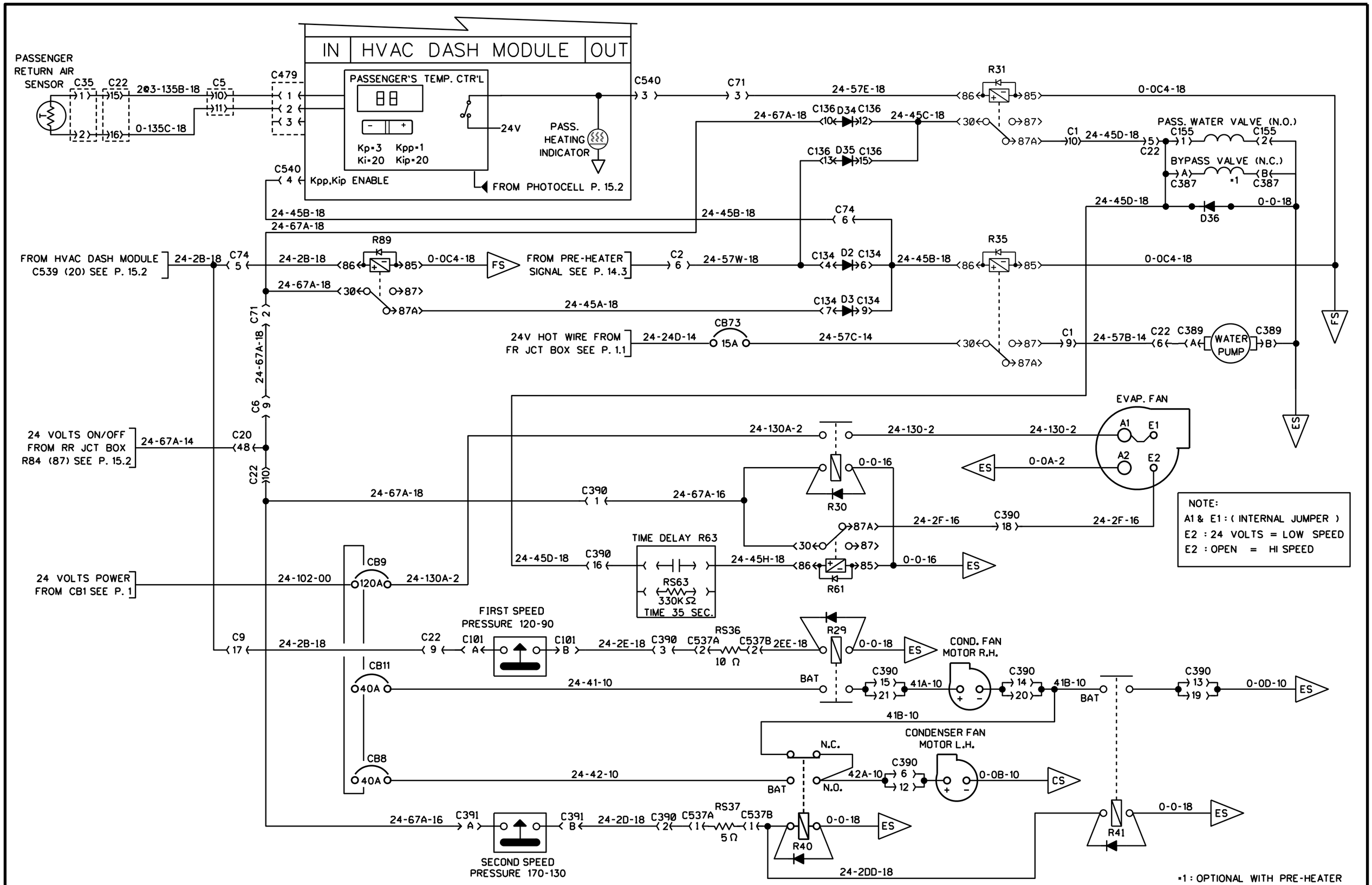

A/C AND HEAT SYSTEM

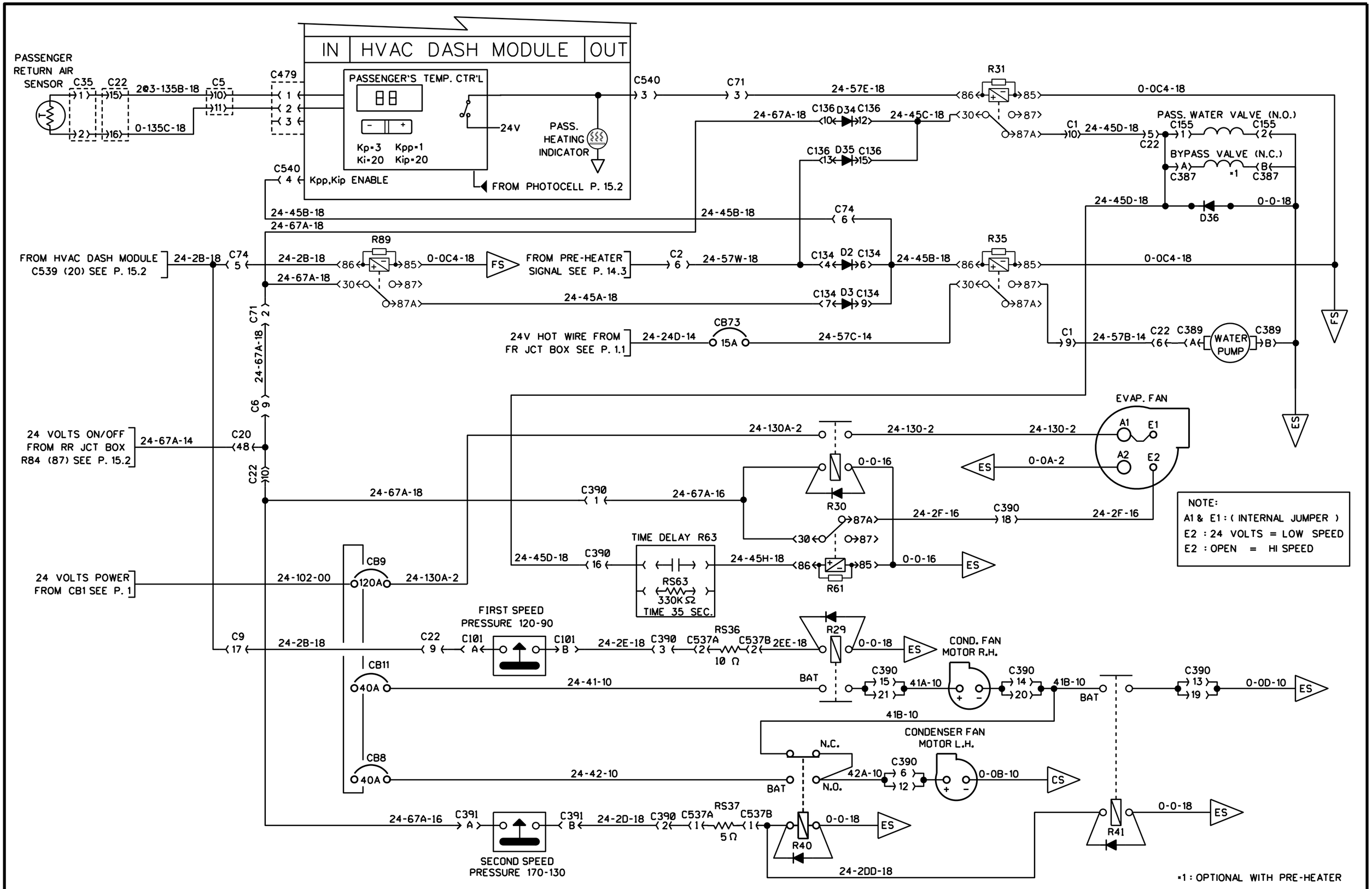

A/C AND HEAT SYSTEM

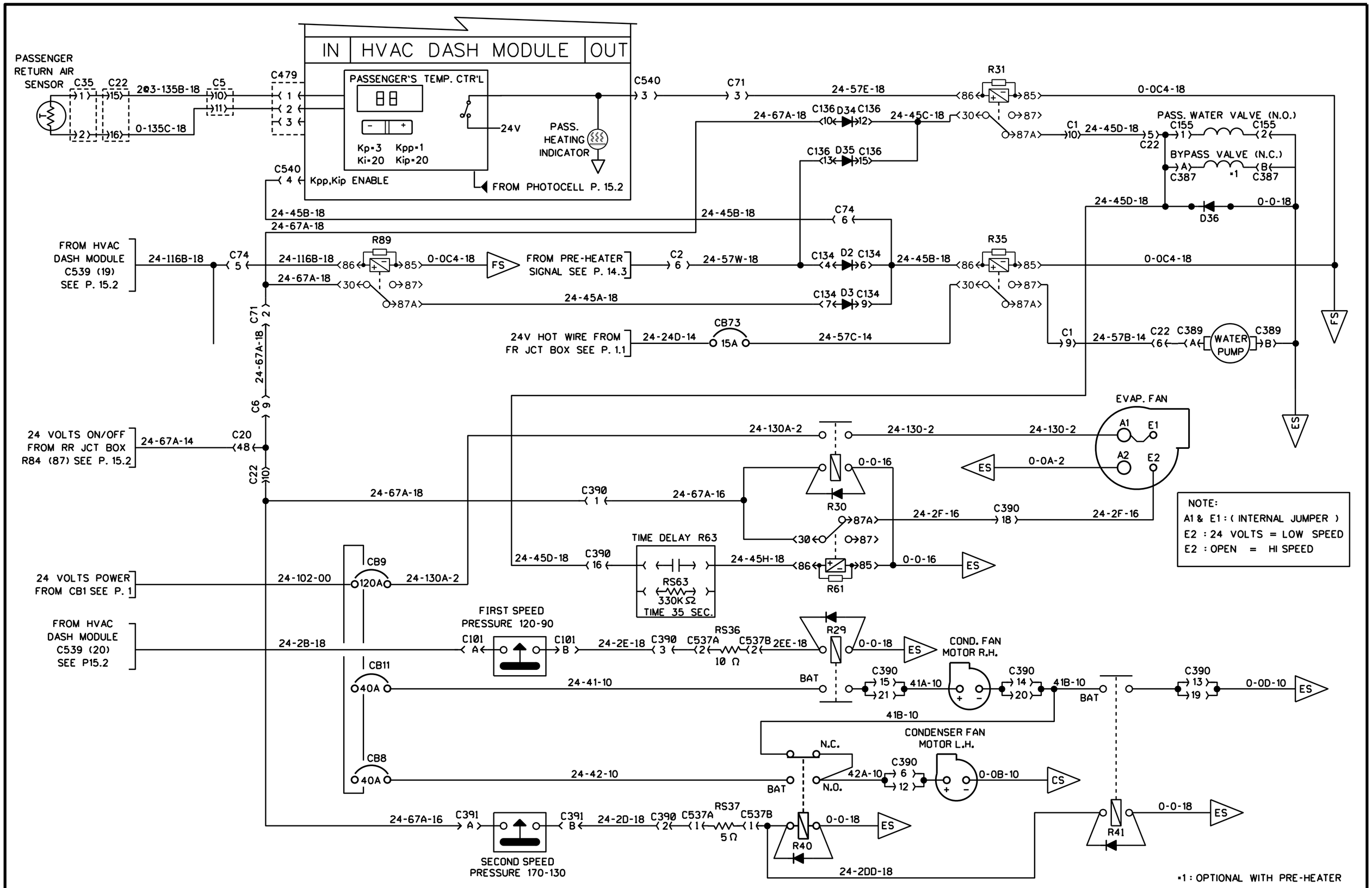

A/C AND HEAT SYSTEM

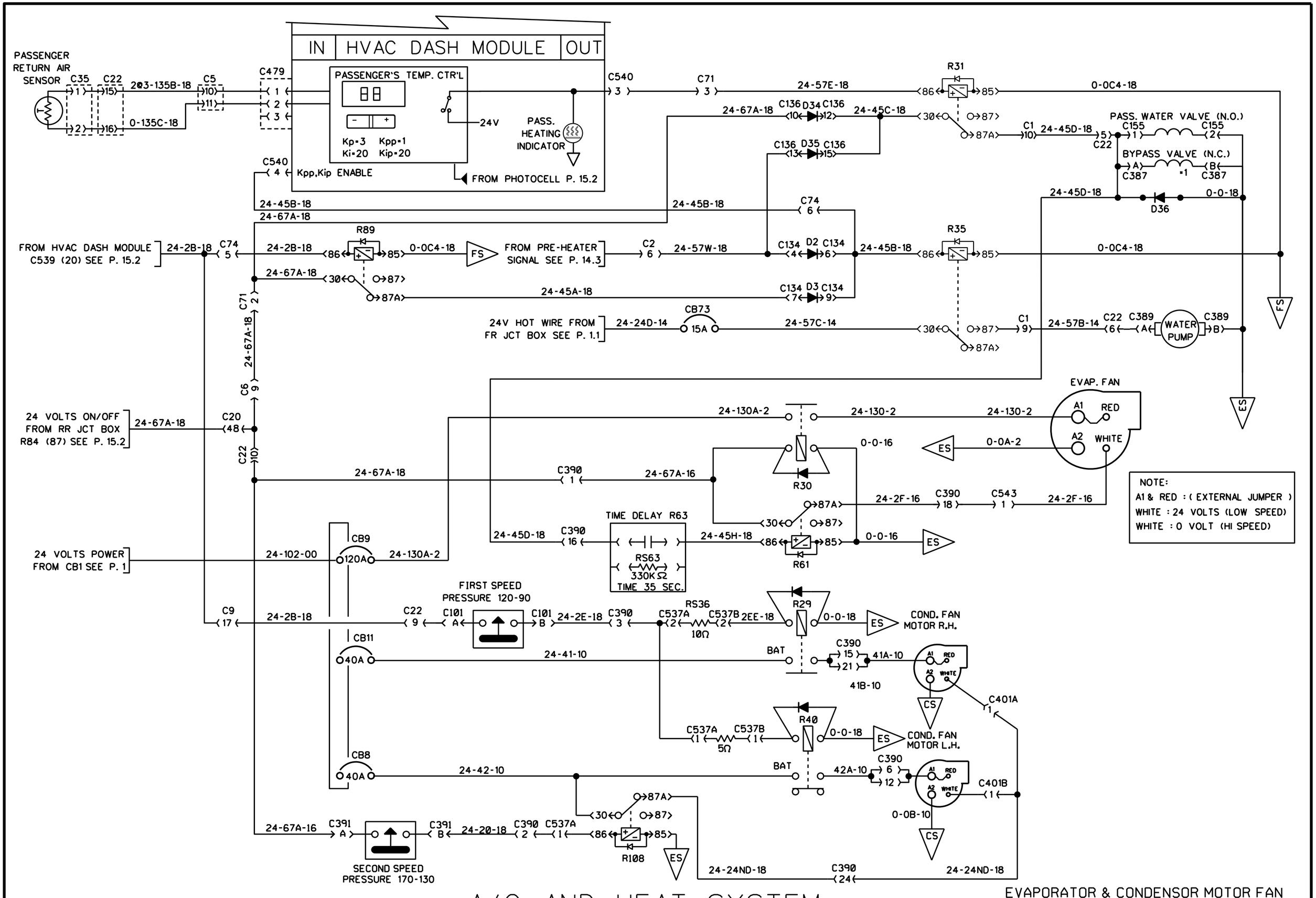

A/C AND HEAT SYSTEM

EVAPORATOR & CONDENSOR MOTOR FAN
AMETEC (BRUSHLESS)

PREVOST	WIRING DIAGRAM	NO: D060993	PAGE: 15.3sp1	REVISION 00

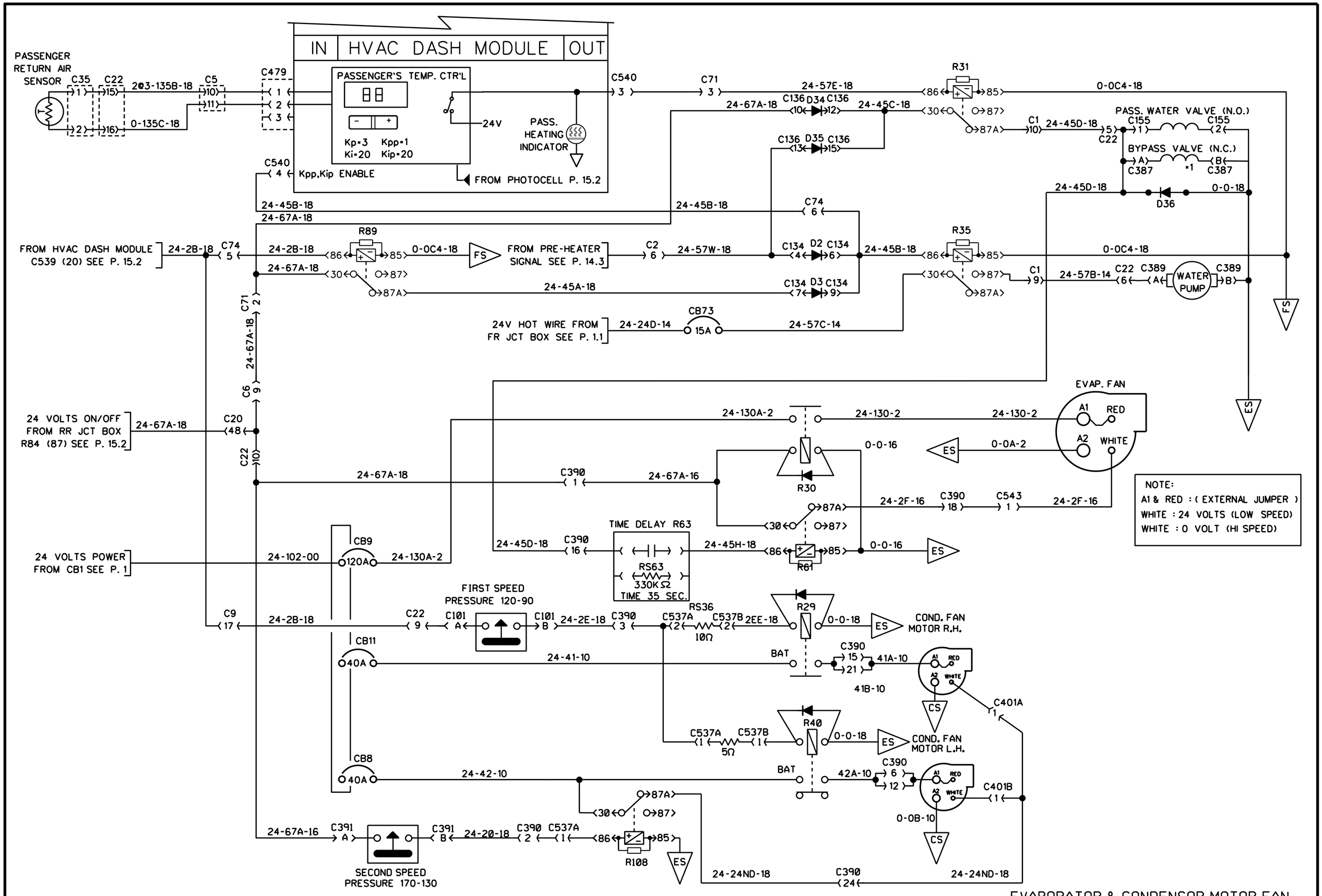

A/C AND HEAT SYSTEM

EVAPORATOR & CONDENSOR MOTOR FAN
AMETEC (BRUSHLESS)

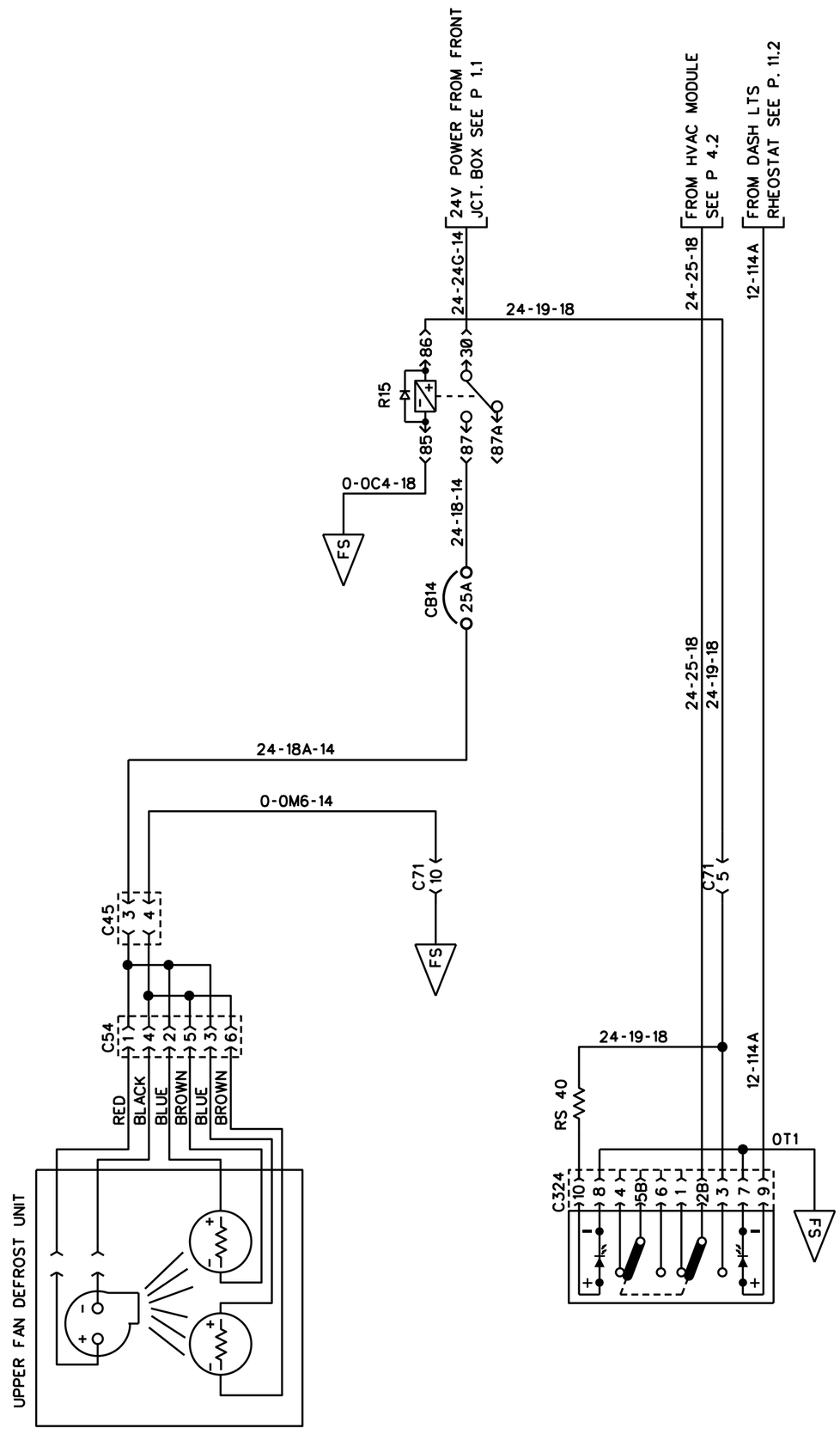

UPPER WINDSHIELD FAN DEFROST

PREVOST	WIRING DIAGRAM	NO: D060993	PAGE: 15.4	REVISION 00

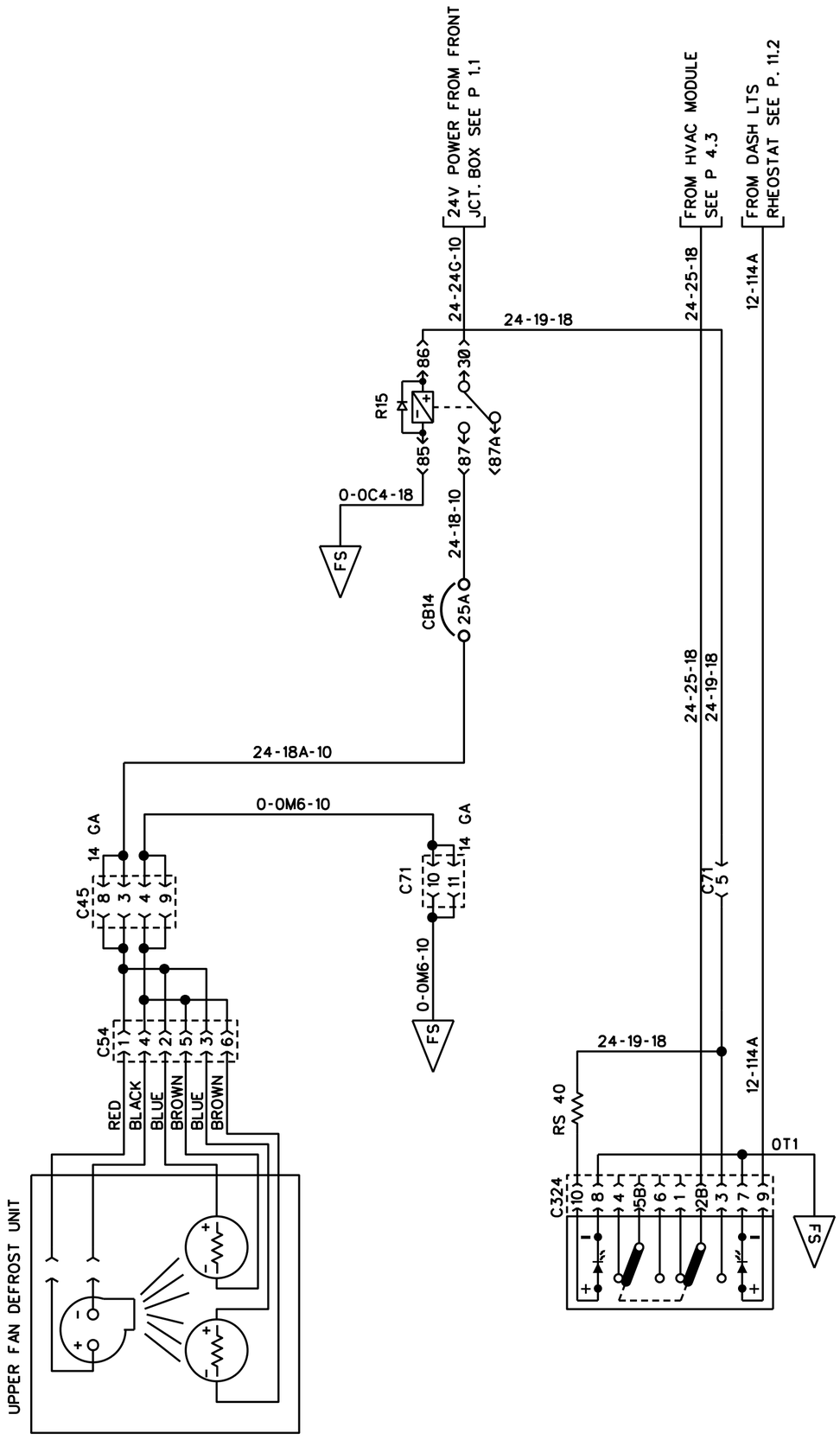

UPPER WINDSHIELD FAN DEFROST

PREVOST	WIRING DIAGRAM	NO: D060993	PAGE: 15.4	REVISION 02

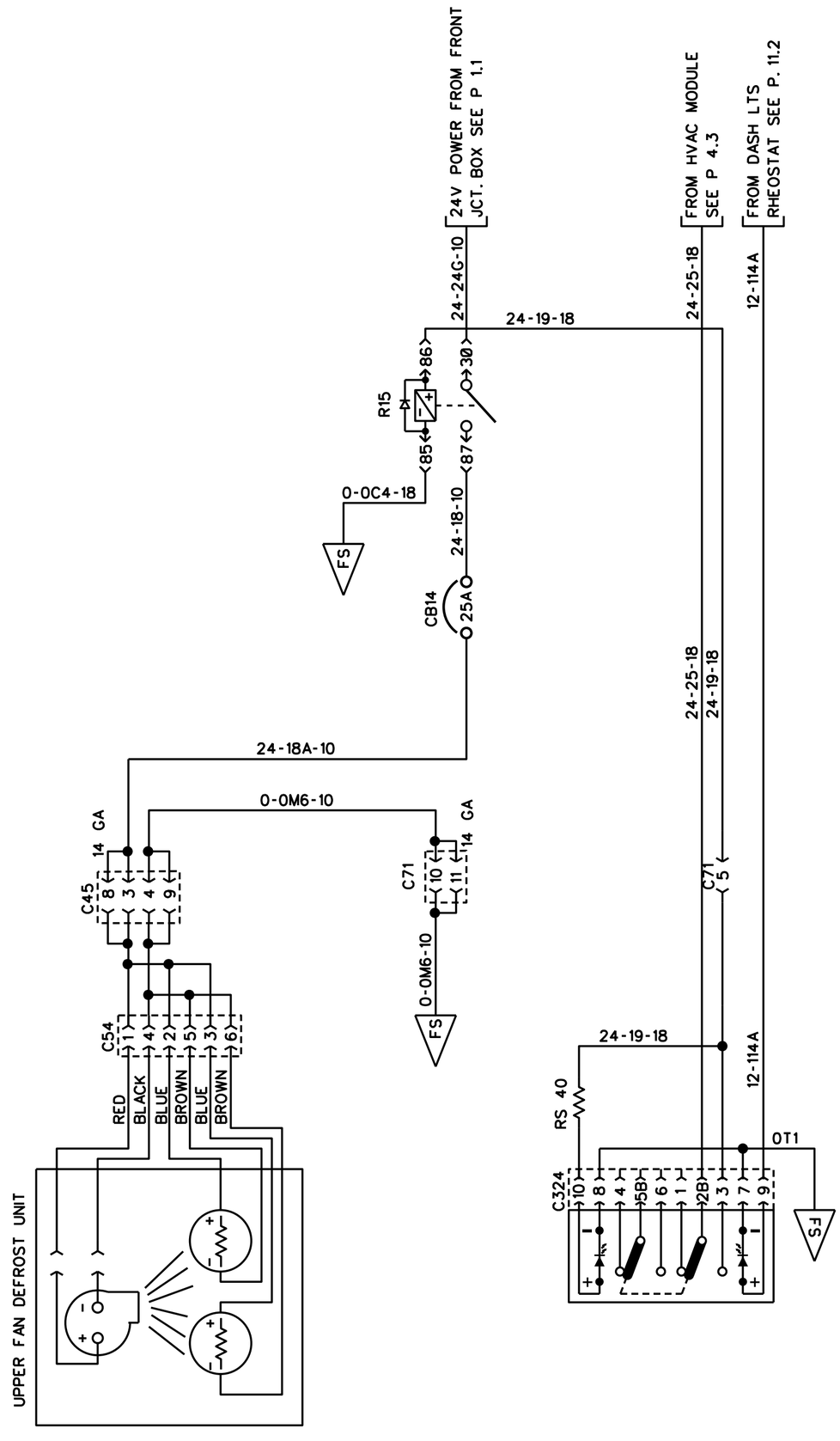

UPPER WINDSHIELD FAN DEFROST

PREVOST	WIRING DIAGRAM	NO: D060993	PAGE: 15.4	REVISION 09

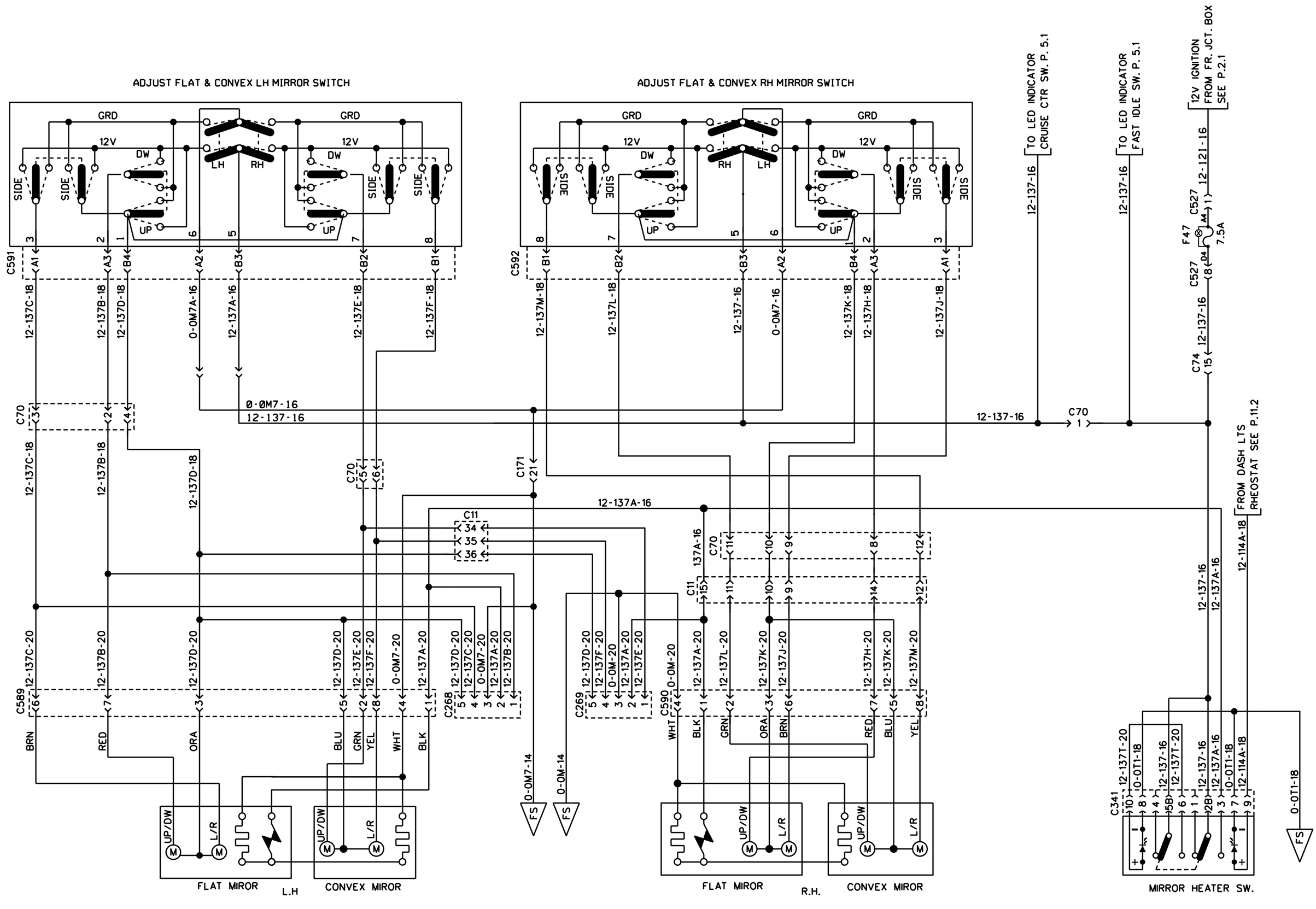

REAR VIEW MIRROR RAMCO FLAT & CONVEX - 2 ADJUSTMENT SW. & 1 HEATED SW.

PREVOST	WIRING DIAGRAM	NO: D060993	PAGE: 16.1	REVISION 00

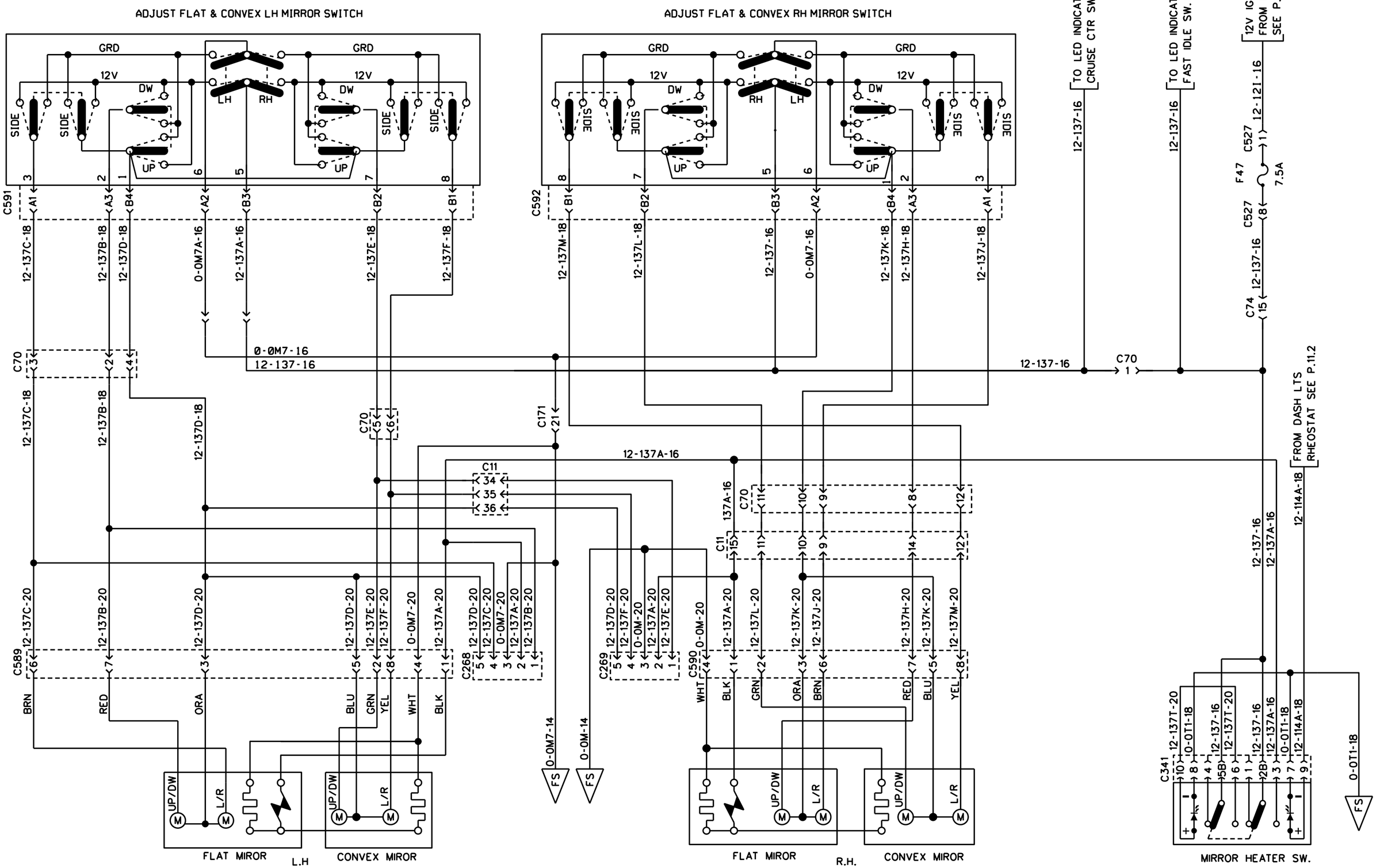

REAR VIEW MIRROR RAMCO FLAT & CONVEX - 2 ADJUSTMENT SW. & 1 HEATED SW.

PREVOST	WIRING DIAGRAM	NO: D060993	PAGE: 16.1	REVISION 05

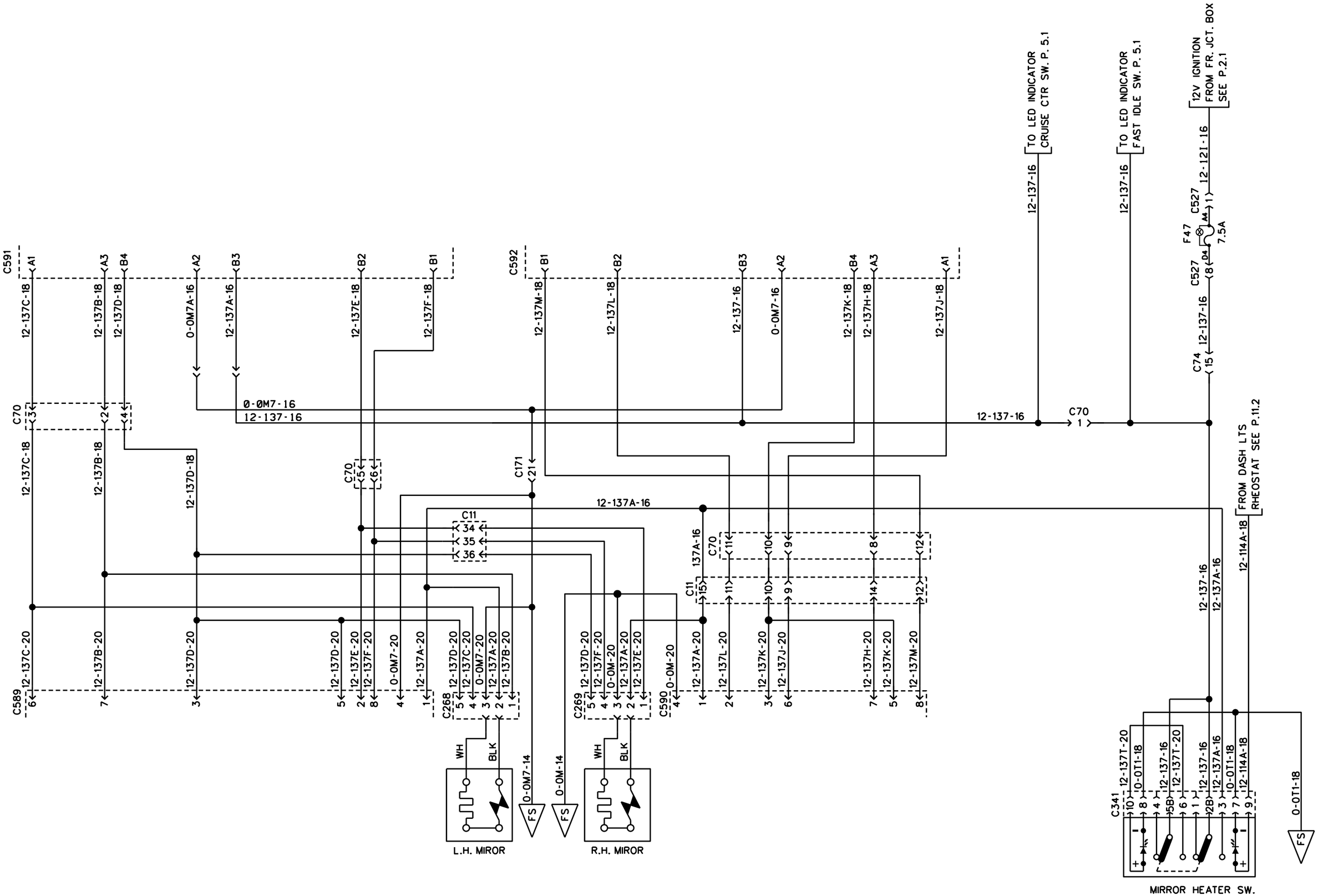

REAR VIEW MIRROR RAMCO ELECTRICAL HEATING ONLY

PREVOST	WIRING DIAGRAM	NO: D060993	PAGE: 16.2	REVISION 00

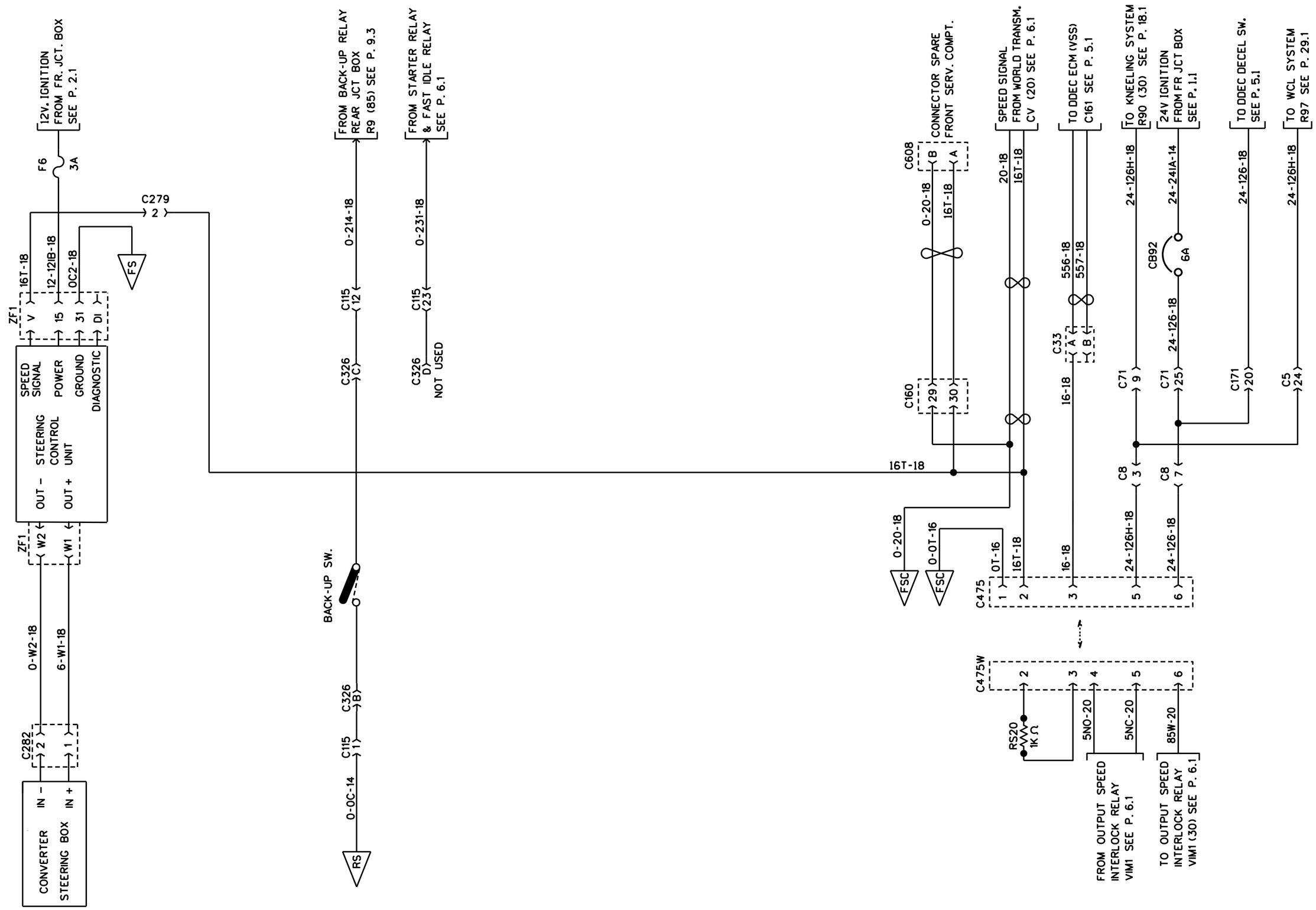

STEERING CONTROL

STD TRANSMISSION SPEED SIGNAL

PREVOST	WIRING DIAGRAM	NO: D060993	PAGE: 17.1	REVISION 00

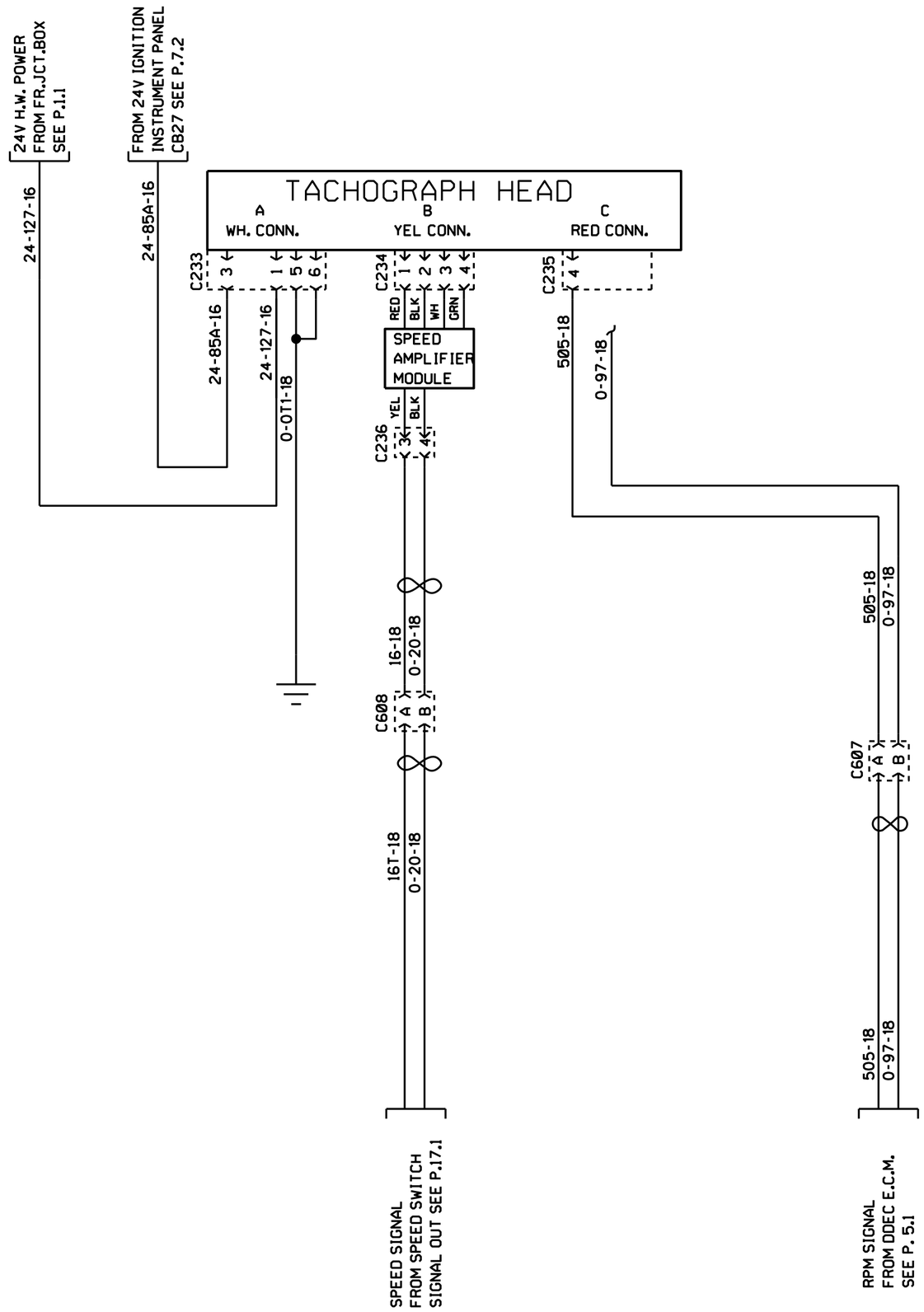

ELECTRONIC TACHOGRAPH

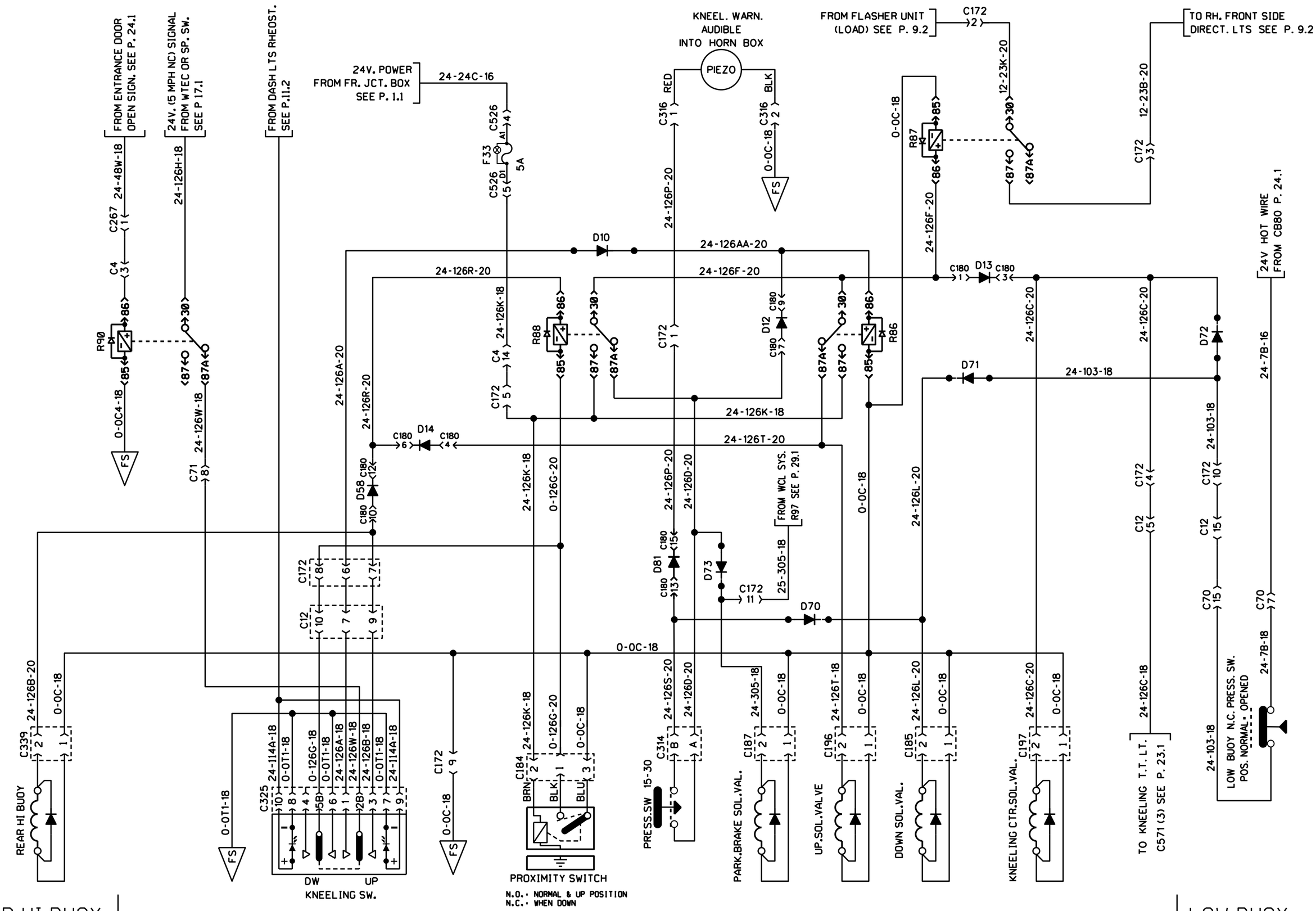

PREVOST	WIRING DIAGRAM	NO: D060993	PAGE: 18.1	REVISION 00

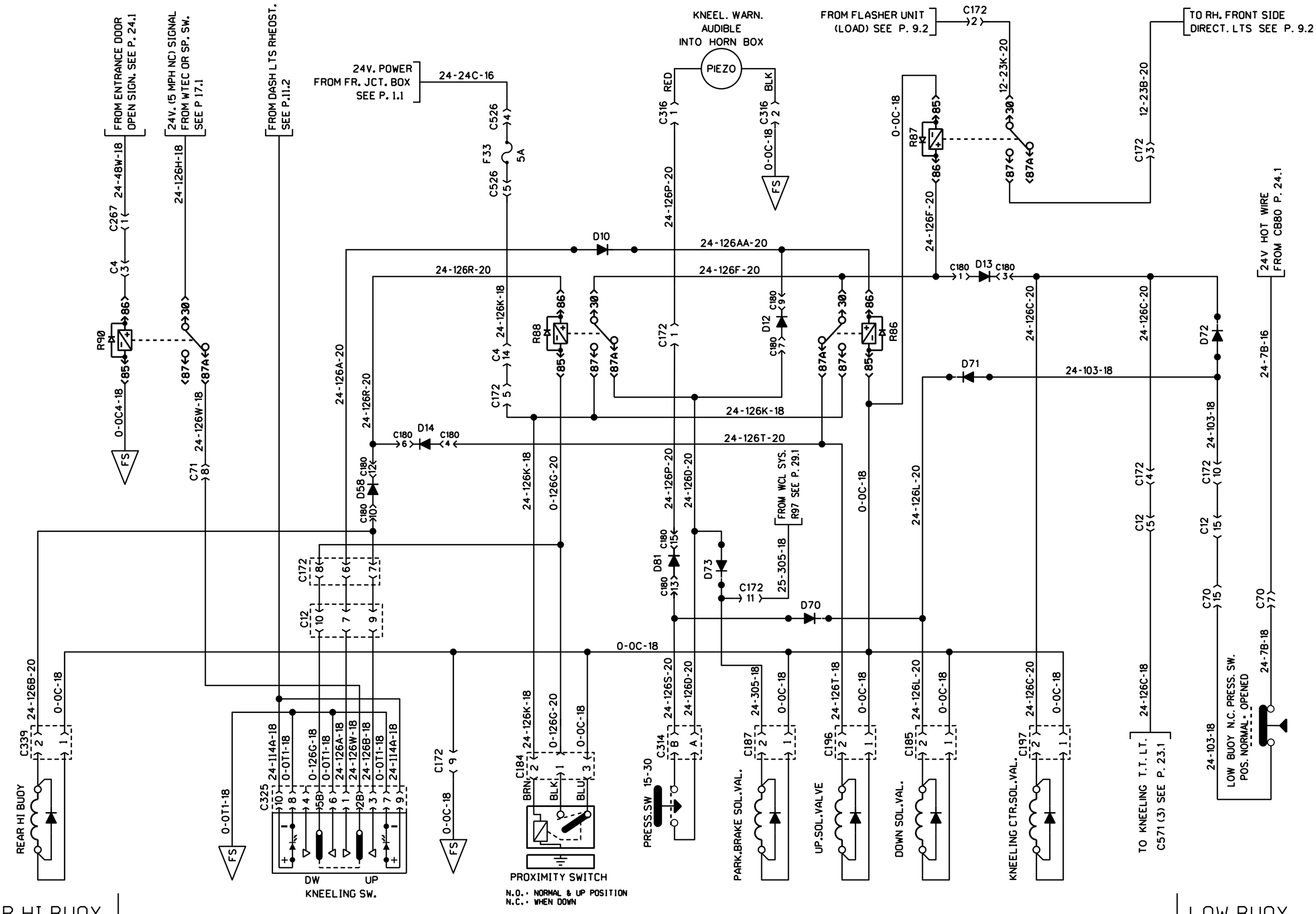

PREVOST	WIRING DIAGRAM	NO: D060993	PAGE: 18.1	REVISION 05

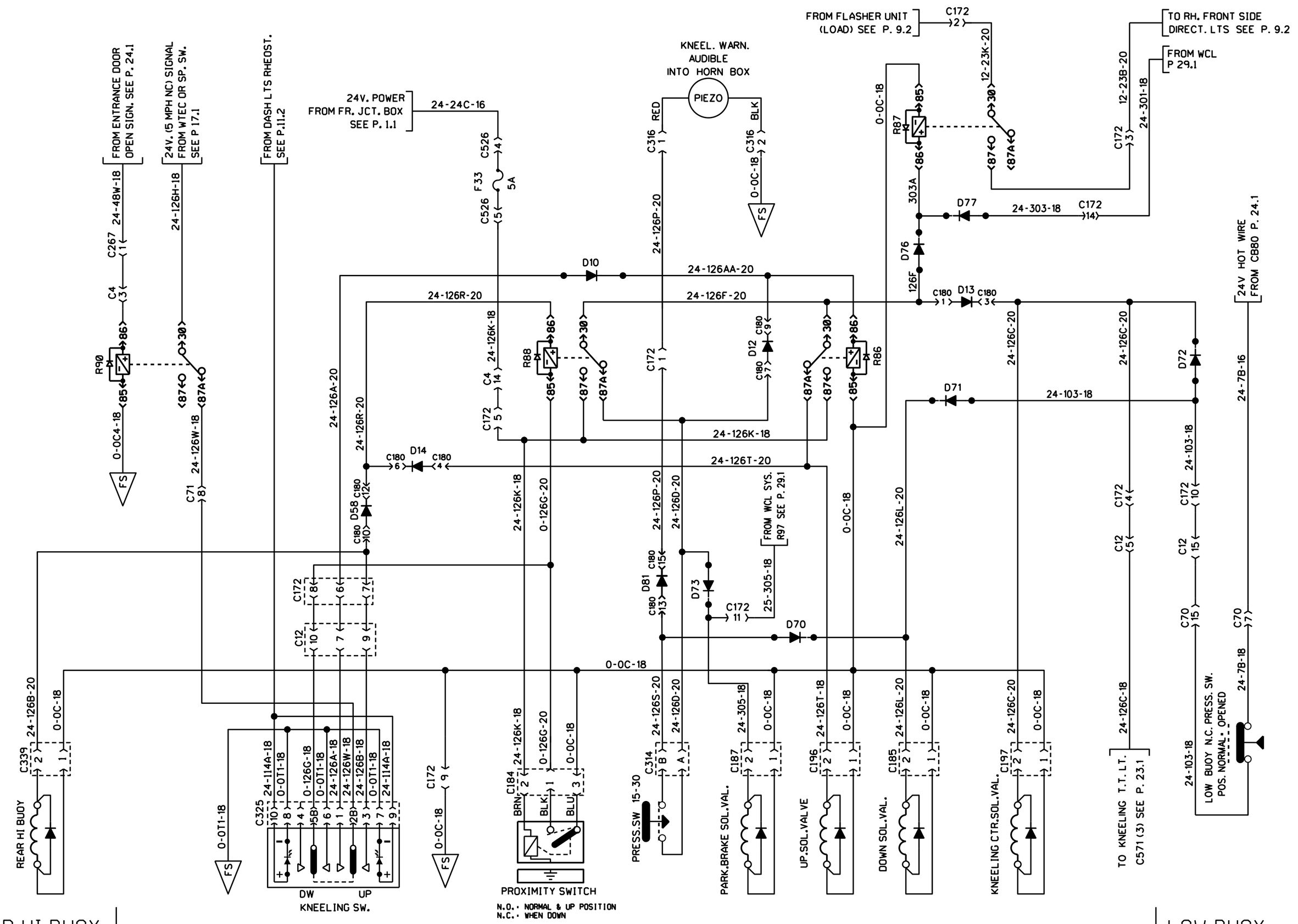

PREVOST	WIRING DIAGRAM	NO: D060993	PAGE: 18.1	REVISION 08

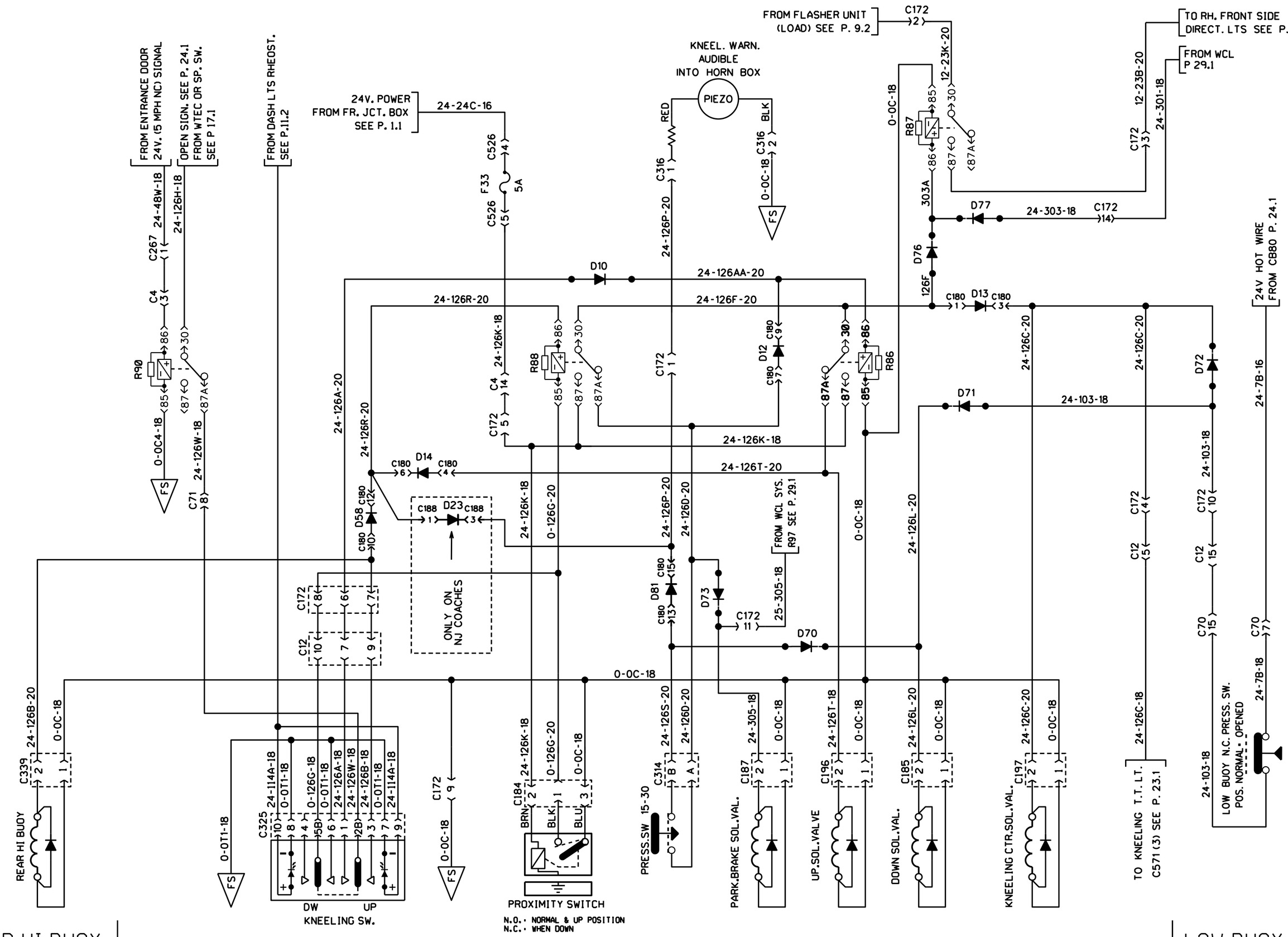

PREVOST	WIRING DIAGRAM	NO: D060993	PAGE: 18.1	REVISION 15

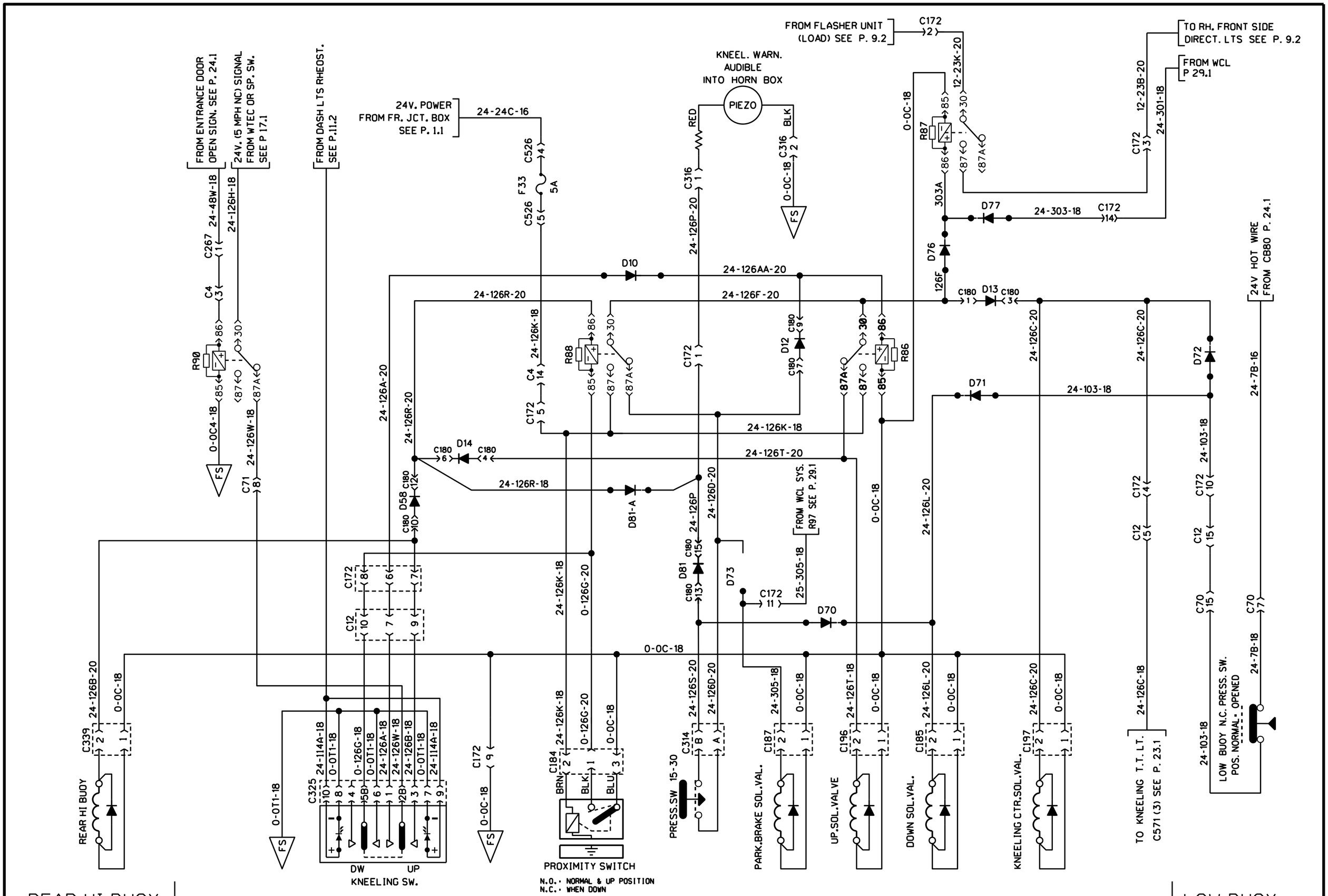

PREVOST	WIRING DIAGRAM	NO: D060993	PAGE: 18.1SP1	REVISION 15

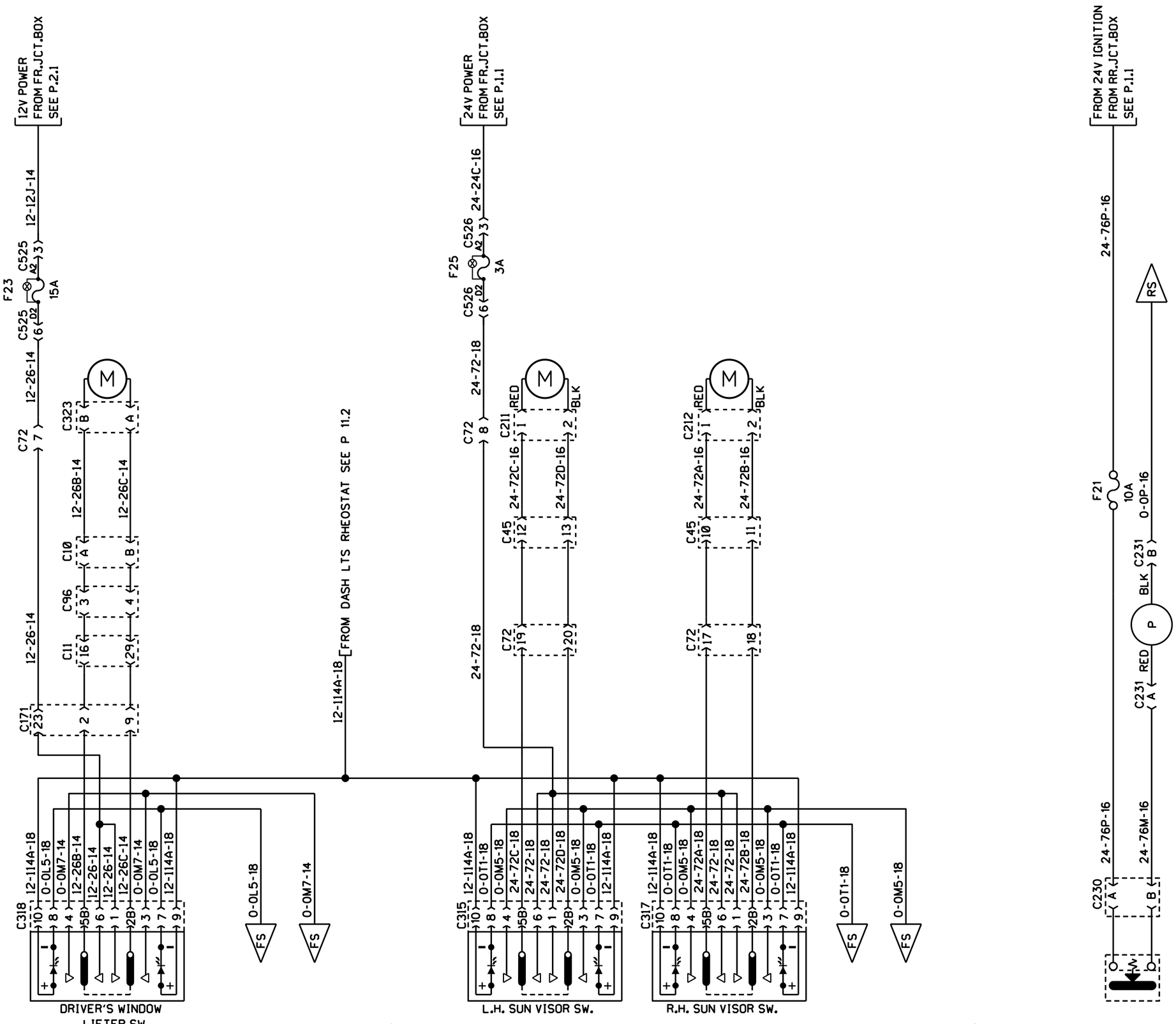

ENTRANCE DOOR AND DRIVER'S WINDOW LIFTER | SUN VISOR | FUEL PRIME PUMP

PREVOST	WIRING DIAGRAM	NO: D060993	PAGE: 19.1	REVISION 00

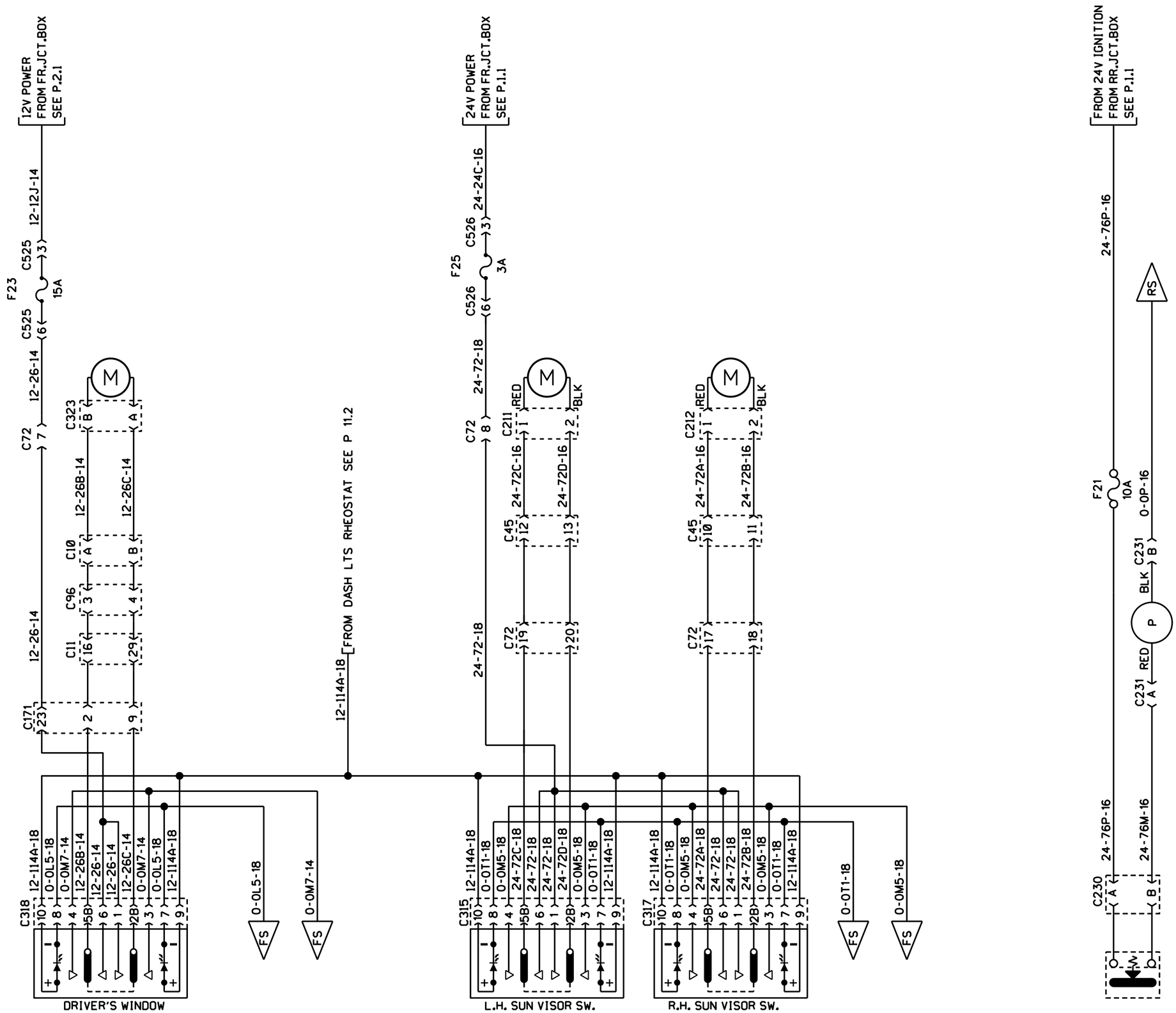

ENTRANCE DOOR AND DRIVER'S WINDOW LIFTER | SUN VISOR | FUEL PRIME PUMP

PREVOST	WIRING DIAGRAM	NO: D060993	PAGE: 19.1	REVISION 05

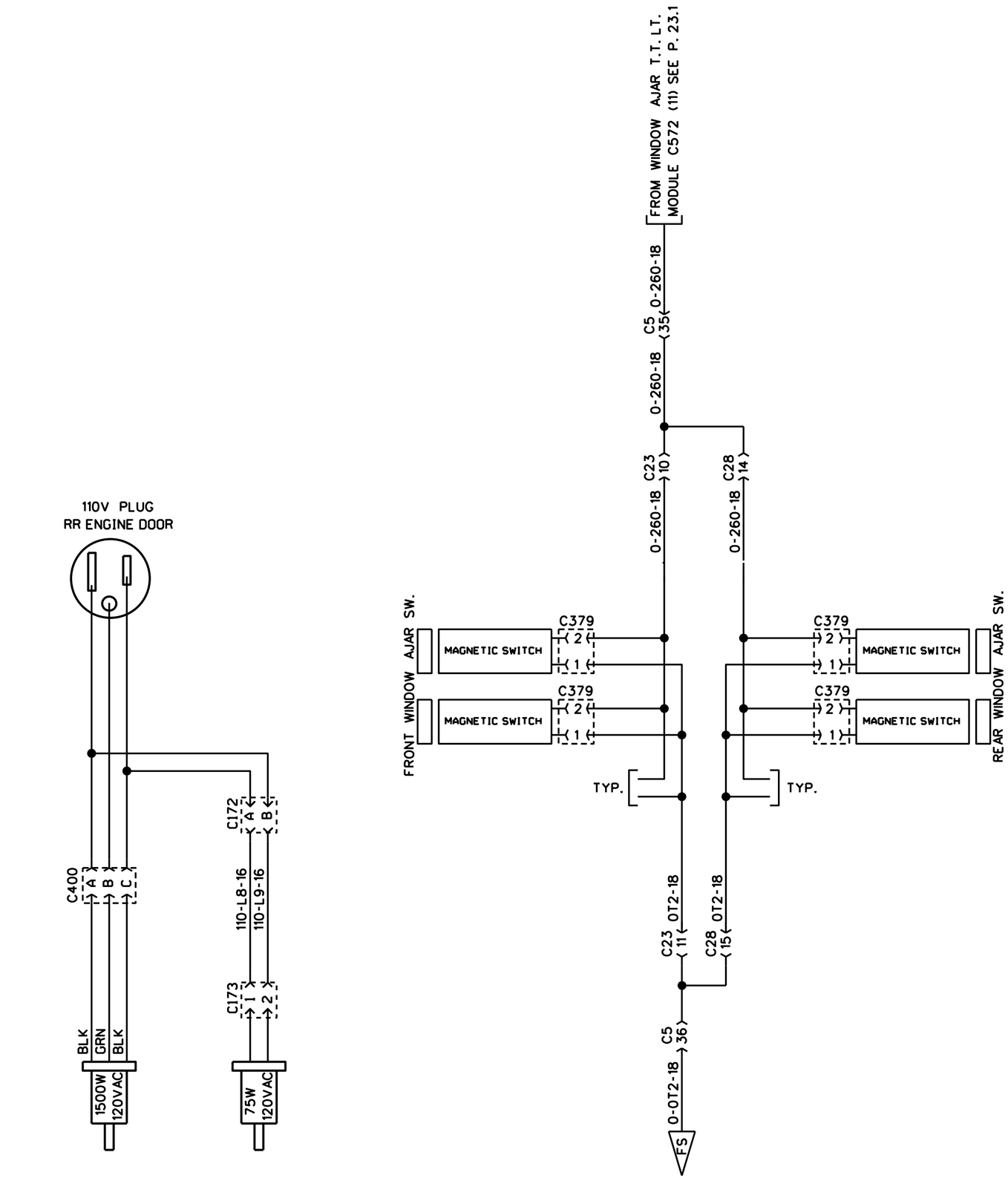

PREVOST	WIRING DIAGRAM	NO: D060993	PAGE: 20.1	REVISION 00

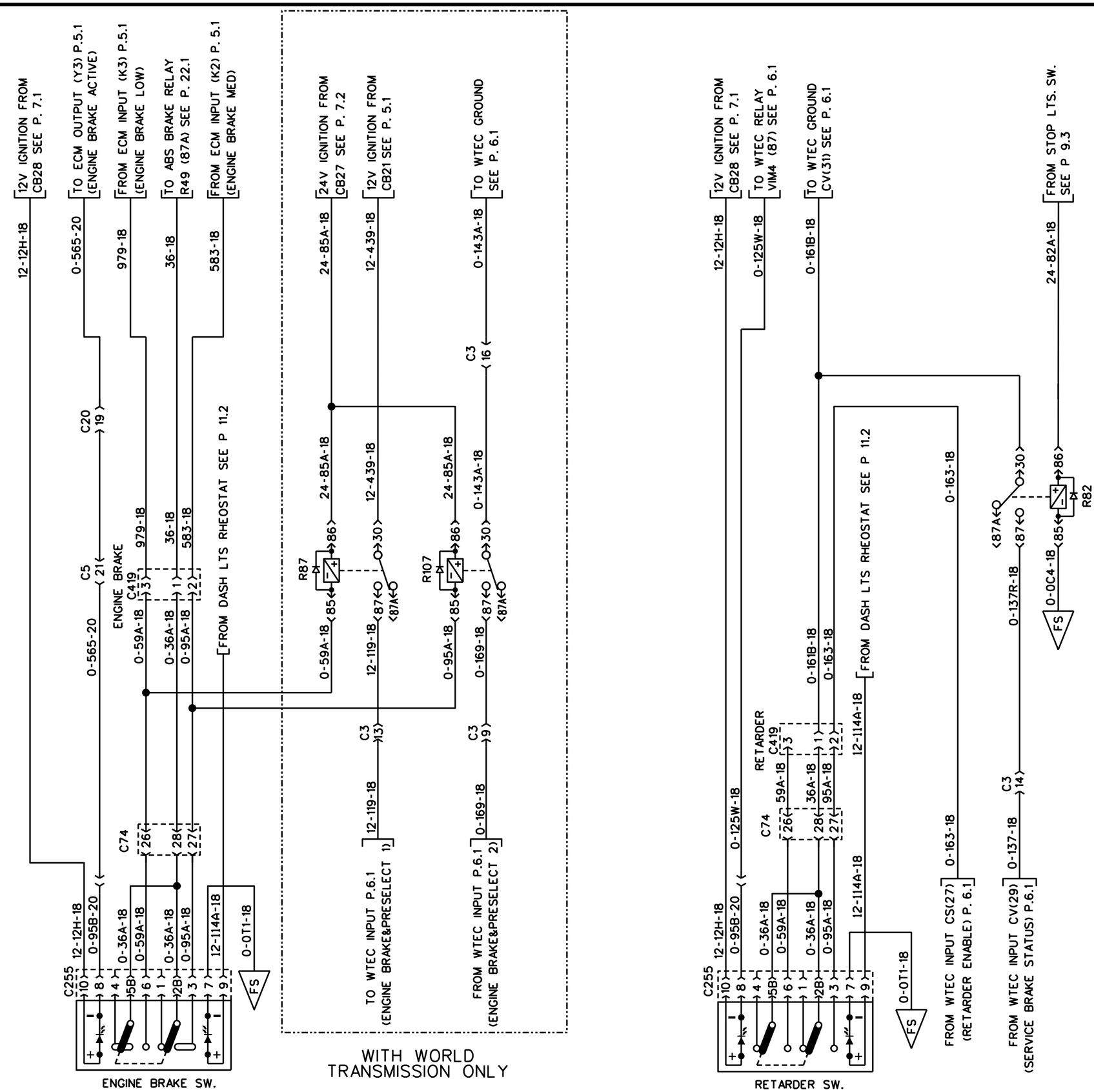

ENGINE BRAKE SYSTEM

RETARDER SYSTEM
(WORLD TRANSMISSION)

PREVOST	WIRING DIAGRAM	NO: D060993	PAGE: 21.1	REVISION 00

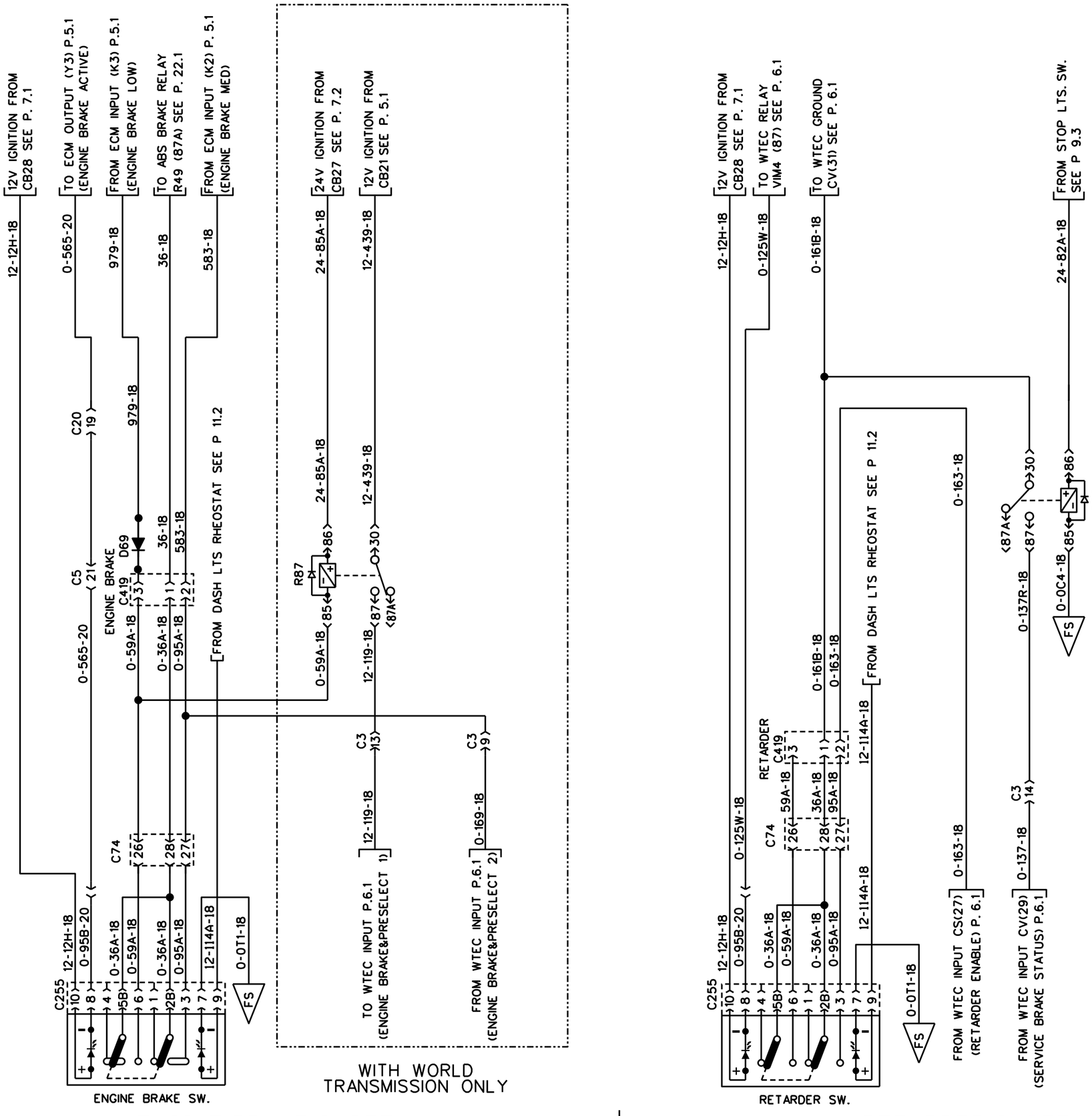

ENGINE BRAKE SYSTEM

RETARDER SYSTEM
(WORLD TRANSMISSION)

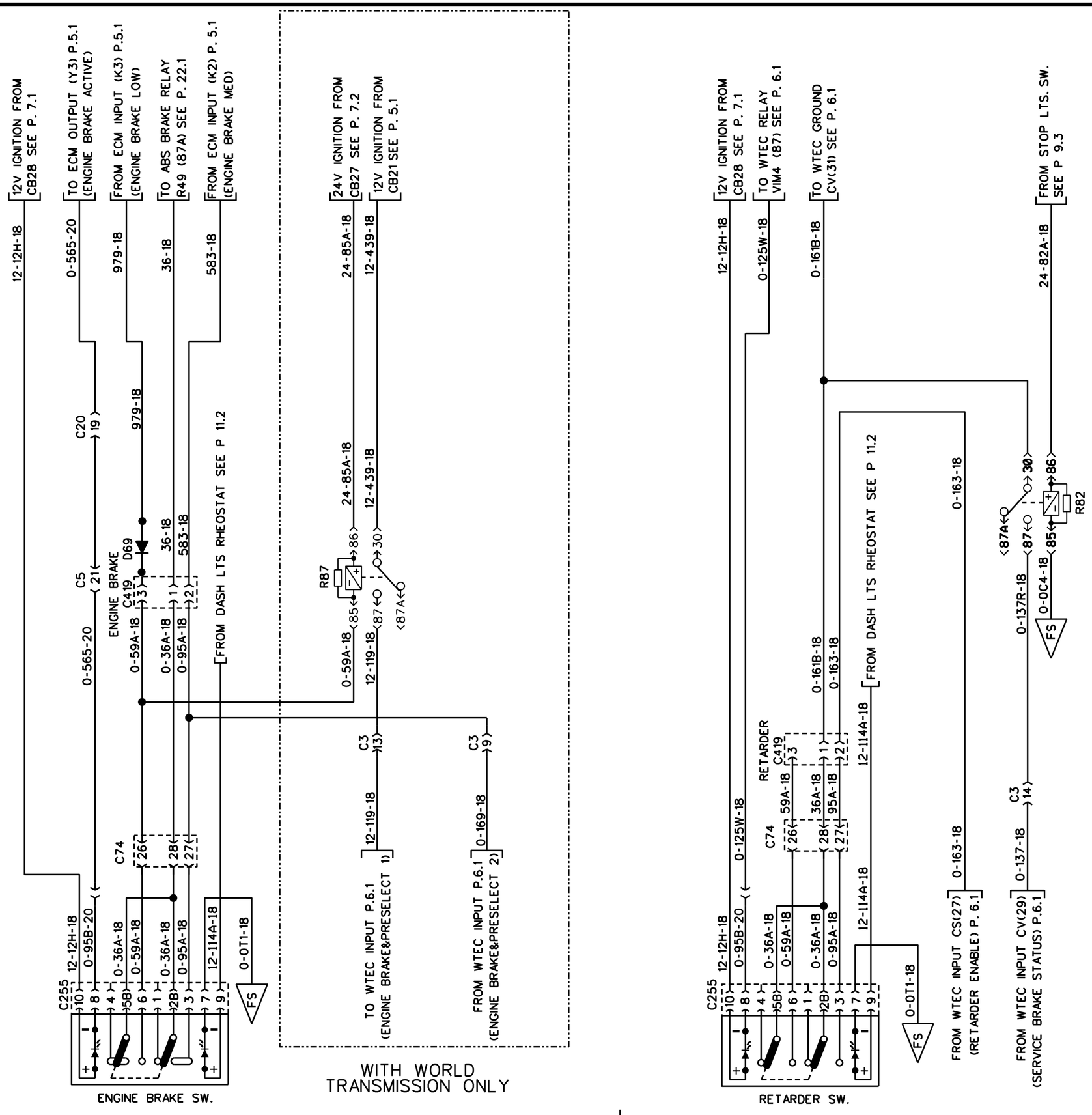

ENGINE BRAKE SYSTEM

RETARDER SYSTEM
(WORLD TRANSMISSION)

PREVOST	WIRING DIAGRAM	NO: D060993	PAGE: 21.1	REVISION 15

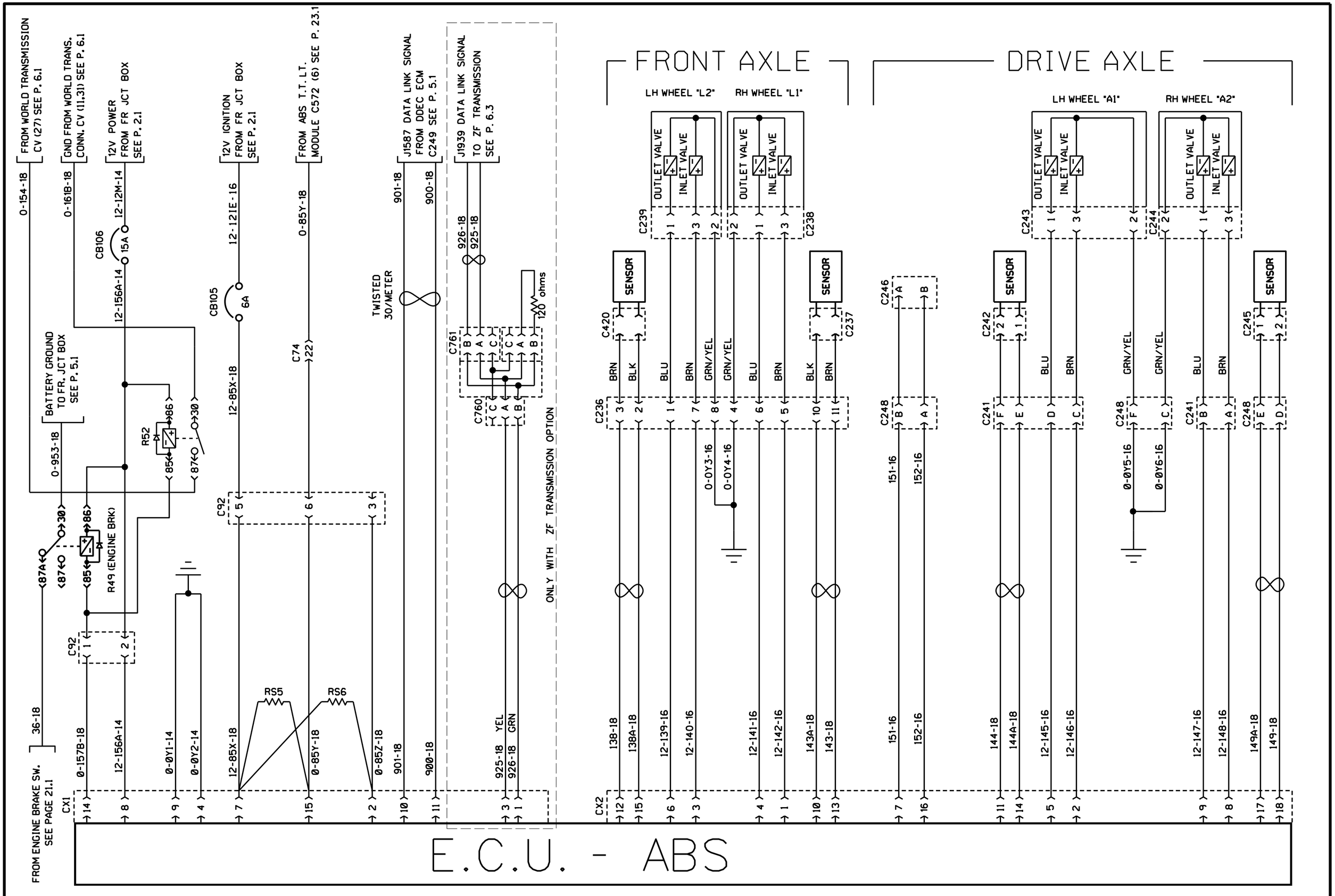
FROM WORLD TRANSMISSION CV (27) SEE P. 6.1
GND FROM WORLD TRANS. CONN. CV (11,31) SEE P. 6.1
12V POWER FROM FR JCT BOX SEE P. 2.1
12V IGNITION FROM FR JCT BOX SEE P. 2.1
FROM ABS T.T. LT. MODULE C572 (6) SEE P. 23.1
J1587 DATA LINK SIGNAL FROM DDEC ECM C249 SEE P. 5.1
J1939 DATA LINK SIGNAL TO ZF TRANSMISSION SEE P. 6.3
BATTERY GROUND TO FR. JCT BOX SEE P. 5.1
FROM ENGINE BRAKE SW. SEE PAGE 21.1
R49 (ENGINE BRK)
R52
CB106
CB105
TWISTED 30/METER
ONLY WITH ZF TRANSMISSION OPTION
120 ohms
RS5
RS6
FRONT AXLE
LH WHEEL "L2"
RH WHEEL "L1"
DRIVE AXLE
LH WHEEL "A1"
RH WHEEL "A2"
OUTLET VALVE
INLET VALVE
SENSOR
CX1
CX2
E.C.U. - ABS

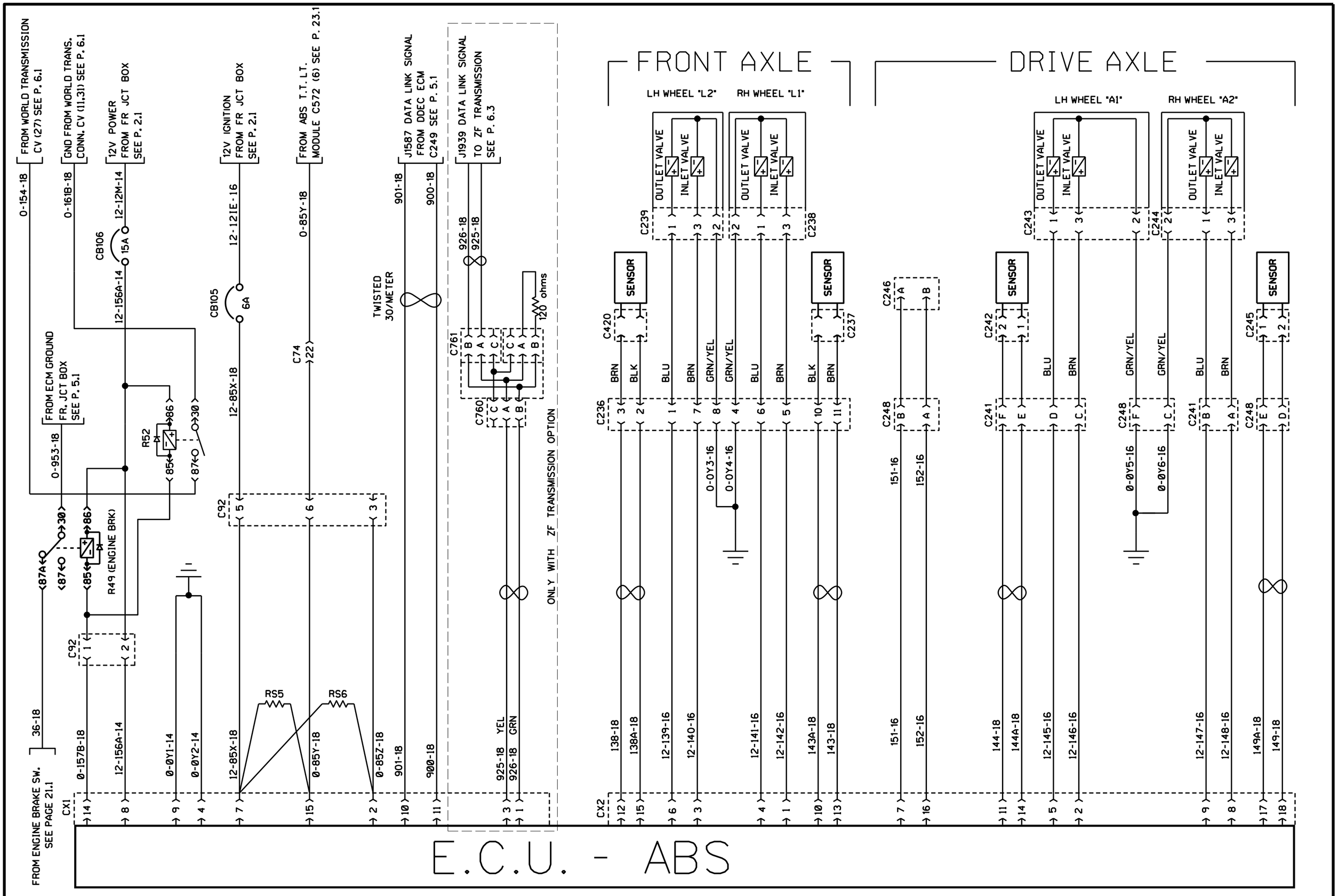

PREVOST	WIRING DIAGRAM	NO: D060993	PAGE: 22.1	REVISION 09

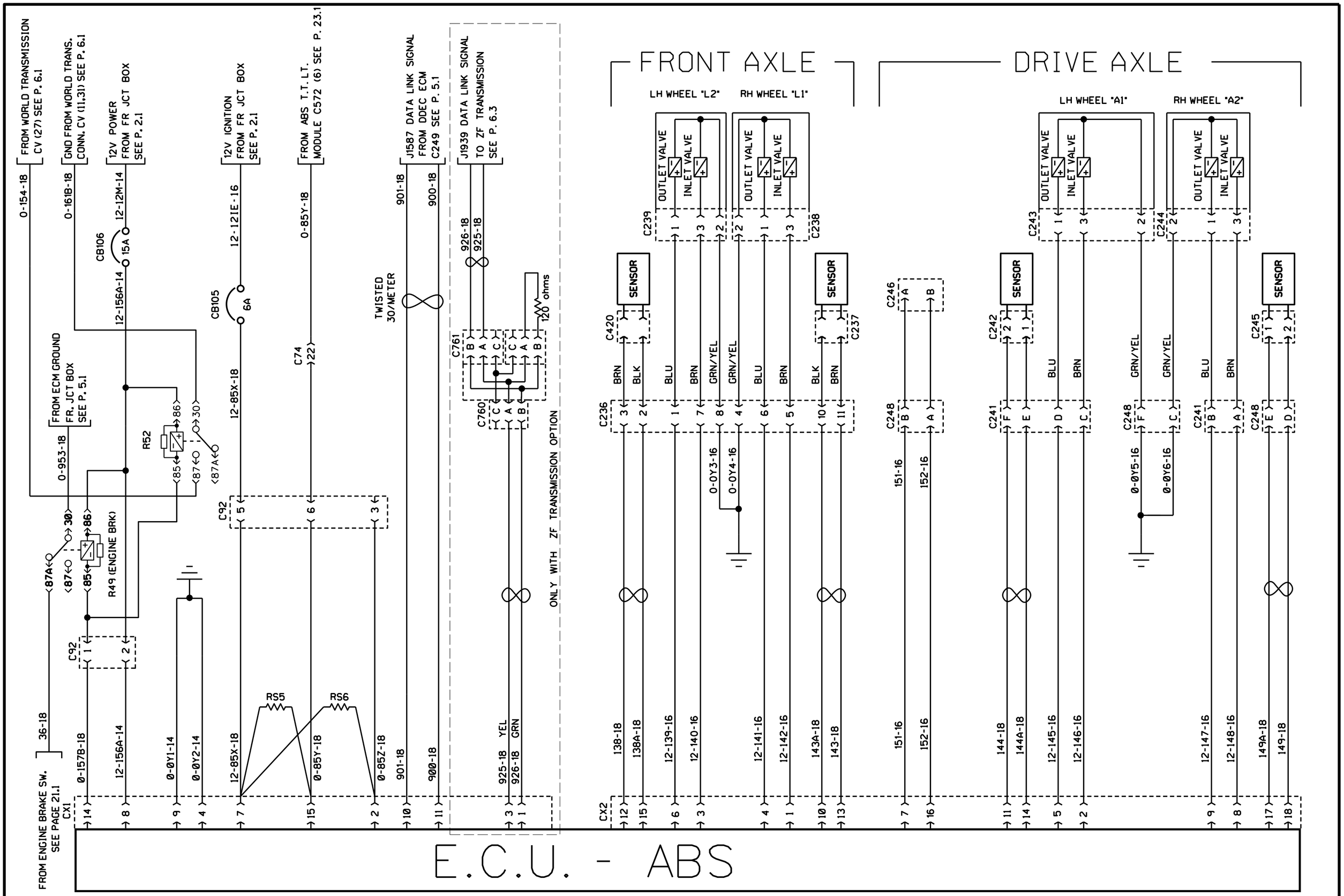
FROM WORLD TRANSMISSION CV (27) SEE P. 6.1
GND FROM WORLD TRANS. CONN. CV (11,31) SEE P. 6.1
12V POWER FROM FR JCT BOX SEE P. 2.1
12V IGNITION FROM FR JCT BOX SEE P. 2.1
FROM ABS T.T. LT. MODULE C572 (6) SEE P. 23.1
J1587 DATA LINK SIGNAL FROM DDEC ECM C249 SEE P. 5.1
J1939 DATA LINK SIGNAL TO ZF TRANSMISSION SEE P. 6.3
FROM ECM GROUND FR. JCT BOX SEE P. 5.1
FROM ENGINE BRAKE SW. SEE PAGE 21.1
R49 (ENGINE BRK)
R52
CB106
CB105
TWISTED 30/METER
ONLY WITH ZF TRANSMISSION OPTION
120 ohms
RS5
RS6
FRONT AXLE
LH WHEEL "L2"
RH WHEEL "L1"
DRIVE AXLE
LH WHEEL "A1"
RH WHEEL "A2"
OUTLET VALVE
INLET VALVE
SENSOR
E.C.U. - ABS

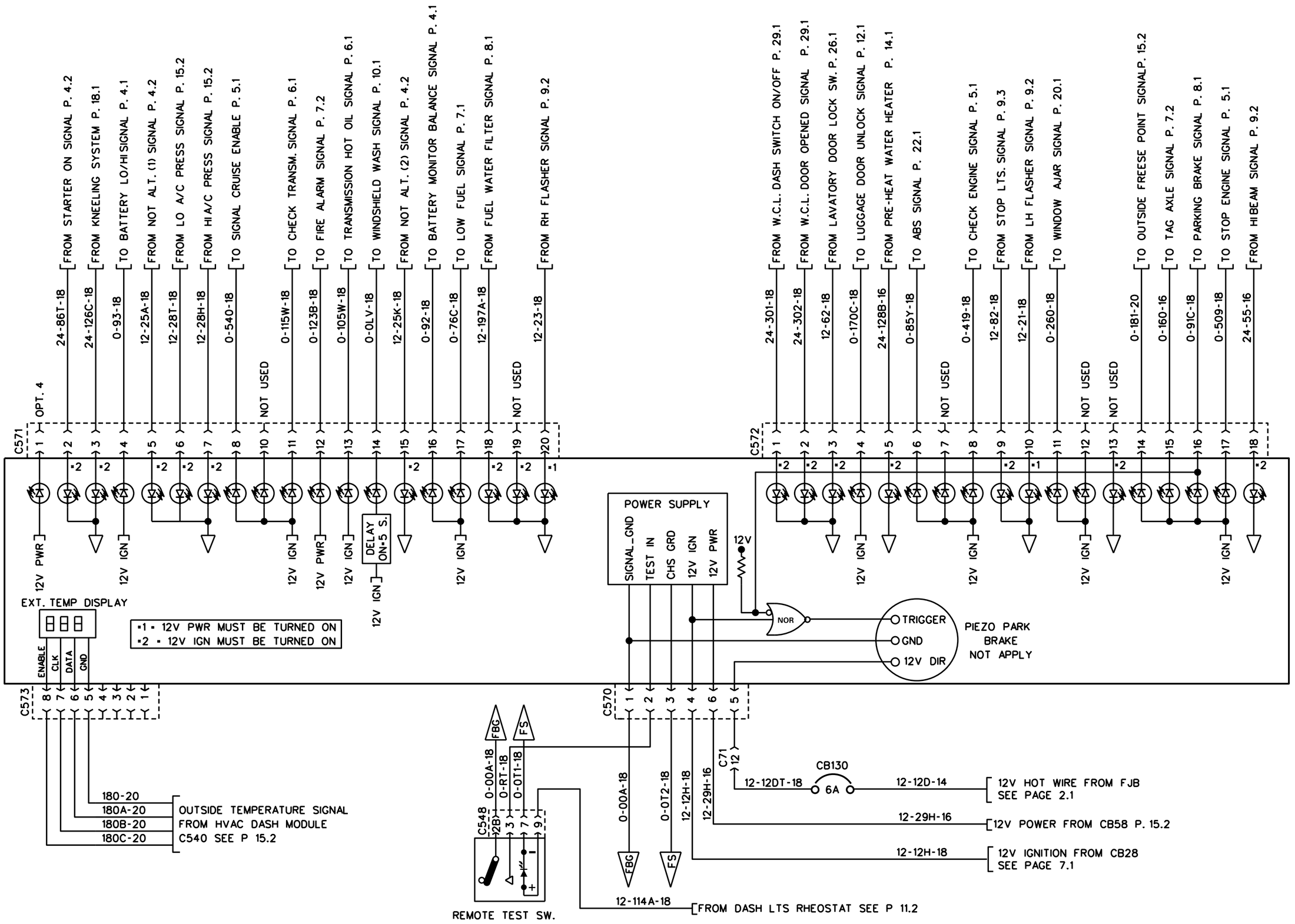

TELL TALE LIGHTS MODULE

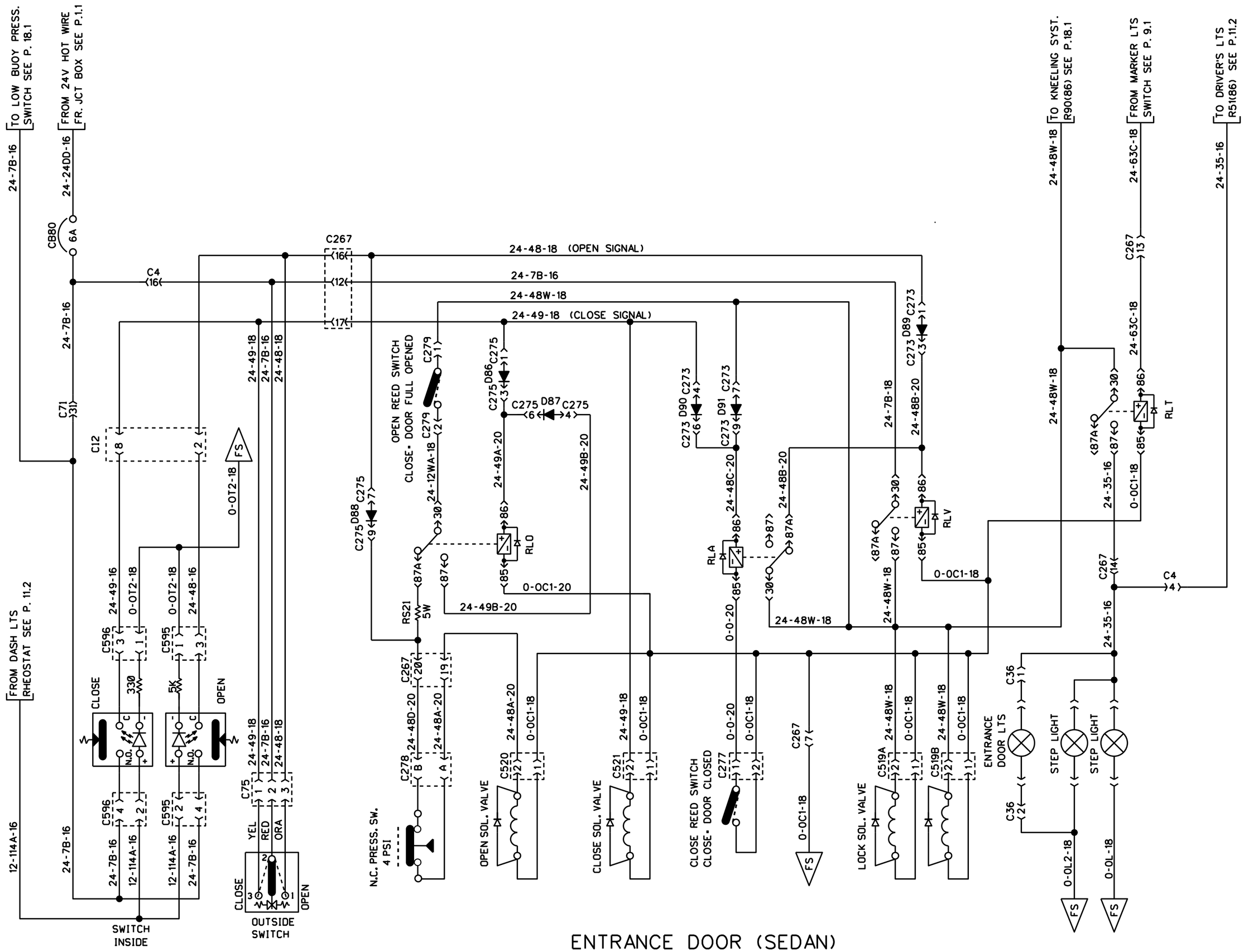

ENTRANCE DOOR (SEDAN)

PREVOST	WIRING DIAGRAM	NO: D060993	PAGE: 24.1	REVISION 00

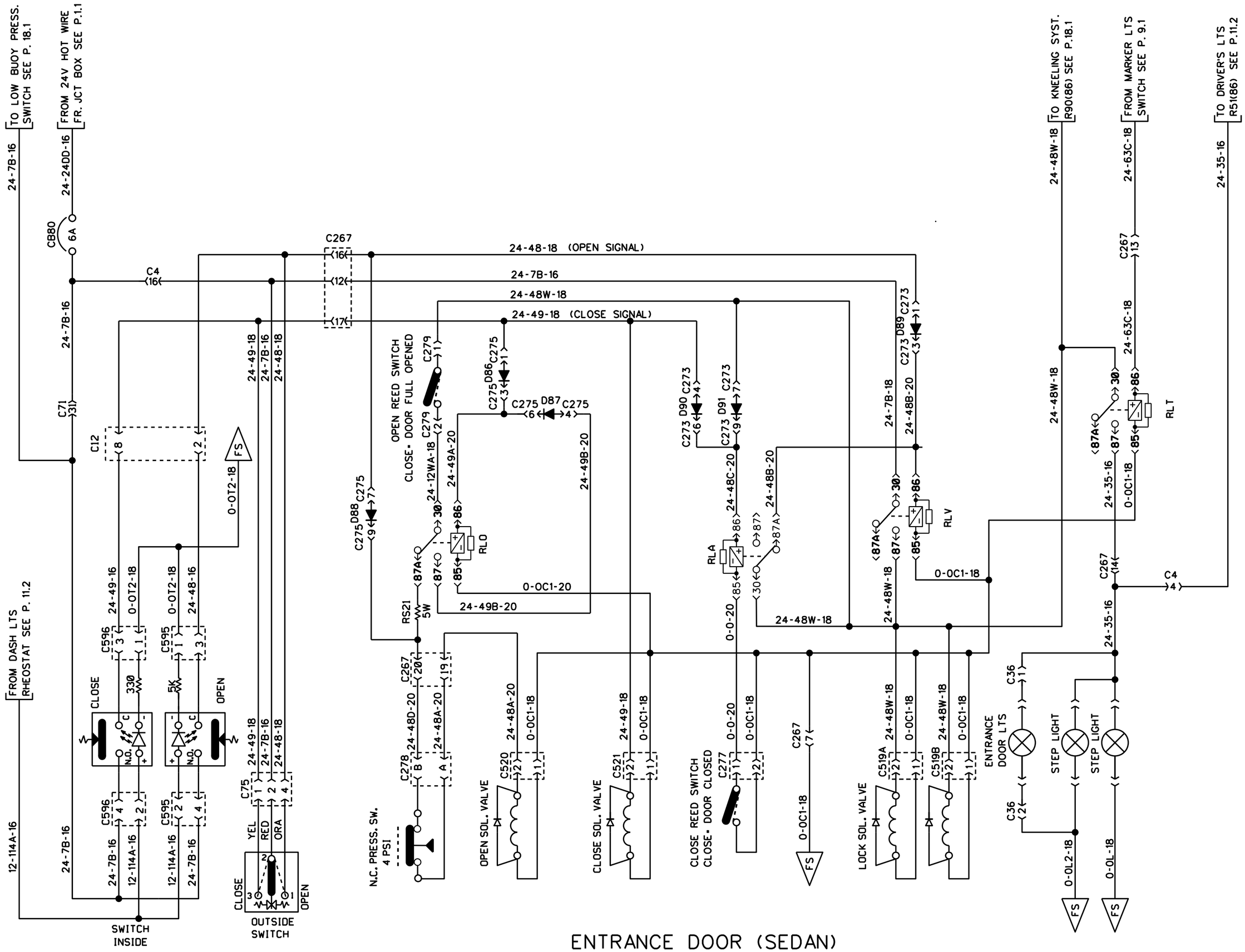

ENTRANCE DOOR (SEDAN)

PREVOST	WIRING DIAGRAM	NO: D060993	PAGE: 24.1	REVISION 15

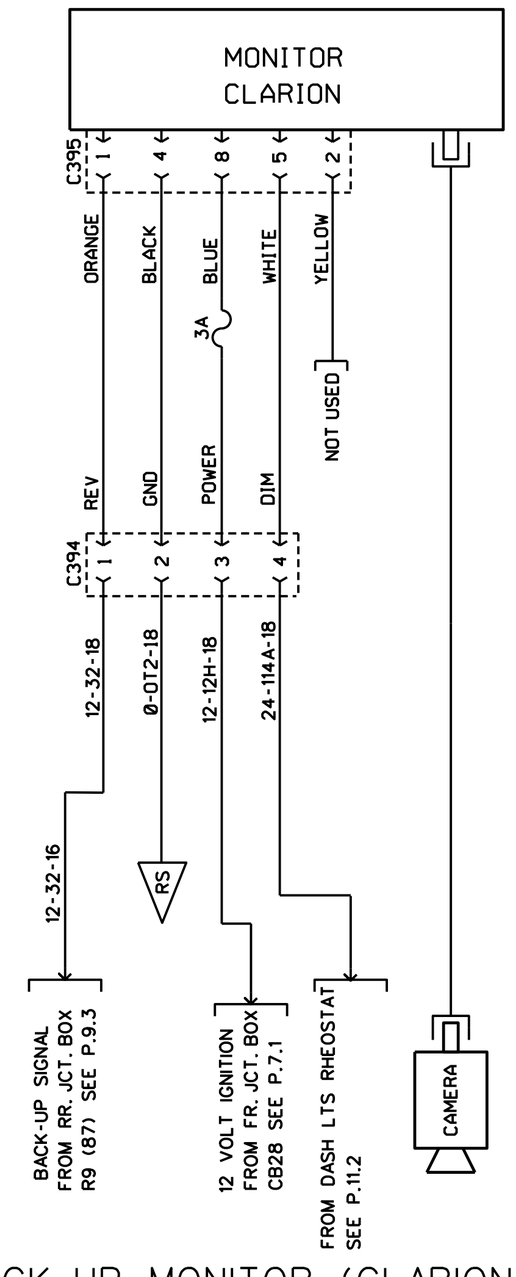

BACK-UP MONITOR (CLARION)

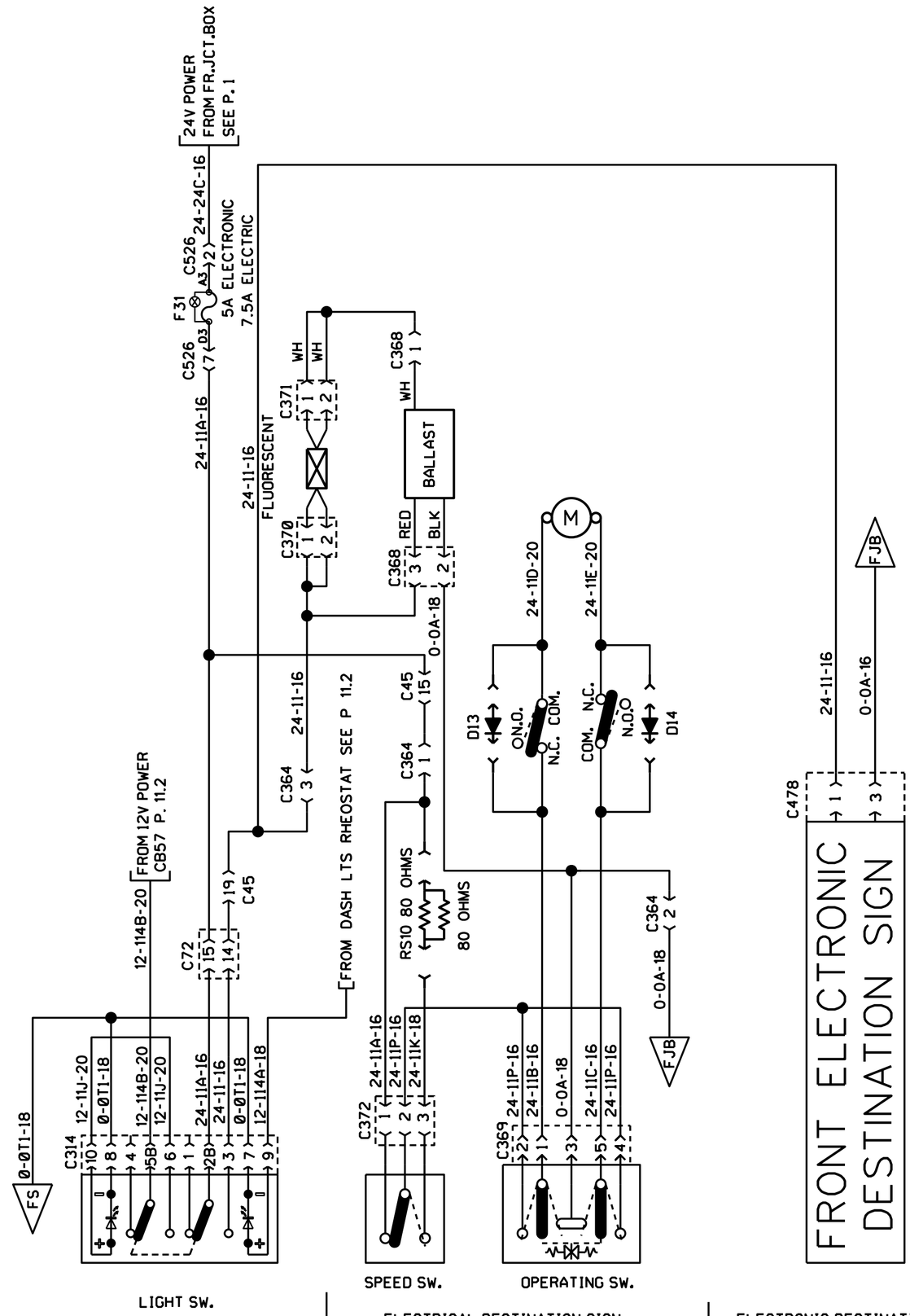

ELECTRICAL DESTINATION SIGN

ELECTRONIC DESTINATION SIGN

FRONT DESTINATION SIGN

PREVOST	WIRING DIAGRAM	NO: D060993	PAGE: 25.1	REVISION 00

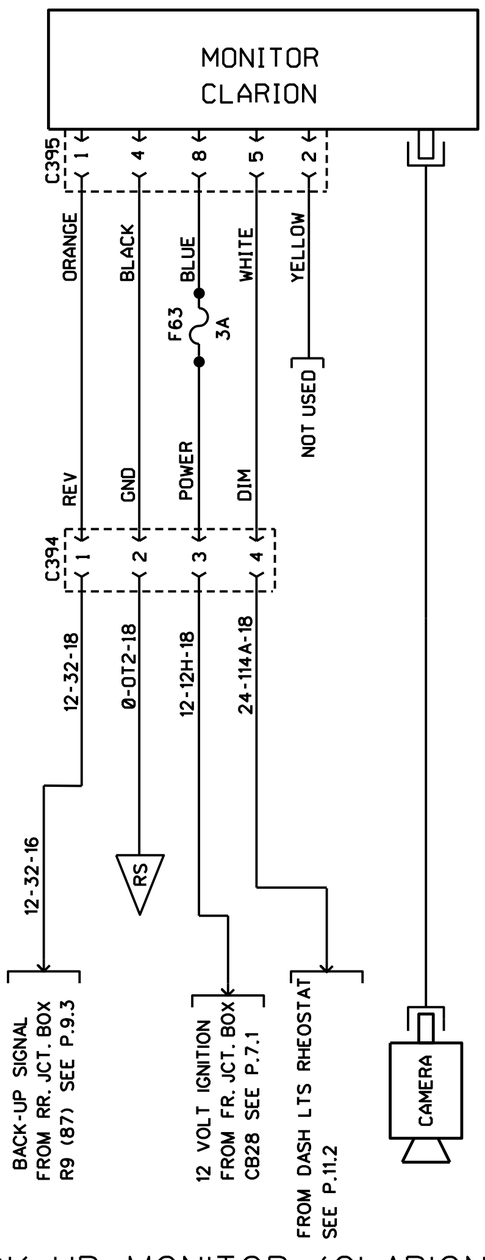

BACK-UP MONITOR (CLARION)

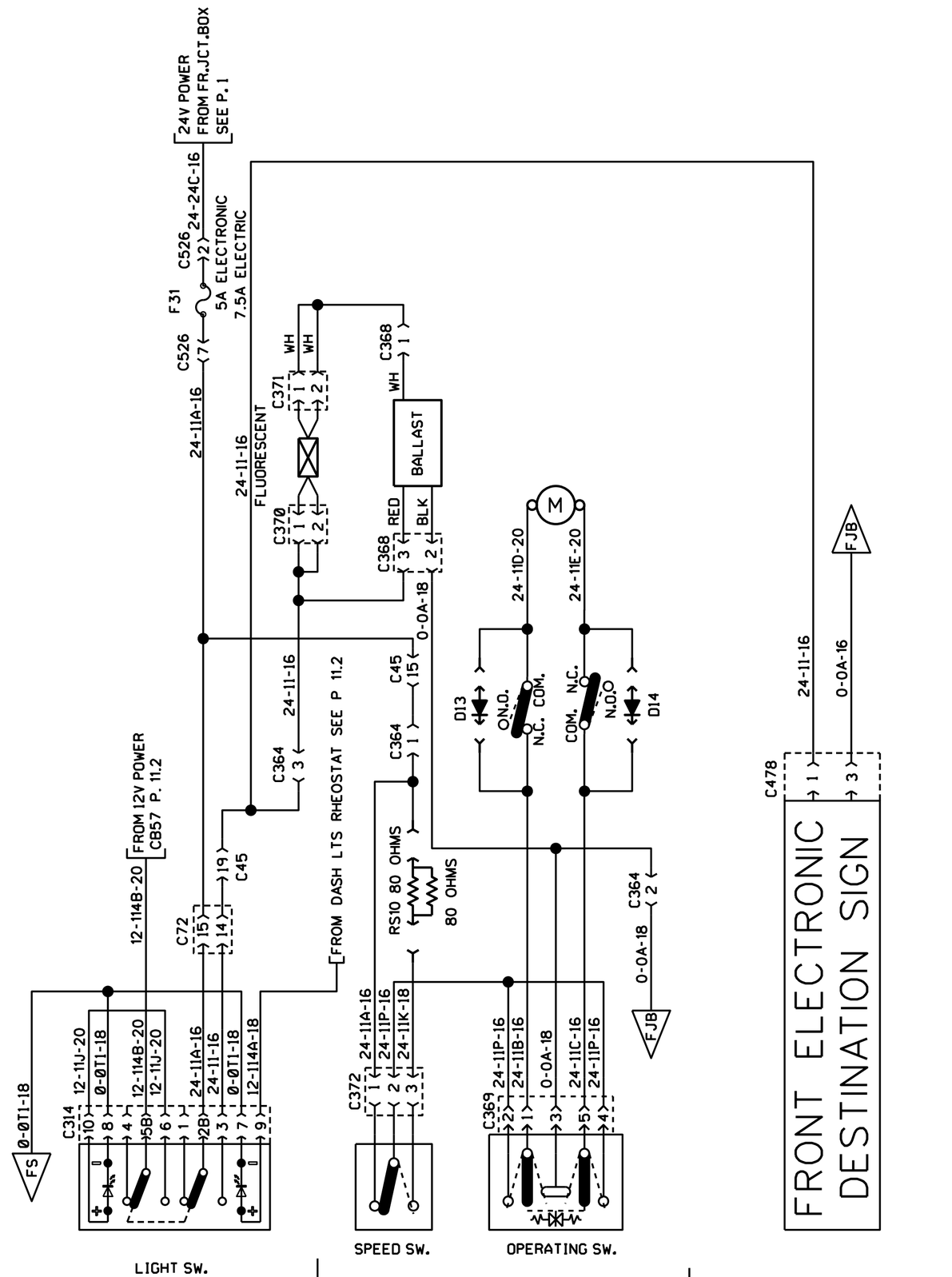

ELECTRICAL DESTINATION SIGN

ELECTRONIC DESTINATION SIGN

FRONT DESTINATION SIGN

PREVOST	WIRING DIAGRAM	NO: D060993	PAGE: 25.1	REVISION 05

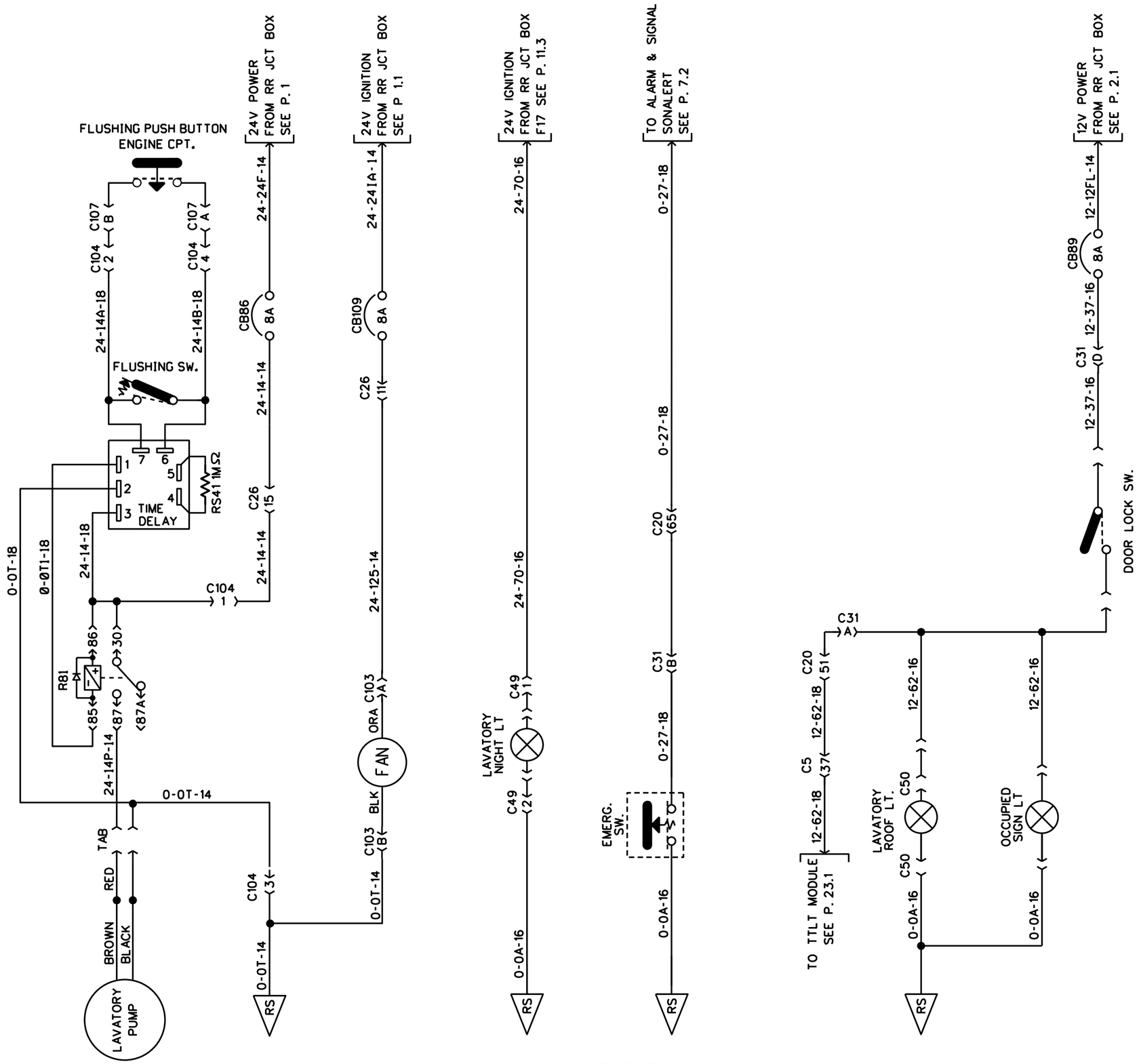

LAVATORY

PREVOST	WIRING DIAGRAM	NO: D060993	PAGE: 26.1	REVISION 00

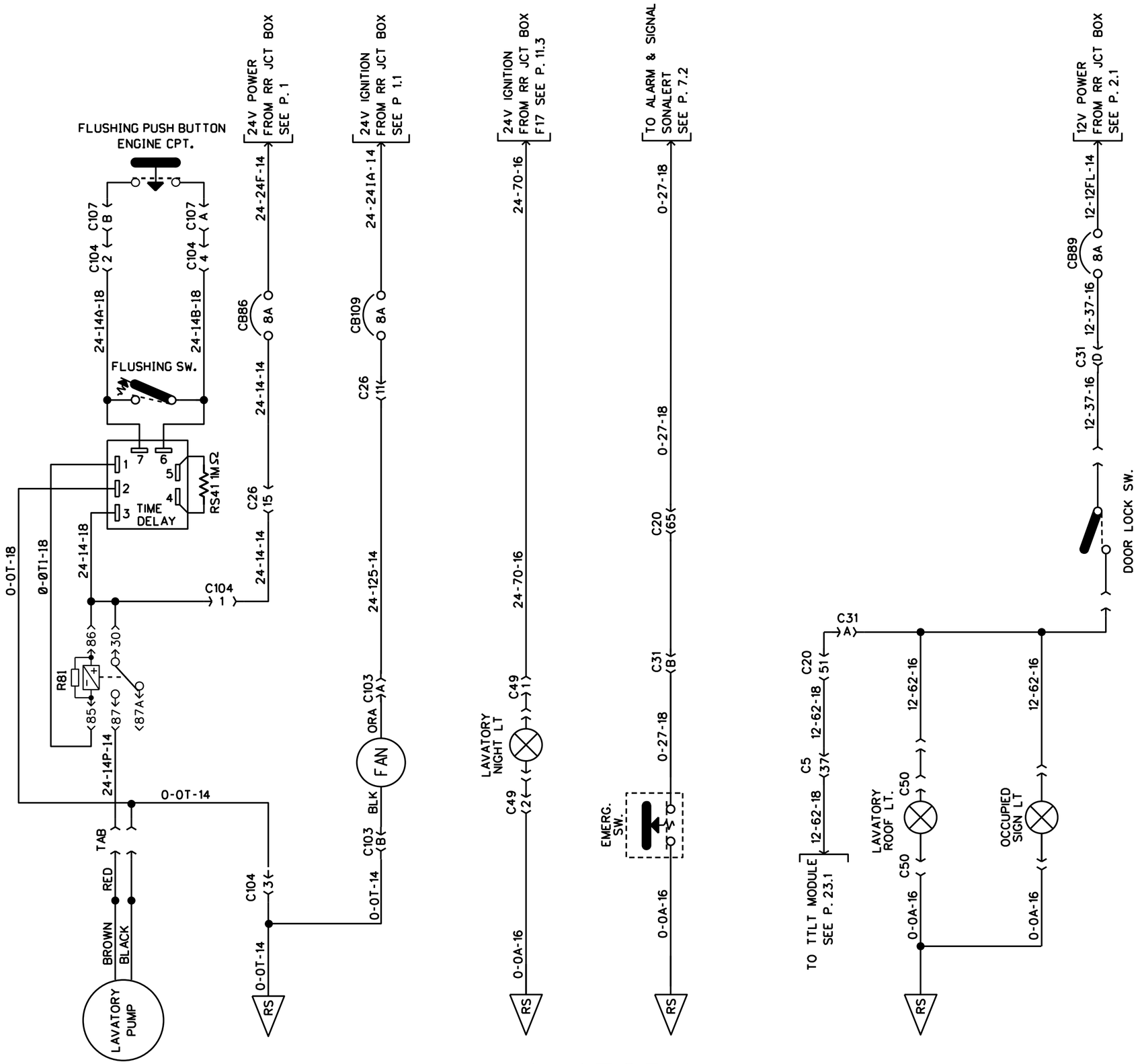

LAVATORY

PREVOST	WIRING DIAGRAM	NO: D060993	PAGE: 26.1	REVISION 15

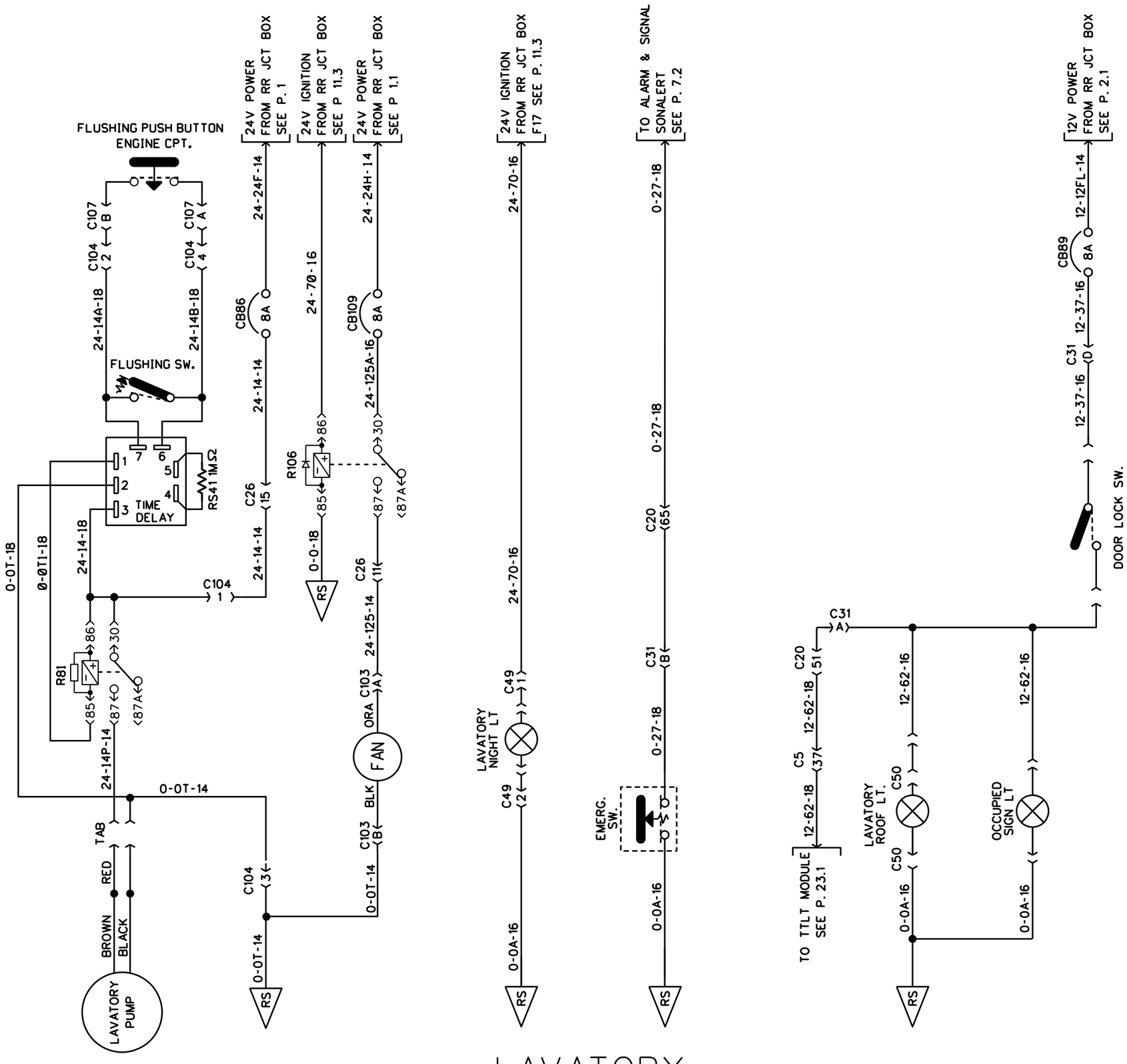

LAVATORY

PREVOST	WIRING DIAGRAM	NO: D060993	PAGE: 26.1	REVISION 18

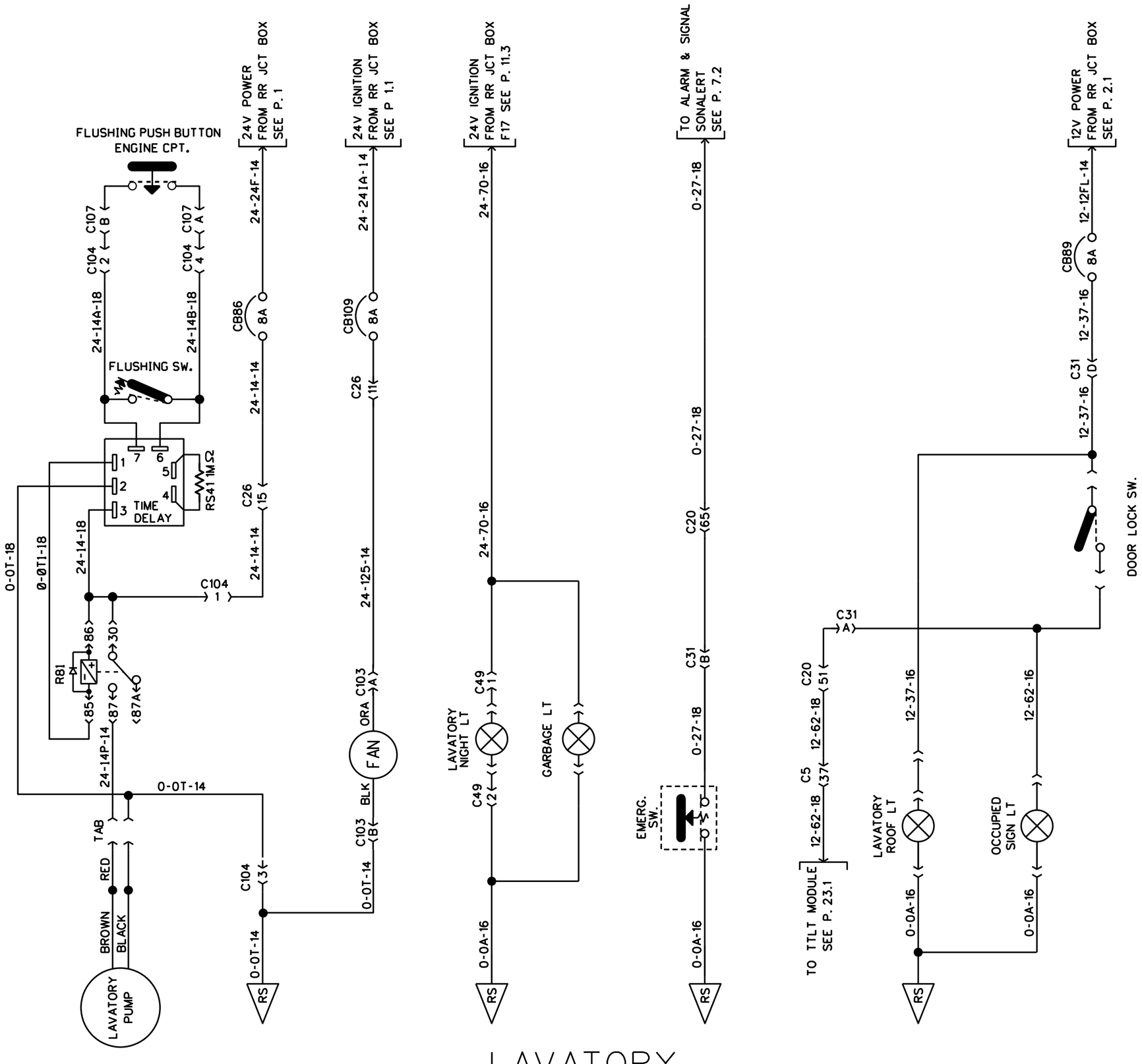

LAVATORY

PREVOST	WIRING DIAGRAM	NO: D060993	PAGE: 26.1 sp1	REVISION 00

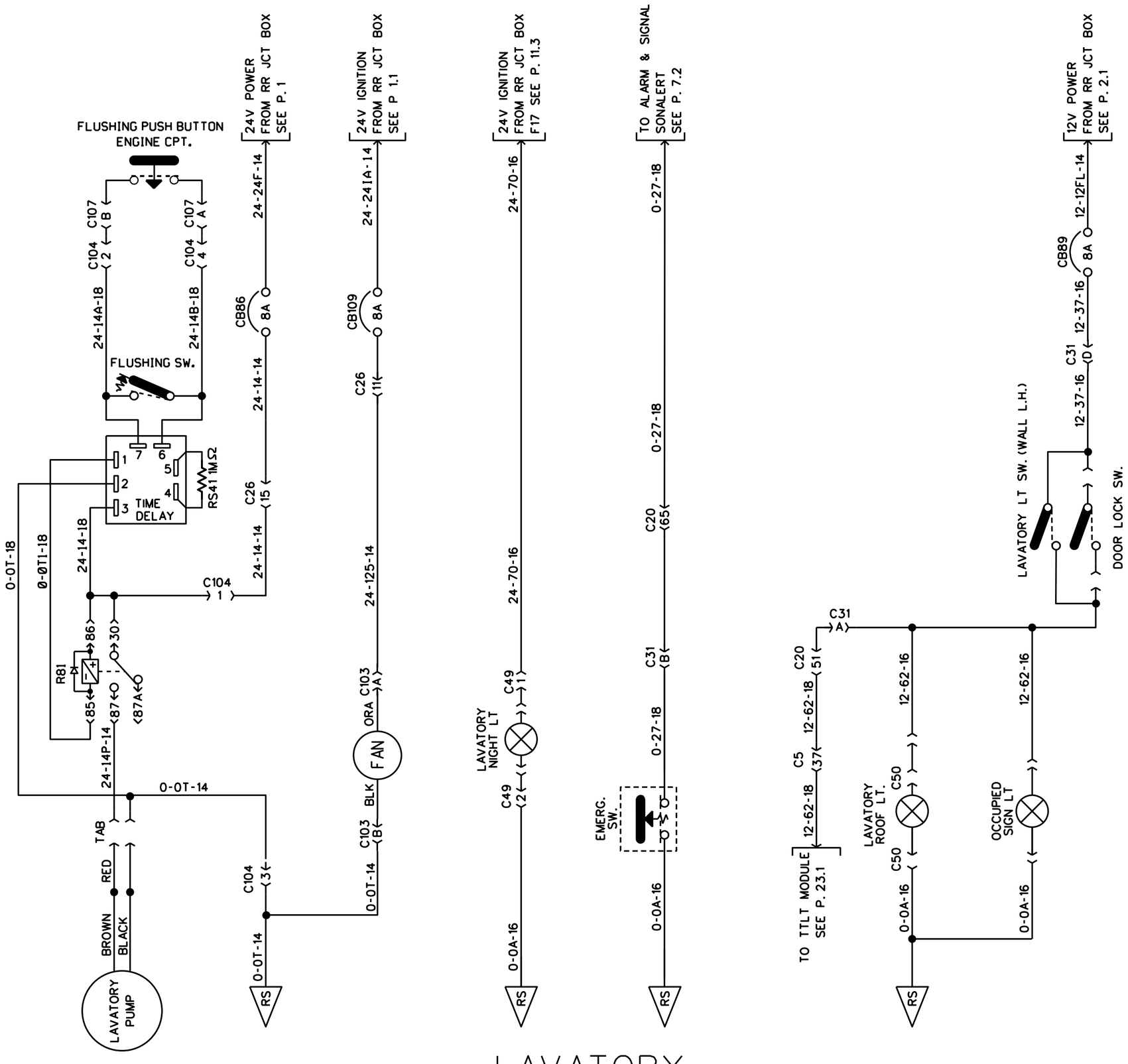
FLUSHING PUSH BUTTON
ENGINE CPT.
C104 2
C107 B
C104 4
C107 A
24-14A-18
24-14B-18
FLUSHING SW.
TIME DELAY
RS41 1MΩ
0-0T-18
0-0T1-18
24-14-18
C104 1
R81
86
30
85
87
87A
24-14P-14
0-0T-14
TAB
RED
BROWN
BLACK
LAVATORY PUMP
C104 3
0-0T-14
RS
24V POWER
FROM RR JCT BOX
SEE P. 1
24-24F-14
CB86
8A
24-14-14
C26 15
24-14-14
24V IGNITION
FROM RR JCT BOX
SEE P 1.1
24-241A-14
CB109
8A
C26 11
24-125-14
C103 A
ORA
FAN
BLK
C103 B
0-0T-14
24V IGNITION
FROM RR JCT BOX
F17 SEE P. 11.3
24-70-16
24-70-16
C49 1
LAVATORY NIGHT LT
C49 2
0-0A-16
RS
TO ALARM & SIGNAL
SONALERT
SEE P. 7.2
0-27-18
0-27-18
C20 65
C31 B
0-27-18
EMERG. SW.
0-0A-16
RS
12V POWER
FROM RR JCT BOX
SEE P. 2.1
12-12FL-14
CB89
8A
12-37-16
C31 D
12-37-16
LAVATORY LT SW. (WALL L.H.)
DOOR LOCK SW.
C31 A
C20 51
12-62-18
C5 37
12-62-18
TO TTLT MODULE
SEE P. 23.1
12-62-16
12-62-16
C50
LAVATORY ROOF LT.
C50
0-0A-16
RS
OCCUPIED SIGN LT
0-0A-16

LAVATORY

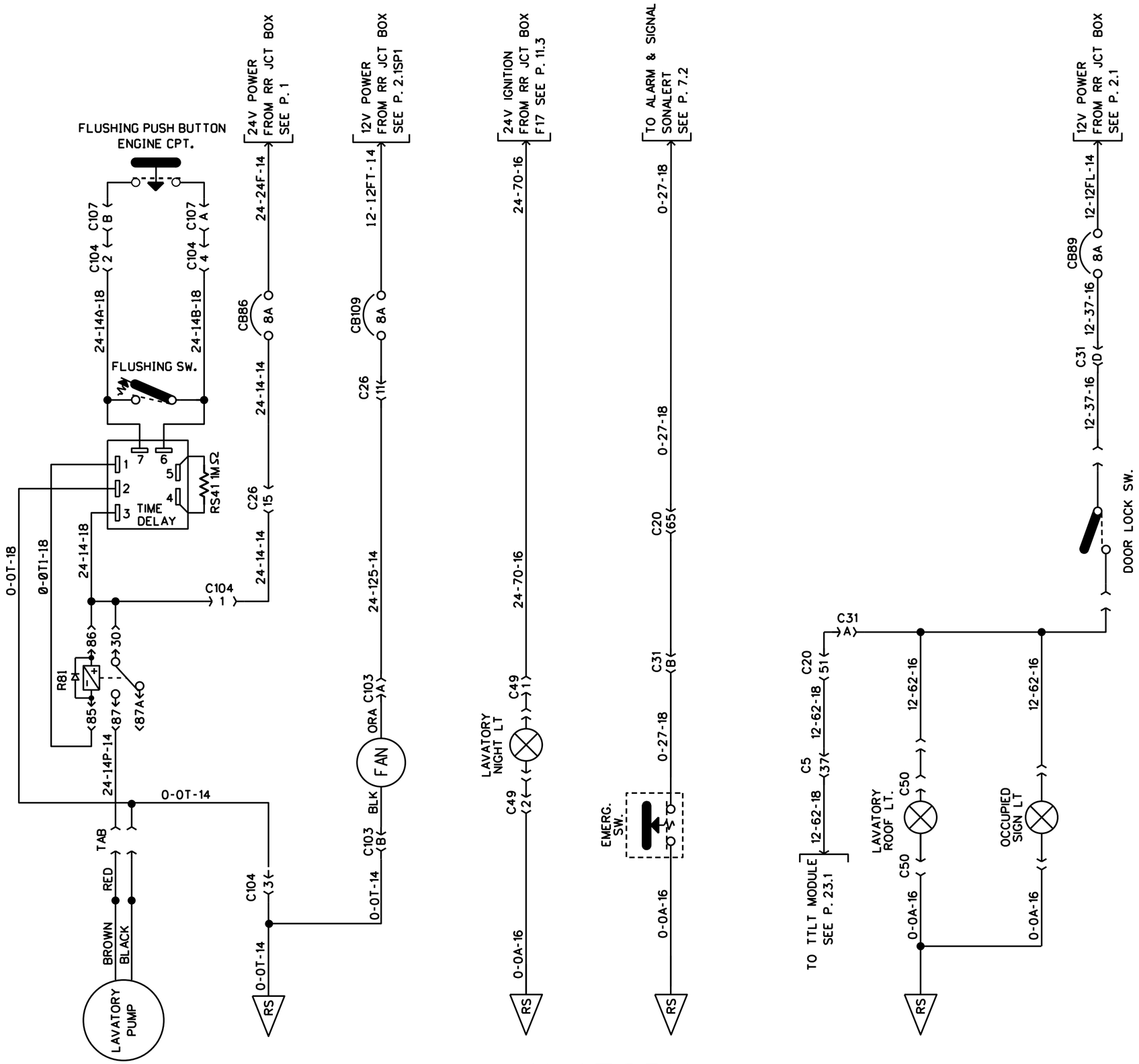

LAVATORY

PREVOST	WIRING DIAGRAM	NO: D060993	PAGE: 26.1sp3	REVISION 14

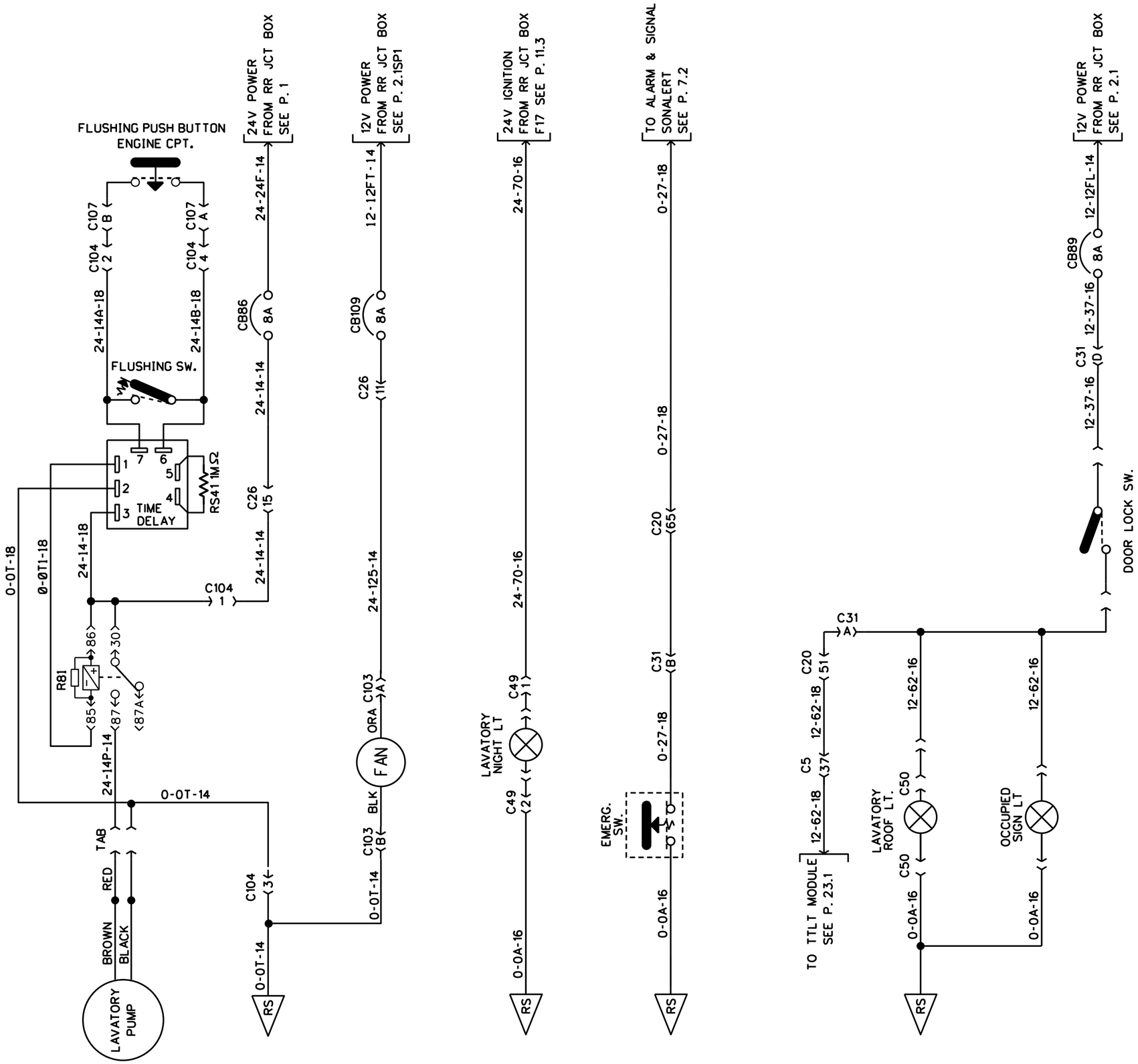
FLUSHING PUSH BUTTON
ENGINE CPT.
FLUSHING SW.
TIME DELAY
RS41 1MΩ
R81
LAVATORY PUMP
BROWN
BLACK
RED
TAB
FAN
ORA
BLK
LAVATORY NIGHT LT
EMERG. SW.
LAVATORY ROOF LT.
OCCUPIED SIGN LT
DOOR LOCK SW.
24V POWER FROM RR JCT BOX SEE P. 1
12V POWER FROM RR JCT BOX SEE P. 2.1SP1
24V IGNITION FROM RR JCT BOX F17 SEE P. 11.3
TO ALARM & SIGNAL SONALERT SEE P. 7.2
12V POWER FROM RR JCT BOX SEE P. 2.1
TO TTLT MODULE SEE P. 23.1
CB86
CB109
CB89
C104
C107
C26
C103
C49
C20
C31
C5
C50
RS

LAVATORY

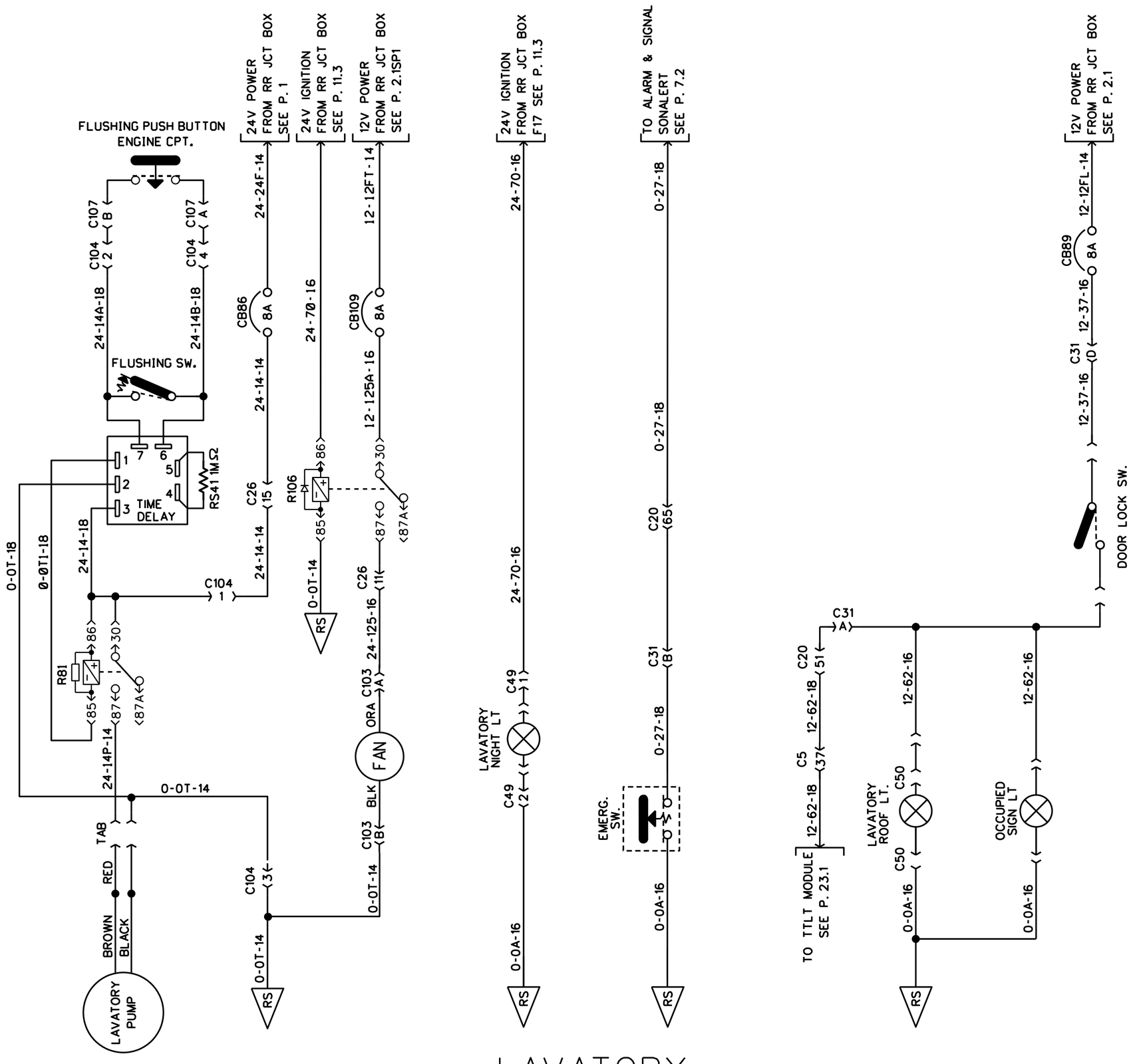

LAVATORY

PREVOST	WIRING DIAGRAM	NO: D060993	PAGE: 26.1sp3	REVISION 18

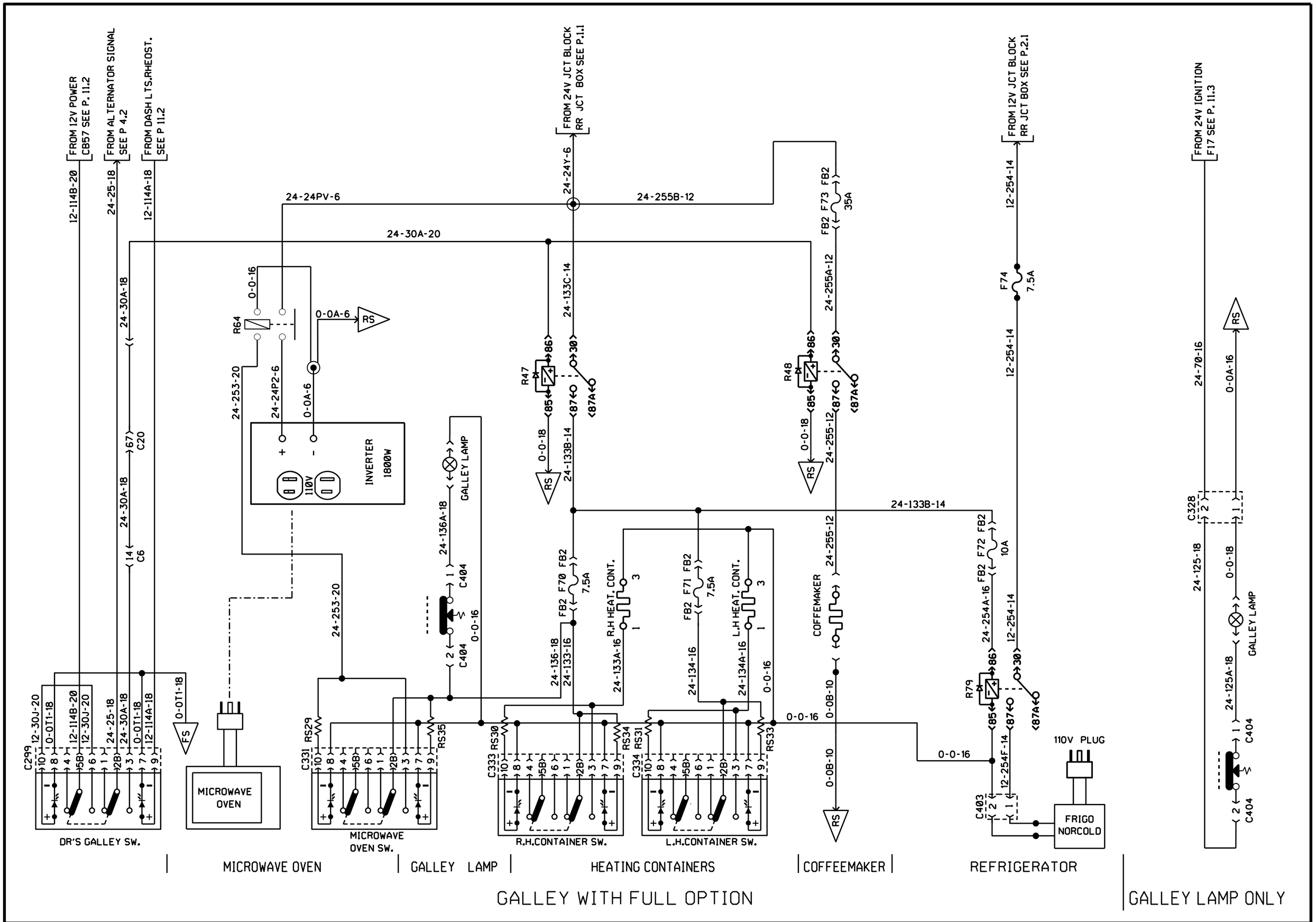

PREVOST	WIRING DIAGRAM	NO: D060993	PAGE: 27.1	REVISION 00

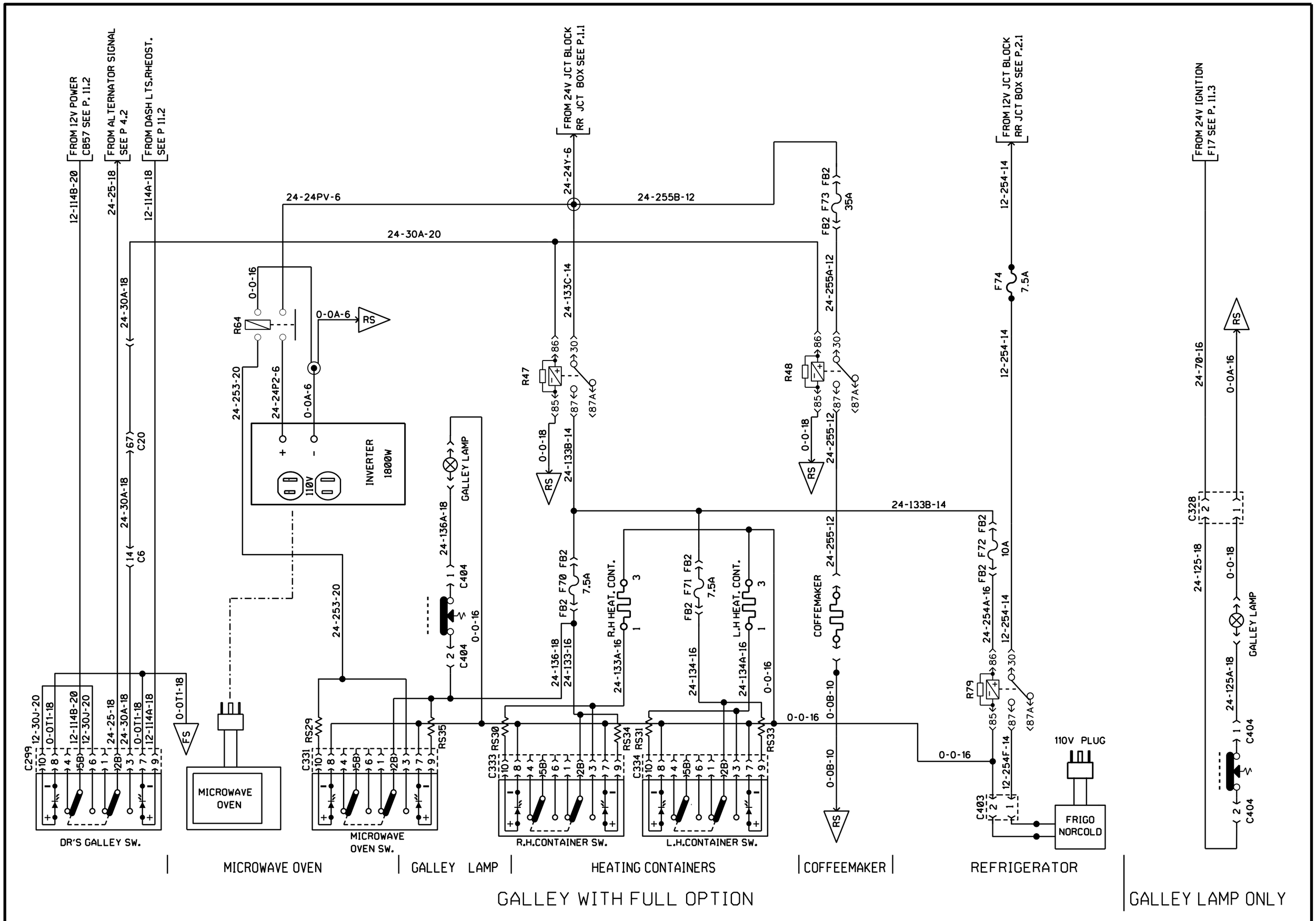

PREVOST	WIRING DIAGRAM	NO: D060993	PAGE: 27.1	REVISION 15

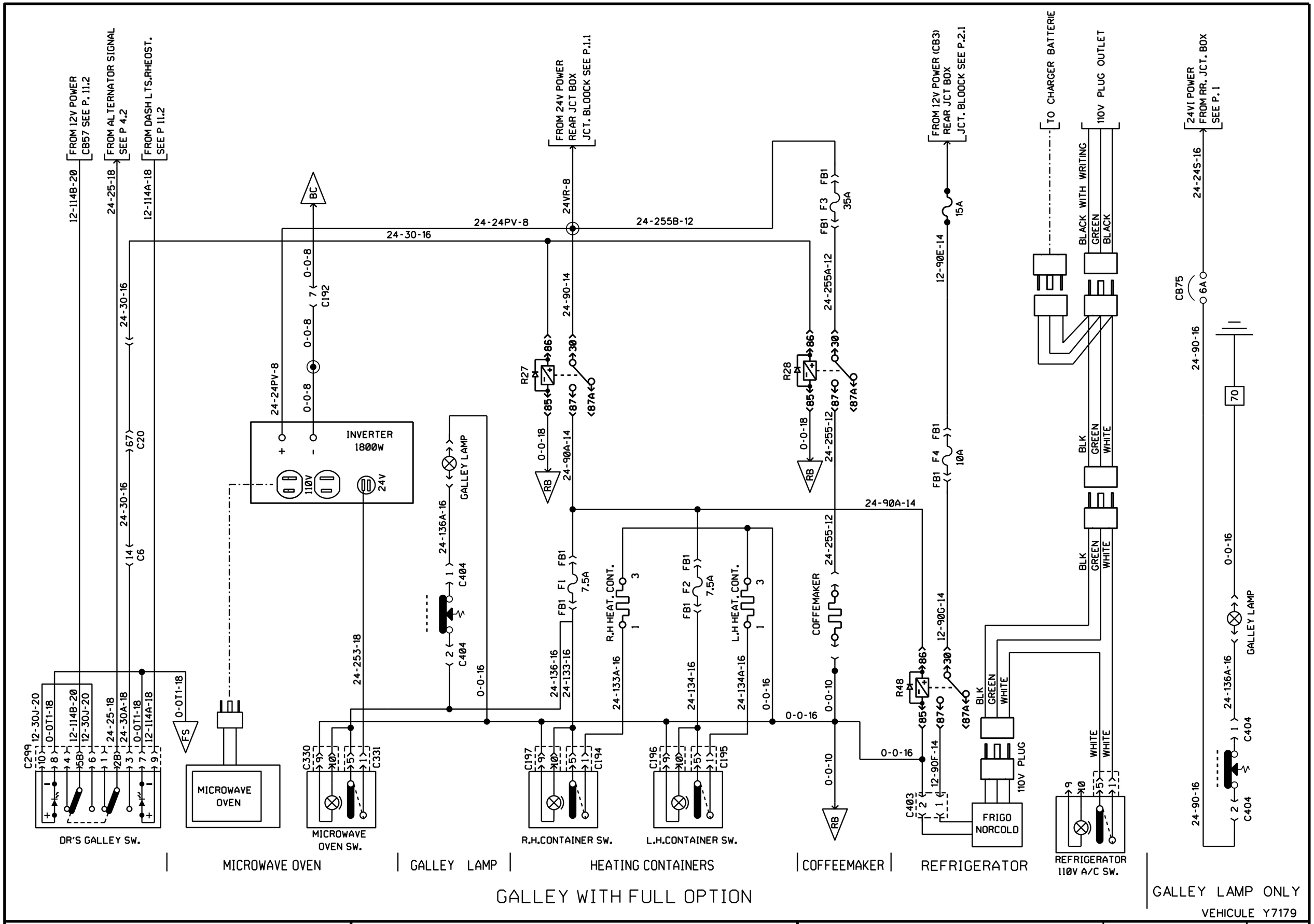

PREVOST	WIRING DIAGRAM	NO: D060993	PAGE: 27sp1	REVISION 00

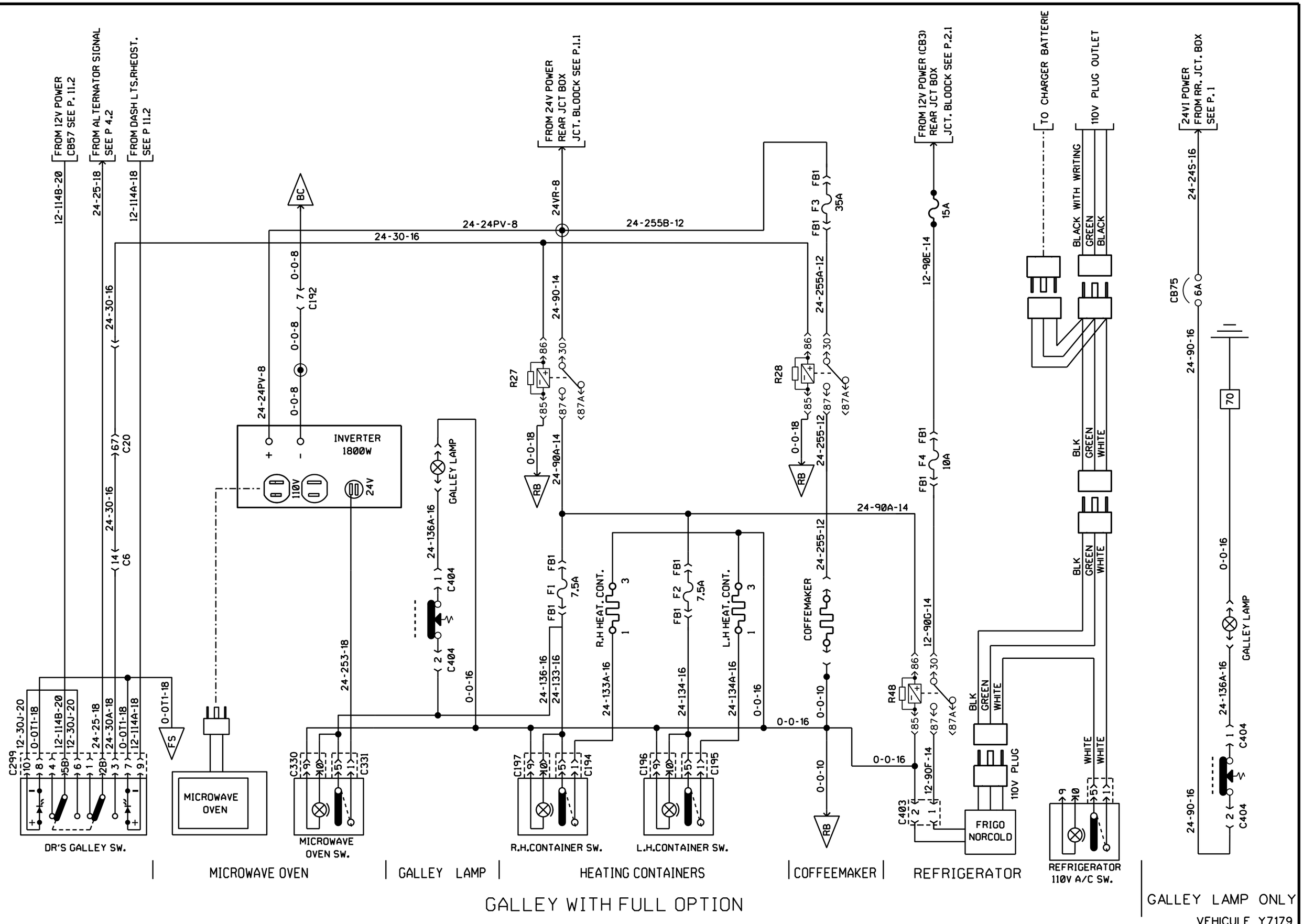

PREVOST	WIRING DIAGRAM	NO: D060993	PAGE: 27sp1	REVISION 15

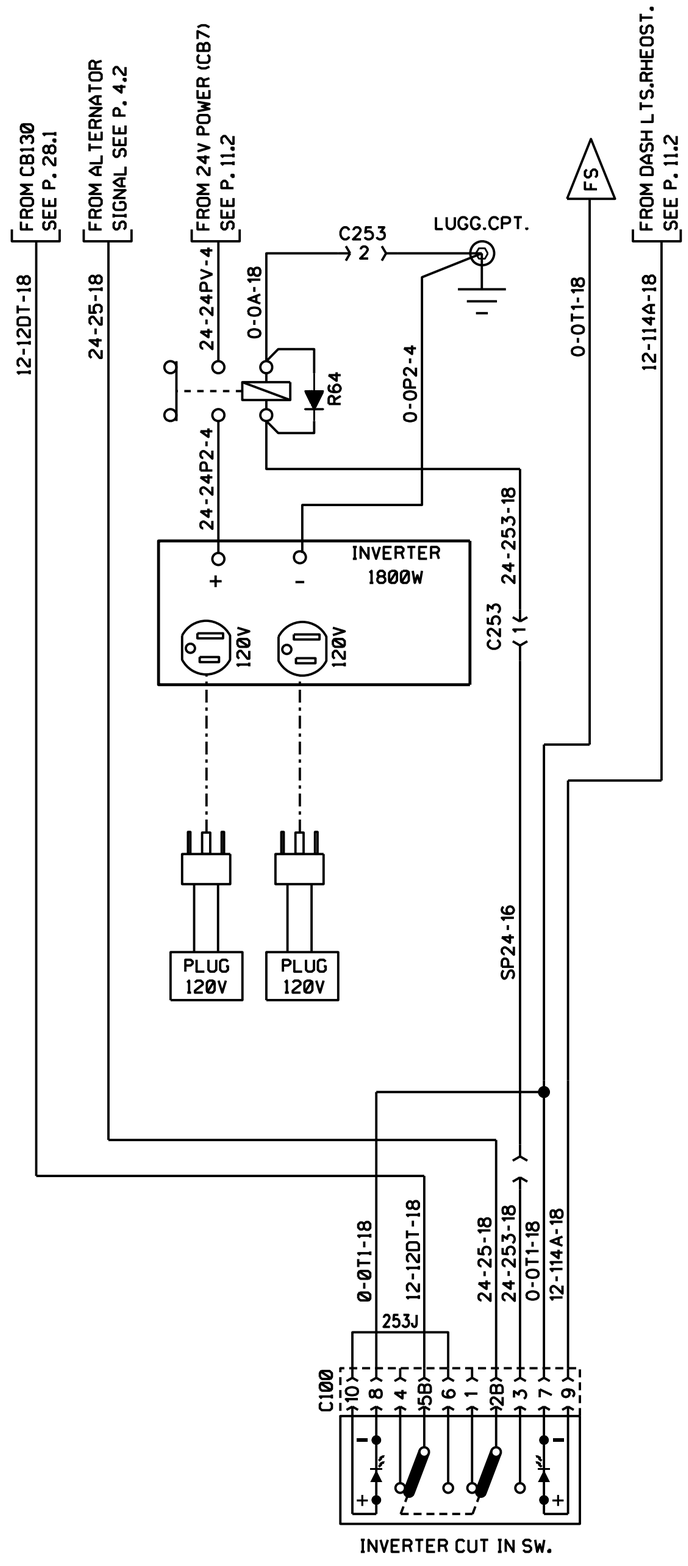

PLUG 120 VOLT

PREVOST	WIRING DIAGRAM	NO: D060993	PAGE: 27.1 sp2	REVISION 00

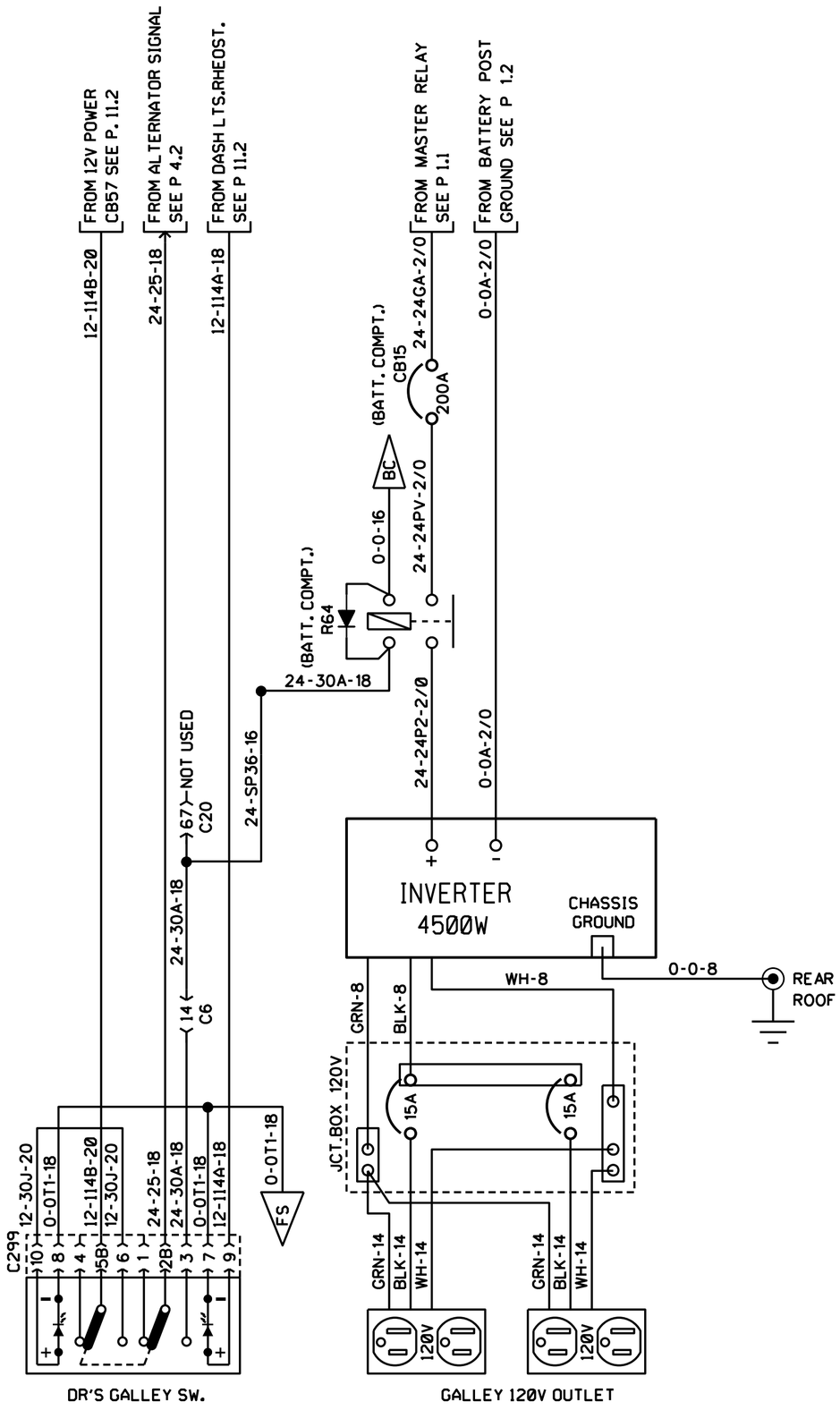

INVERTER GALLEY

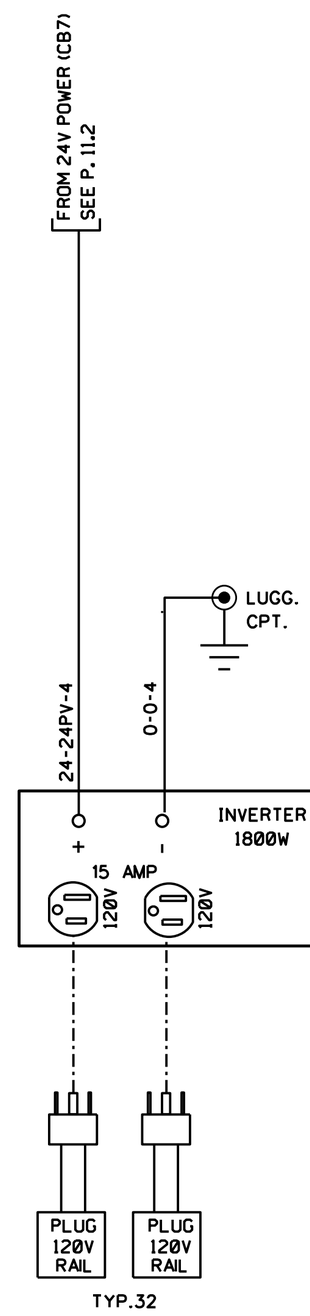

INVERTER PLUG 120 VOLT

PREVOST	WIRING DIAGRAM	NO: D060993	PAGE: 27.1 sp3	REVISION 00

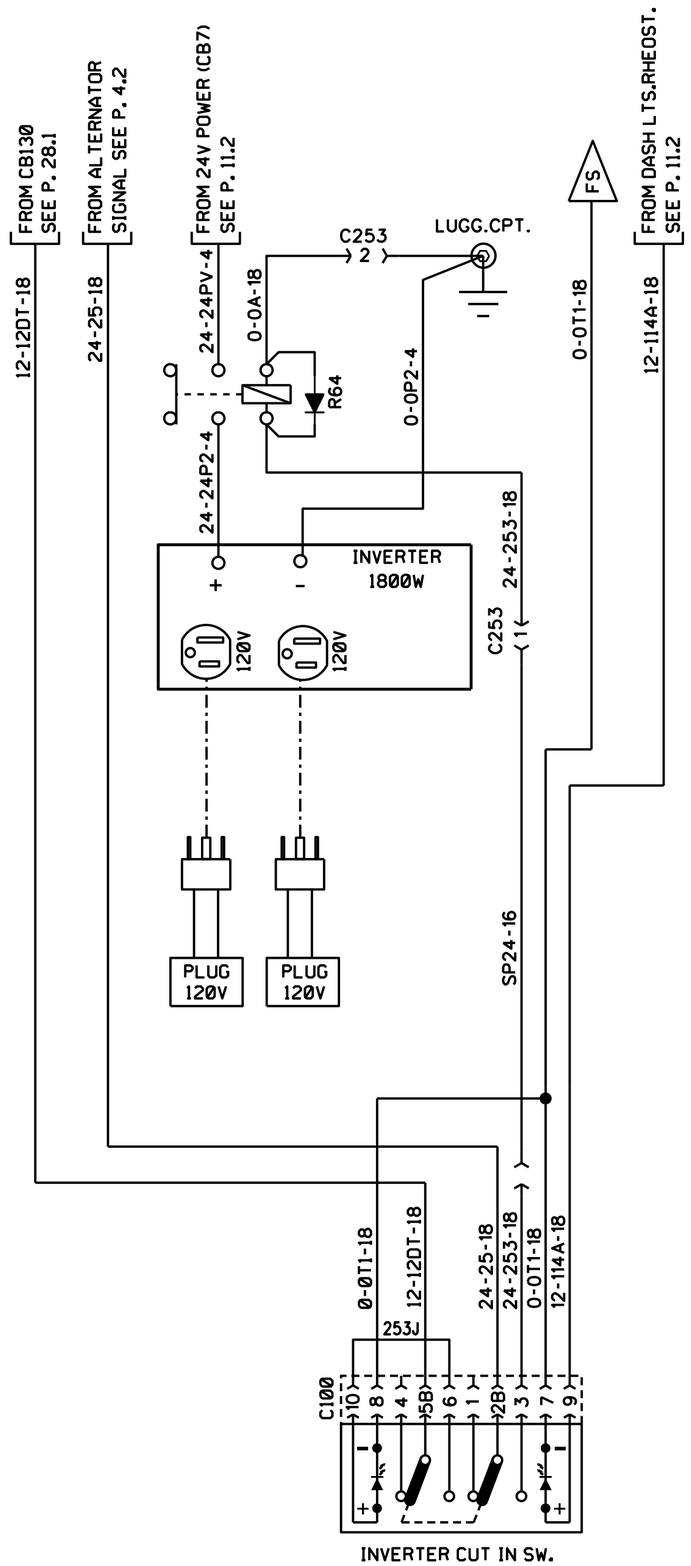

PLUG 120 VOLT

PREVOST	WIRING DIAGRAM	NO: D060993	PAGE: 27.1 sp4	REVISION 00

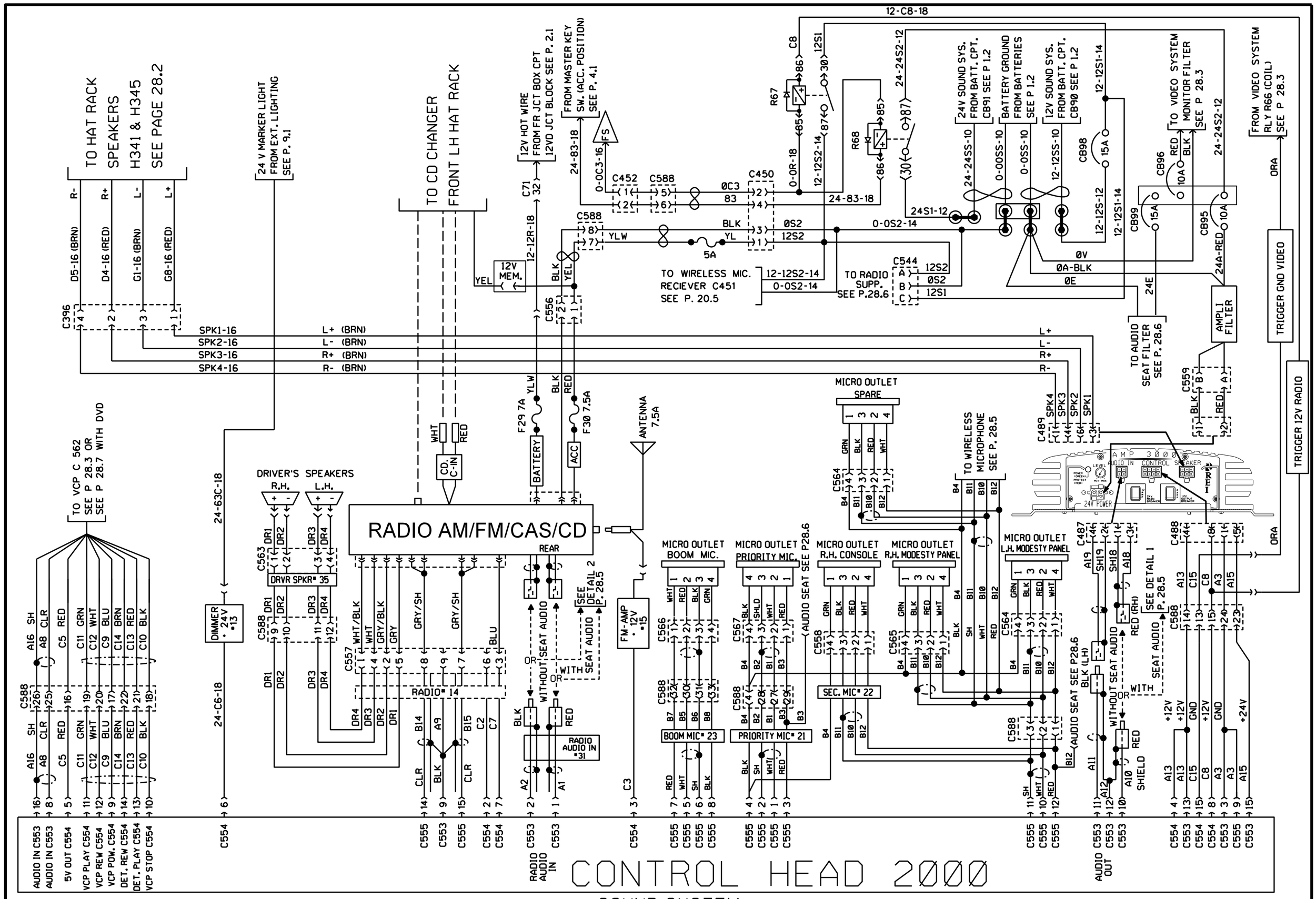

PREVOST	WIRING DIAGRAM	NO: D060993	PAGE: 28.1	REVISION 00

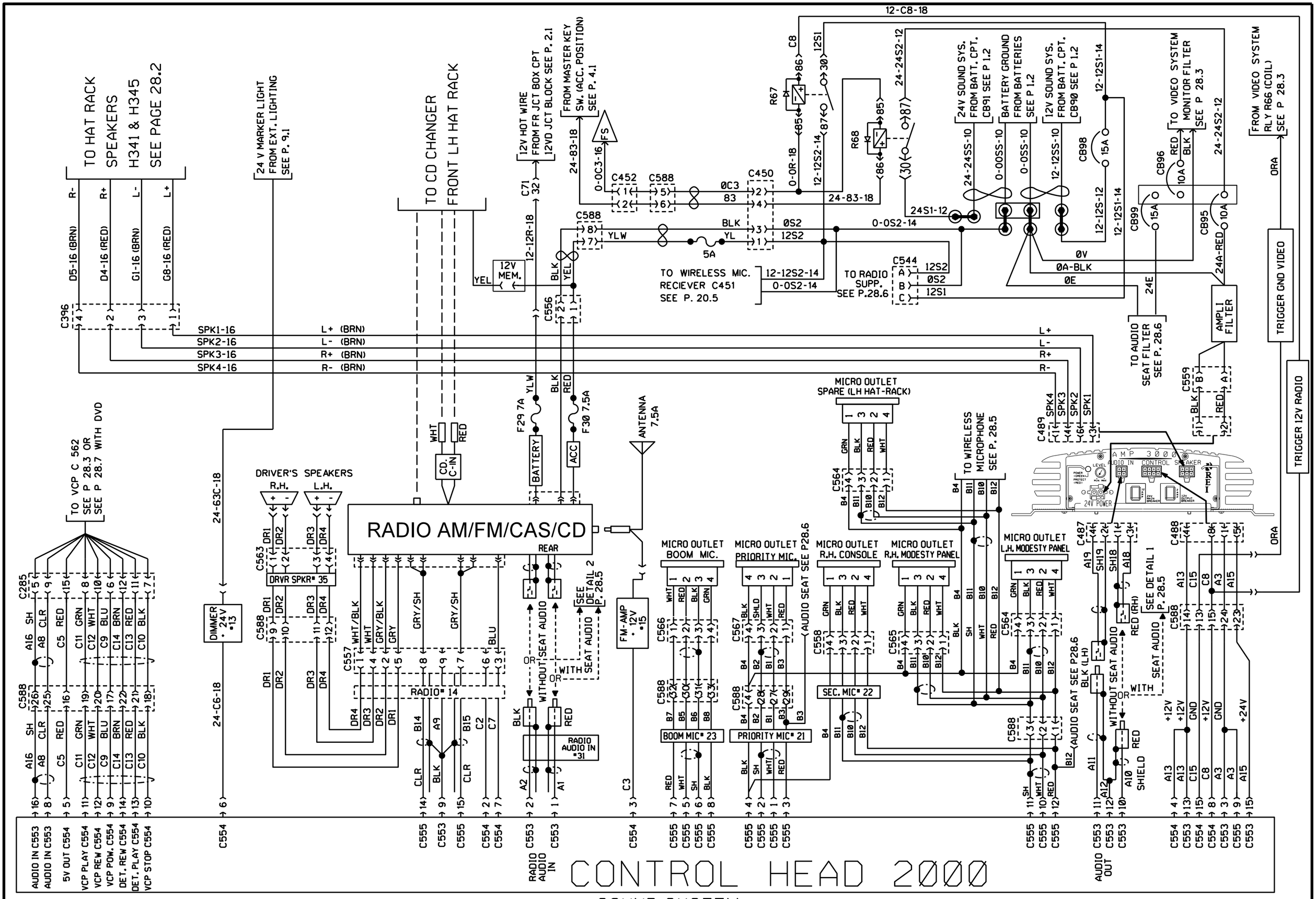

PREVOST	WIRING DIAGRAM	NO: D060993	PAGE: 28.1	REVISION 04

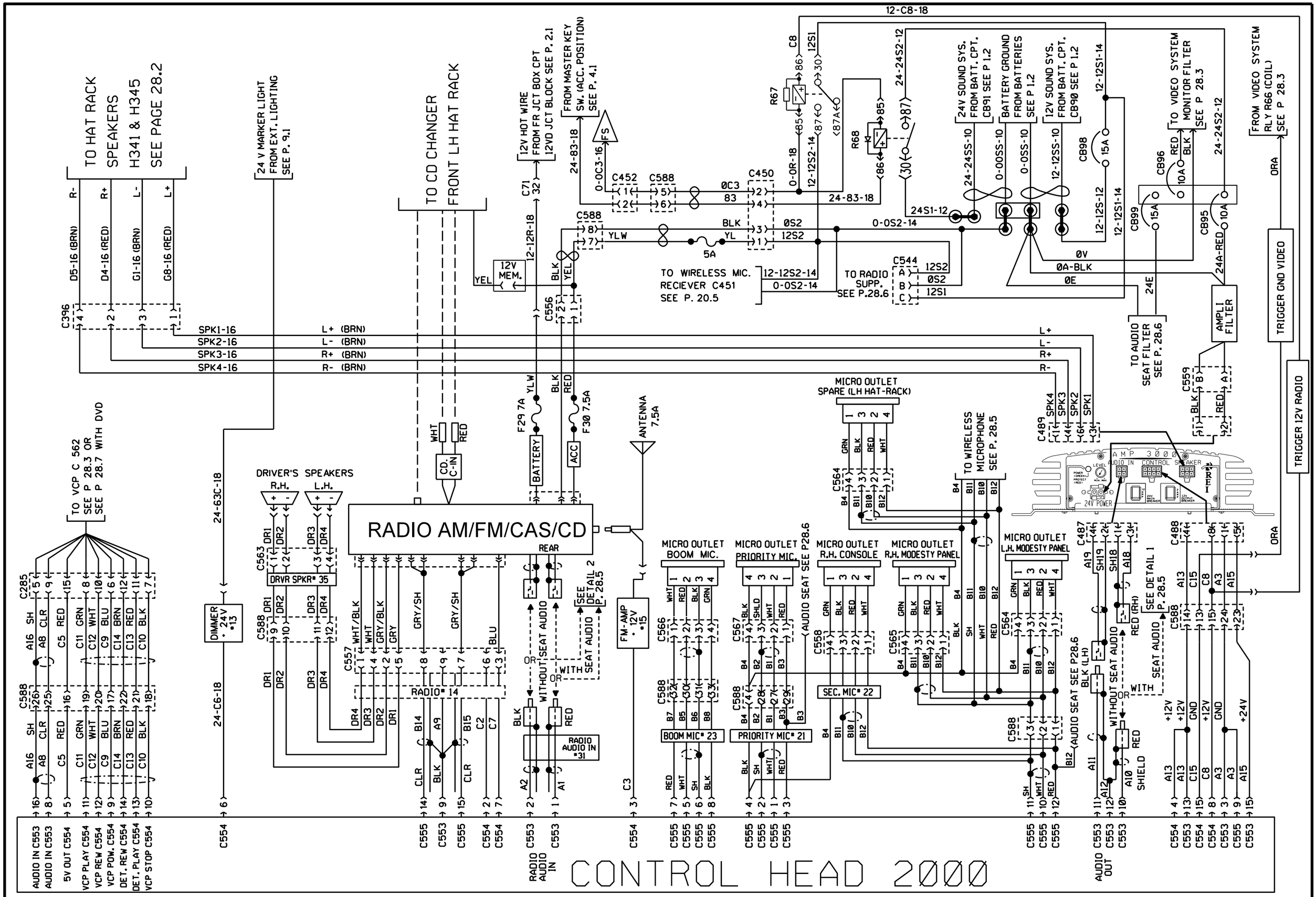

PREVOST	WIRING DIAGRAM	NO: D060993	PAGE: 28.1	REVISION 15

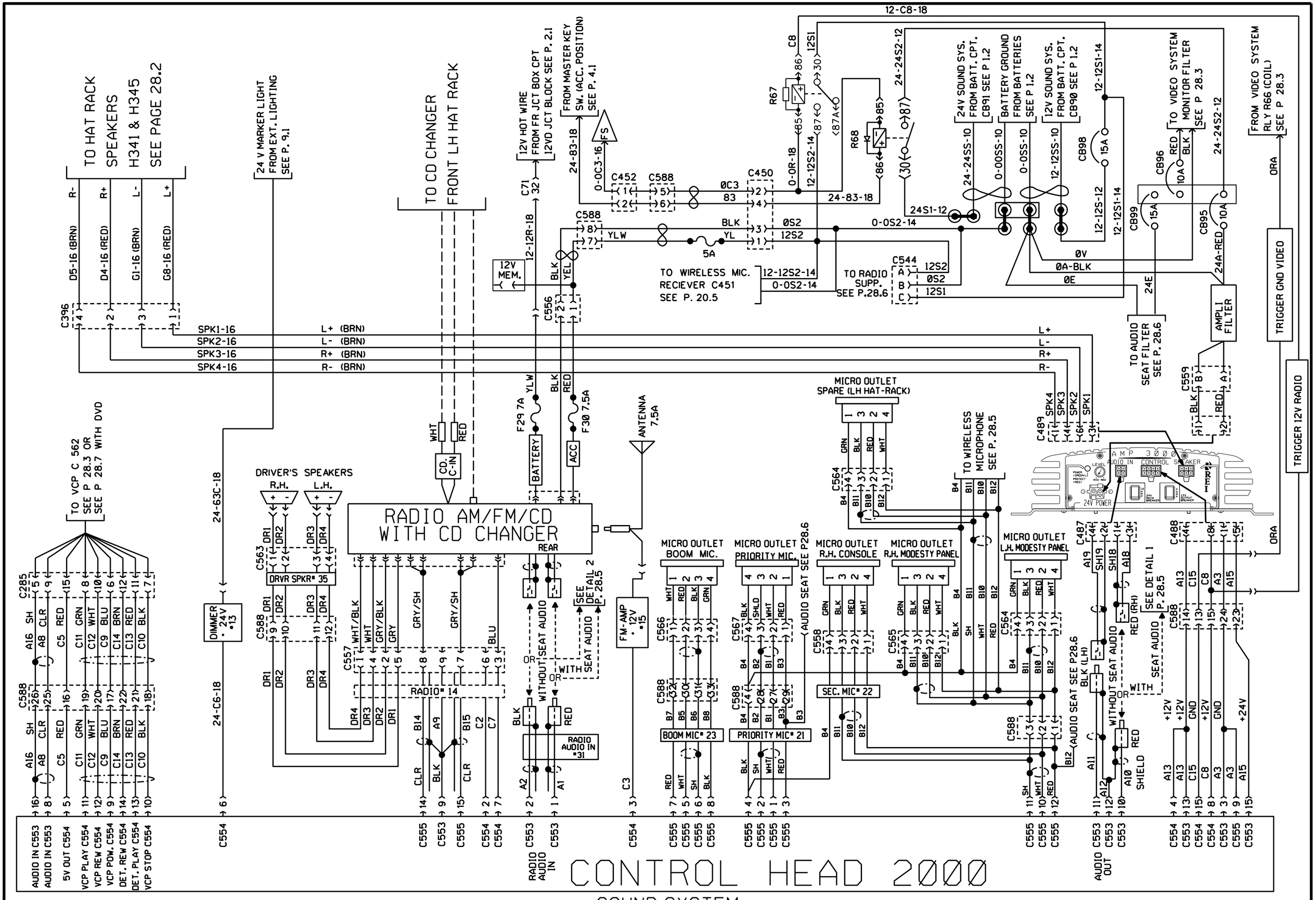

PREVOST	WIRING DIAGRAM	NO: D060993	PAGE: 28.1SP1	REVISION 18

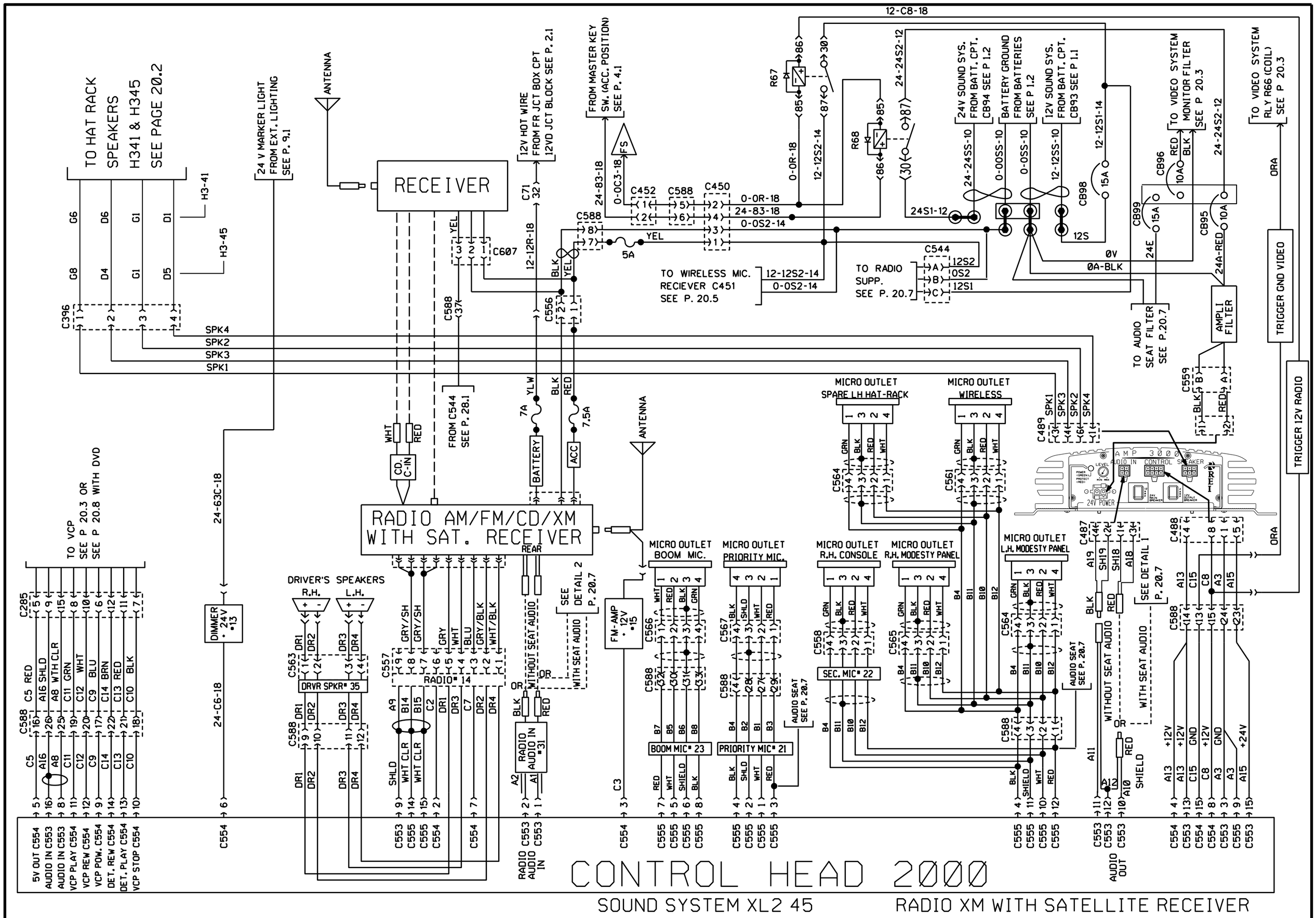

PREVOST	WIRING DIAGRAM	NO: D060993	PAGE: 28.1SP2	REVISION 18

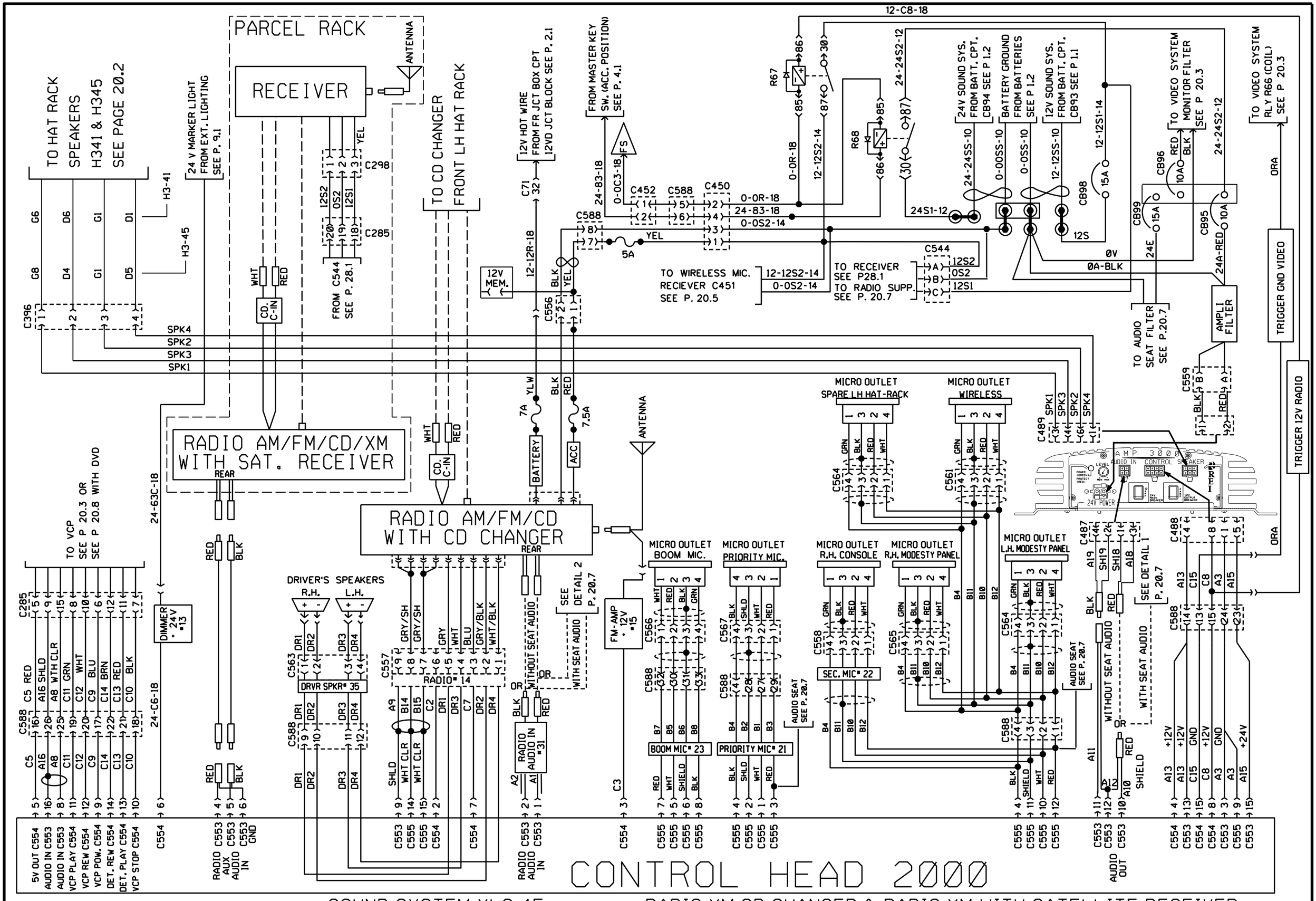

SOUND SYSTEM XL2 45 RADIO XM CD CHANGER & RADIO XM WITH SATELLITE RECEIVER

PREVOST	WIRING DIAGRAM	NO: D060993	PAGE: 28.1SP3	REVISION 18

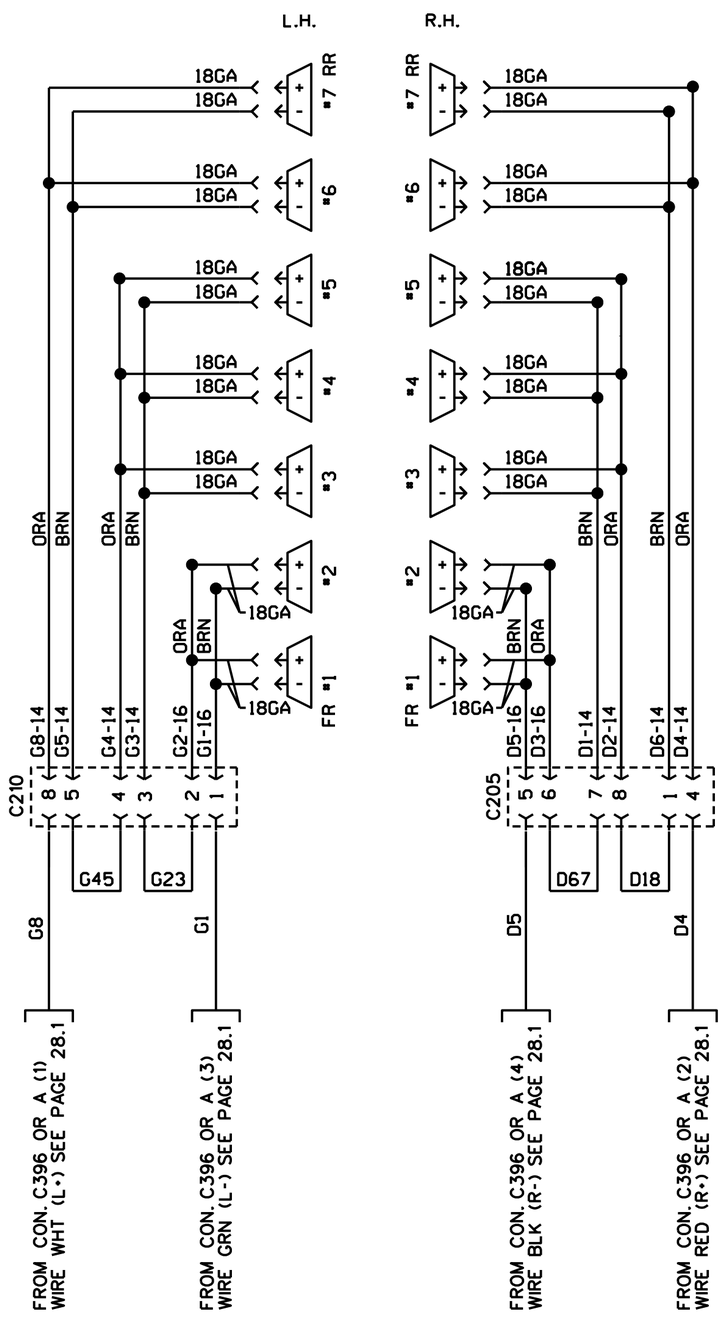

HAT RACK SPEAKERS XL2-45

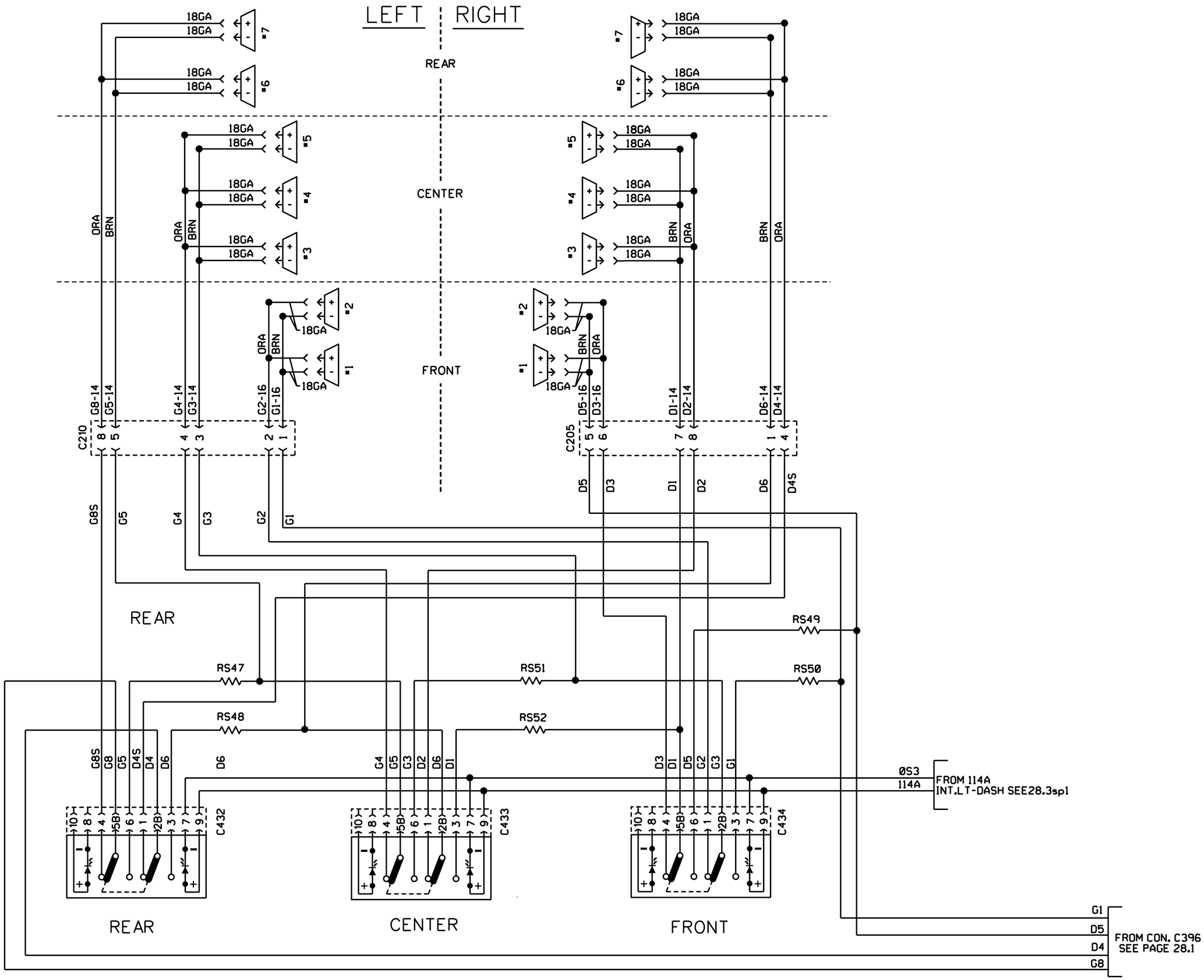

HAT RACK SPEAKERS XL2-45 (CUT-OFF SELECTION) (PRAIRIE BUS LINES)

PREVOST	WIRING DIAGRAM	NO: D060993	PAGE: 28.2sp1	REVISION 11

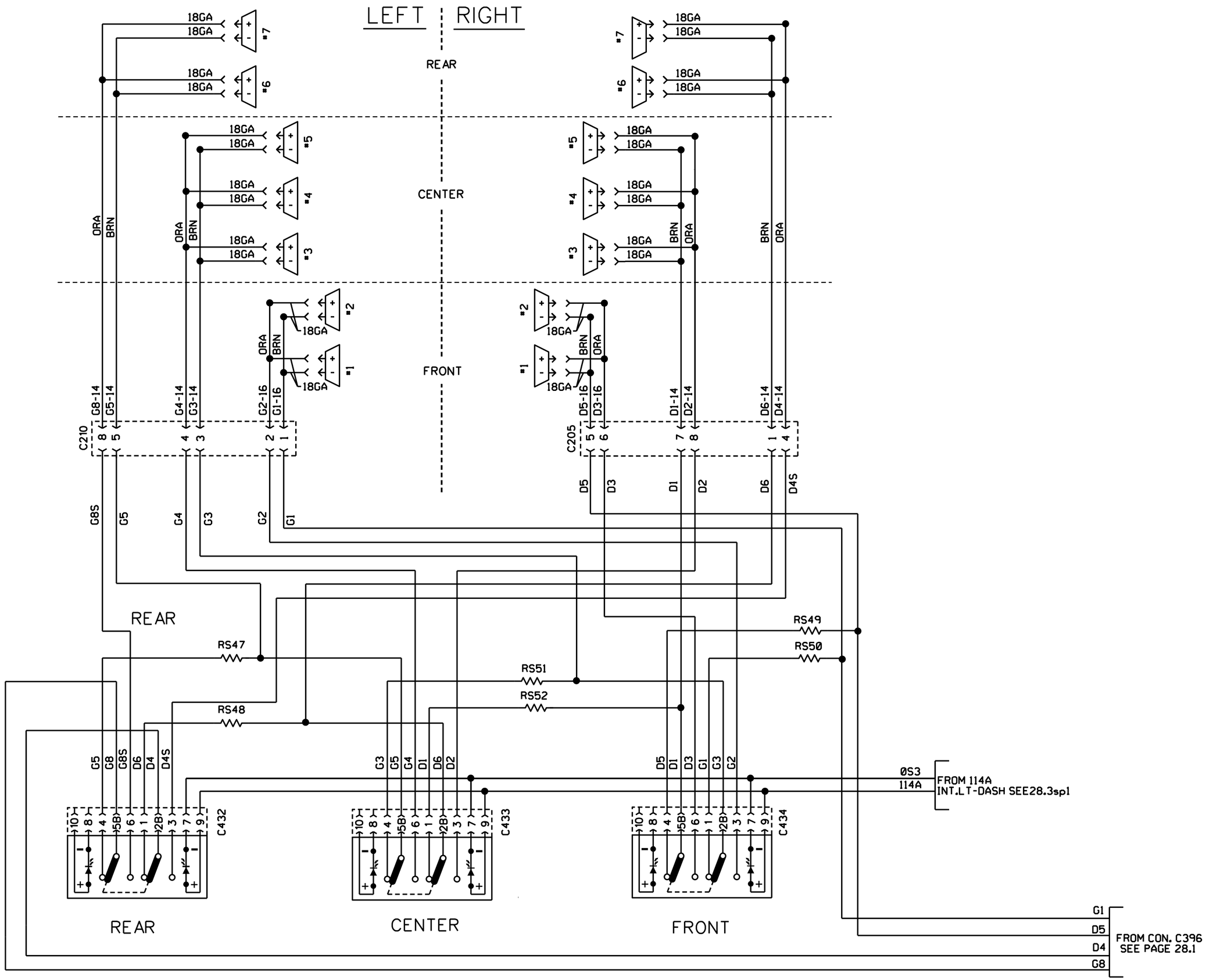

HAT RACK SPEAKERS XL2-45 (CUT-OFF SELECTION) (PRAIRIE BUS LINES)

PREVOST	WIRING DIAGRAM	NO: D060993	PAGE: 28.2sp1	REVISION 13

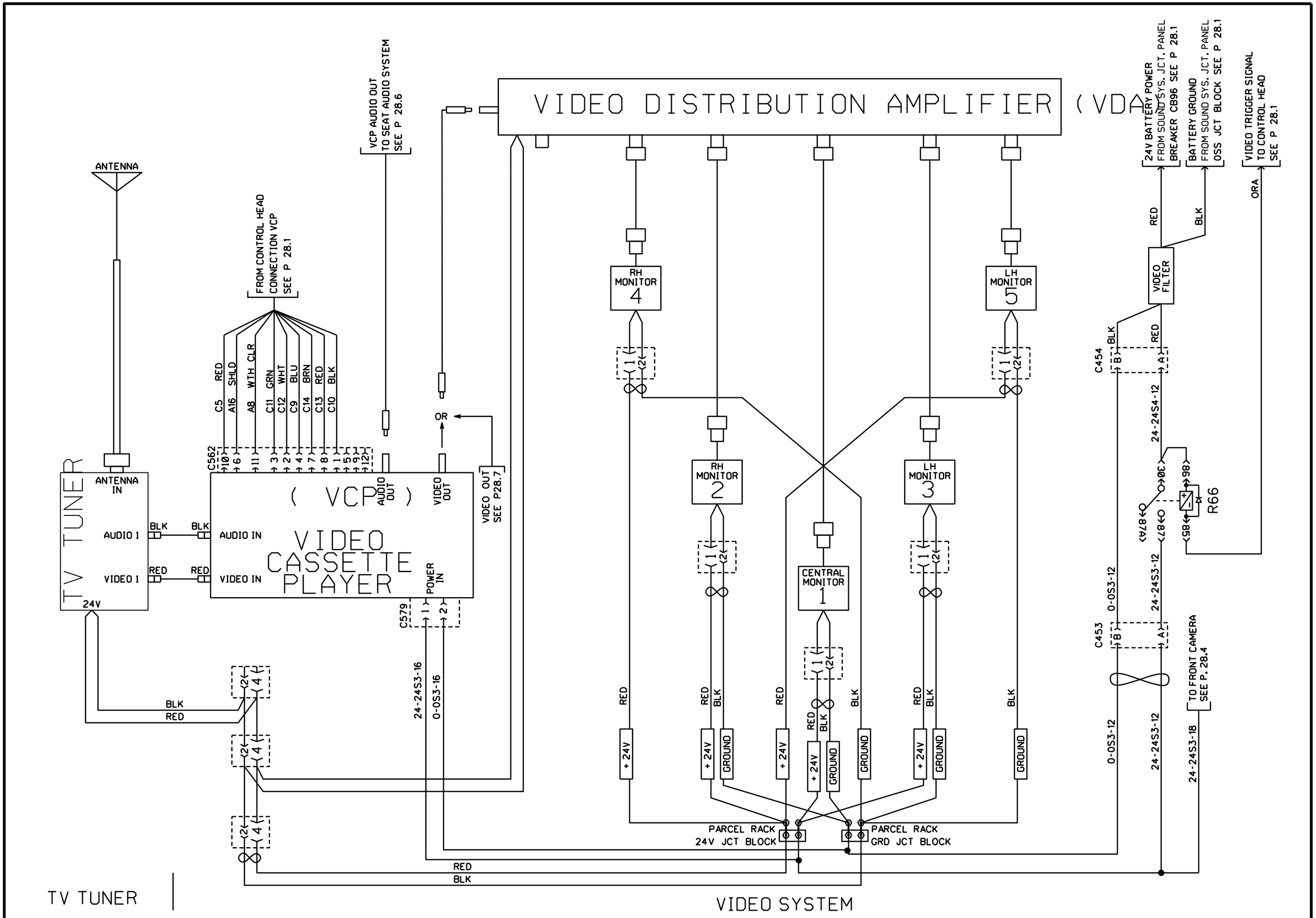

PREVOST	WIRING DIAGRAM	NO: D060993	PAGE: 28.3	REVISION 00

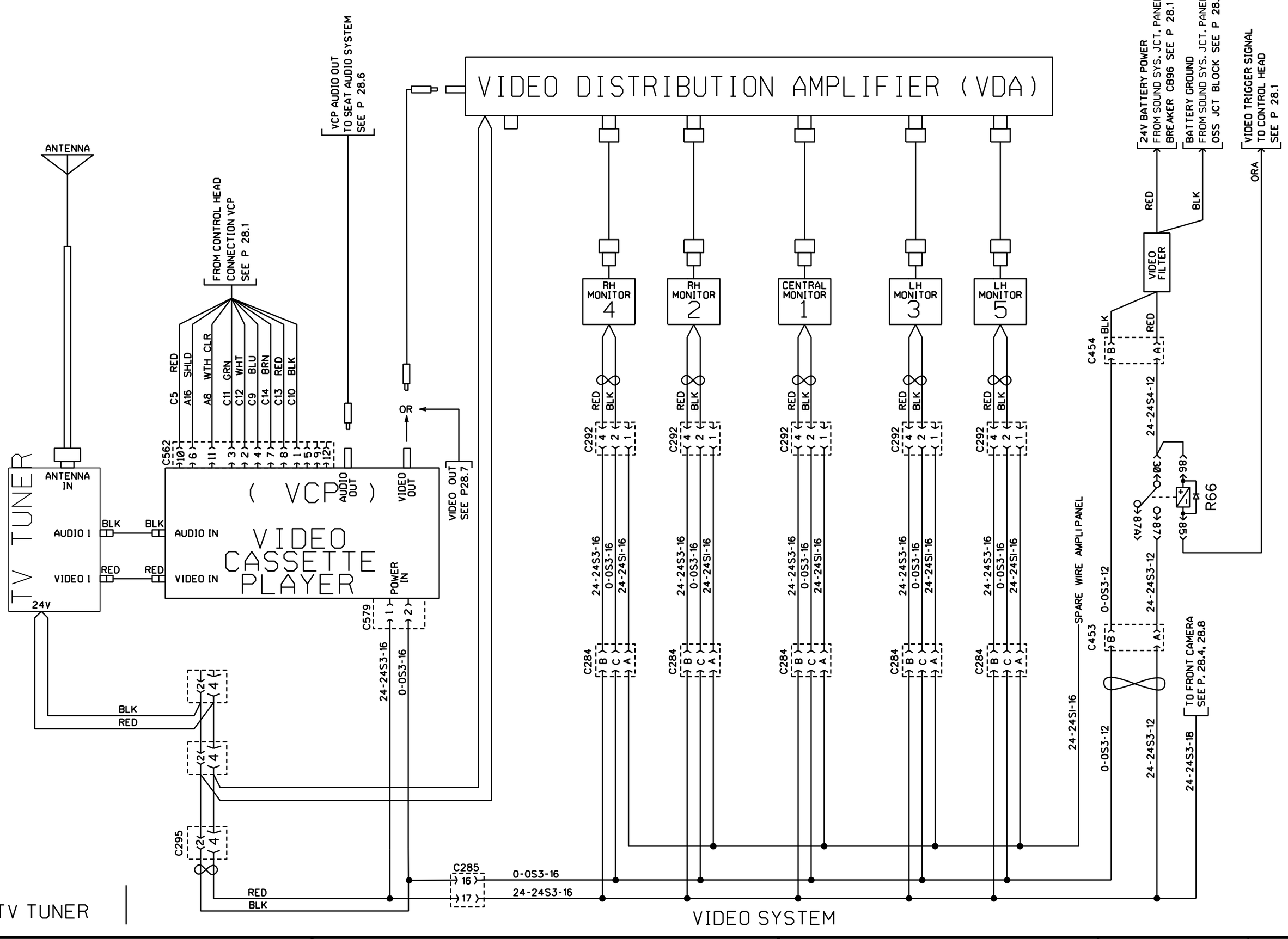

PREVOST	WIRING DIAGRAM	NO: D060993	PAGE: 28.3	REVISION 04

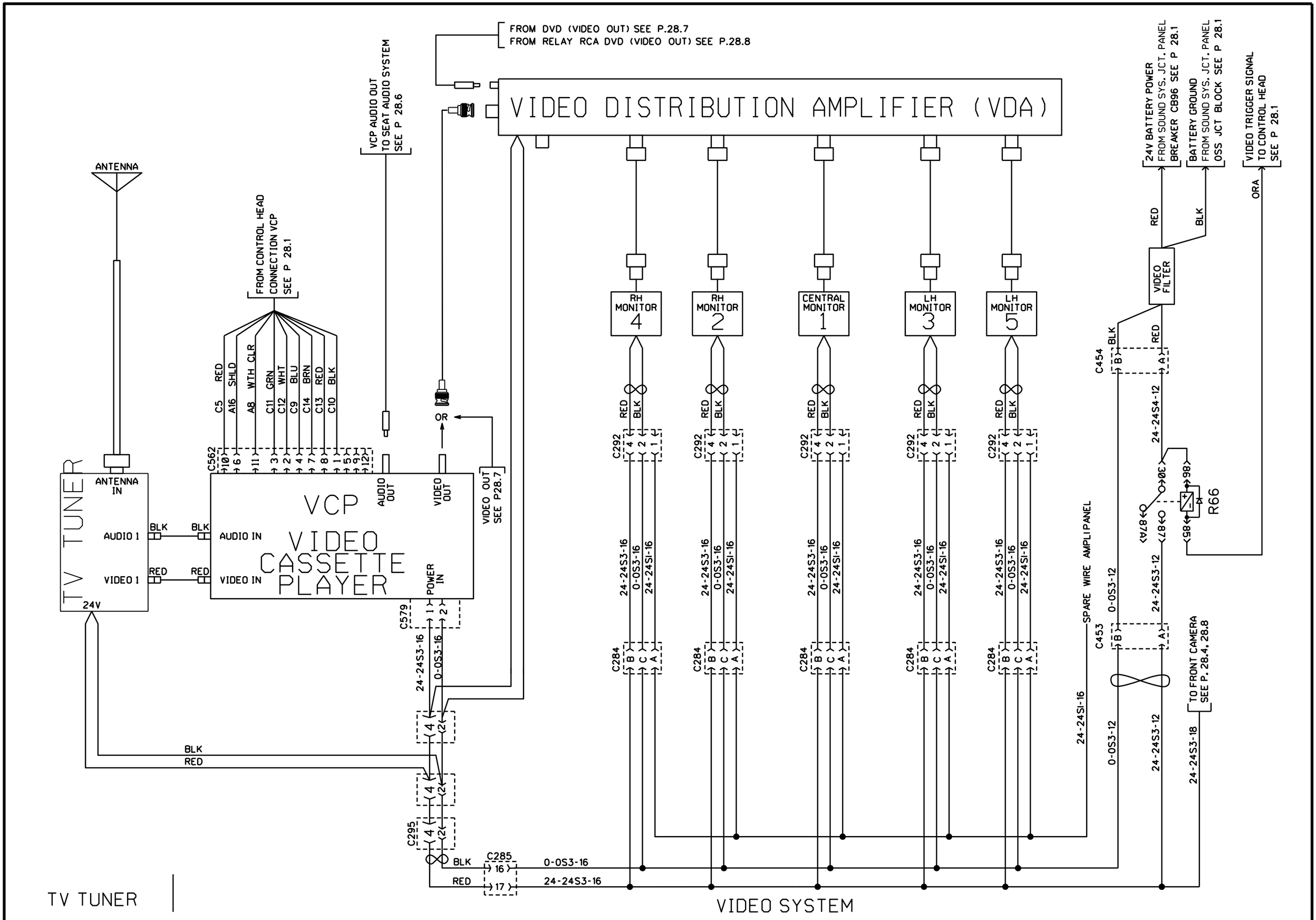

PREVOST	WIRING DIAGRAM	NO: D060993	PAGE: 28.3	REVISION 07

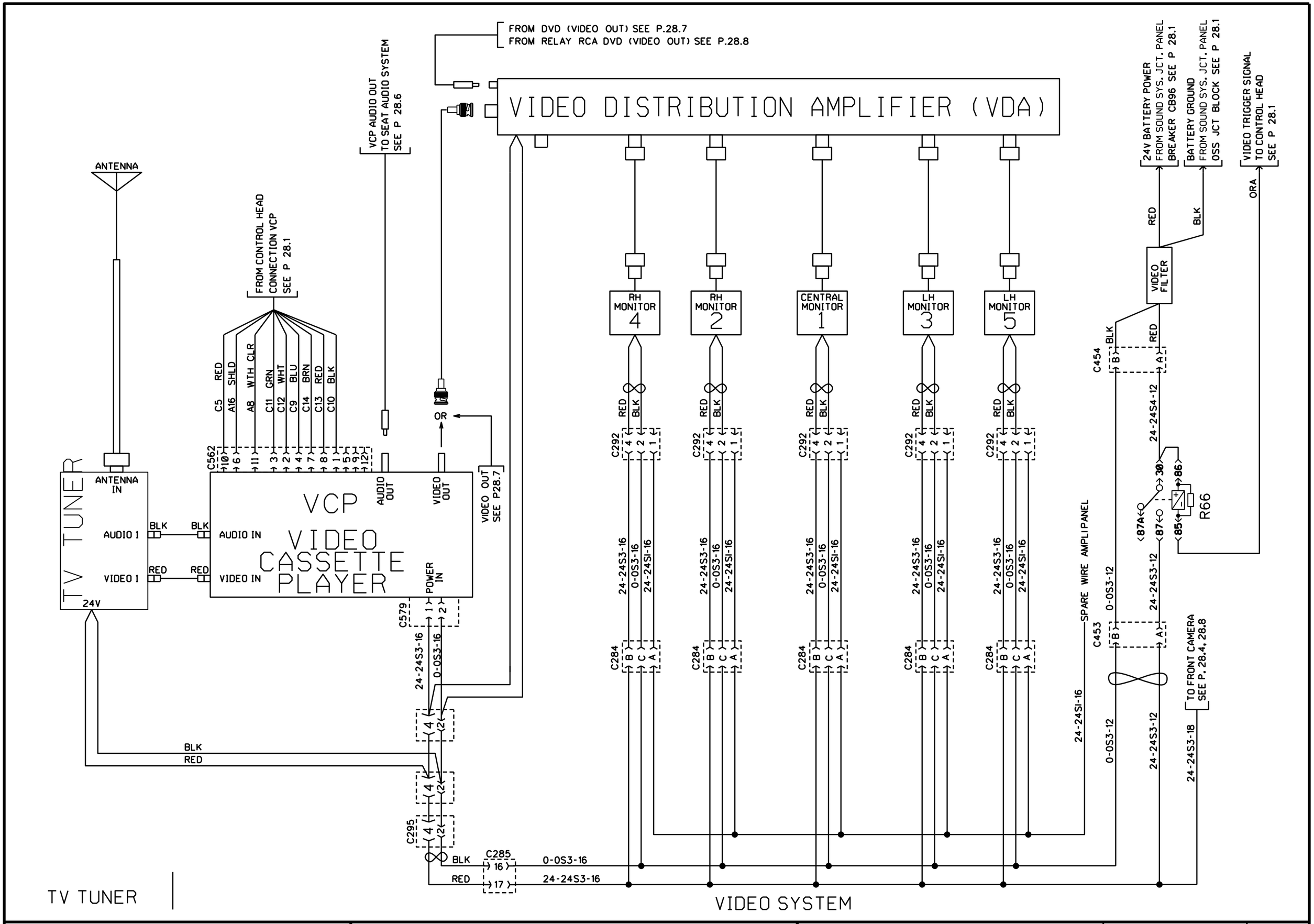
FROM DVD (VIDEO OUT) SEE P.28.7
FROM RELAY RCA DVD (VIDEO OUT) SEE P.28.8
VIDEO DISTRIBUTION AMPLIFIER (VDA)
VCP AUDIO OUT TO SEAT AUDIO SYSTEM SEE P 28.6
ANTENNA
FROM CONTROL HEAD CONNECTION VCP SEE P 28.1
TV TUNER
ANTENNA IN
AUDIO 1
VIDEO 1
24V
VCP
VIDEO CASSETTE PLAYER
AUDIO IN
VIDEO IN
AUDIO OUT
VIDEO OUT
POWER IN
VIDEO OUT SEE P28.7
OR
RH MONITOR 4
RH MONITOR 2
CENTRAL MONITOR 1
LH MONITOR 3
LH MONITOR 5
24V BATTERY POWER FROM SOUND SYS. JCT. PANEL BREAKER CB96 SEE P 28.1
BATTERY GROUND FROM SOUND SYS. JCT. PANEL OSS JCT BLOCK SEE P 28.1
VIDEO TRIGGER SIGNAL TO CONTROL HEAD SEE P 28.1
VIDEO FILTER
R66
SPARE WIRE AMPLIPANEL
TO FRONT CAMERA SEE P. 28.4, 28.8
VIDEO SYSTEM
TV TUNER

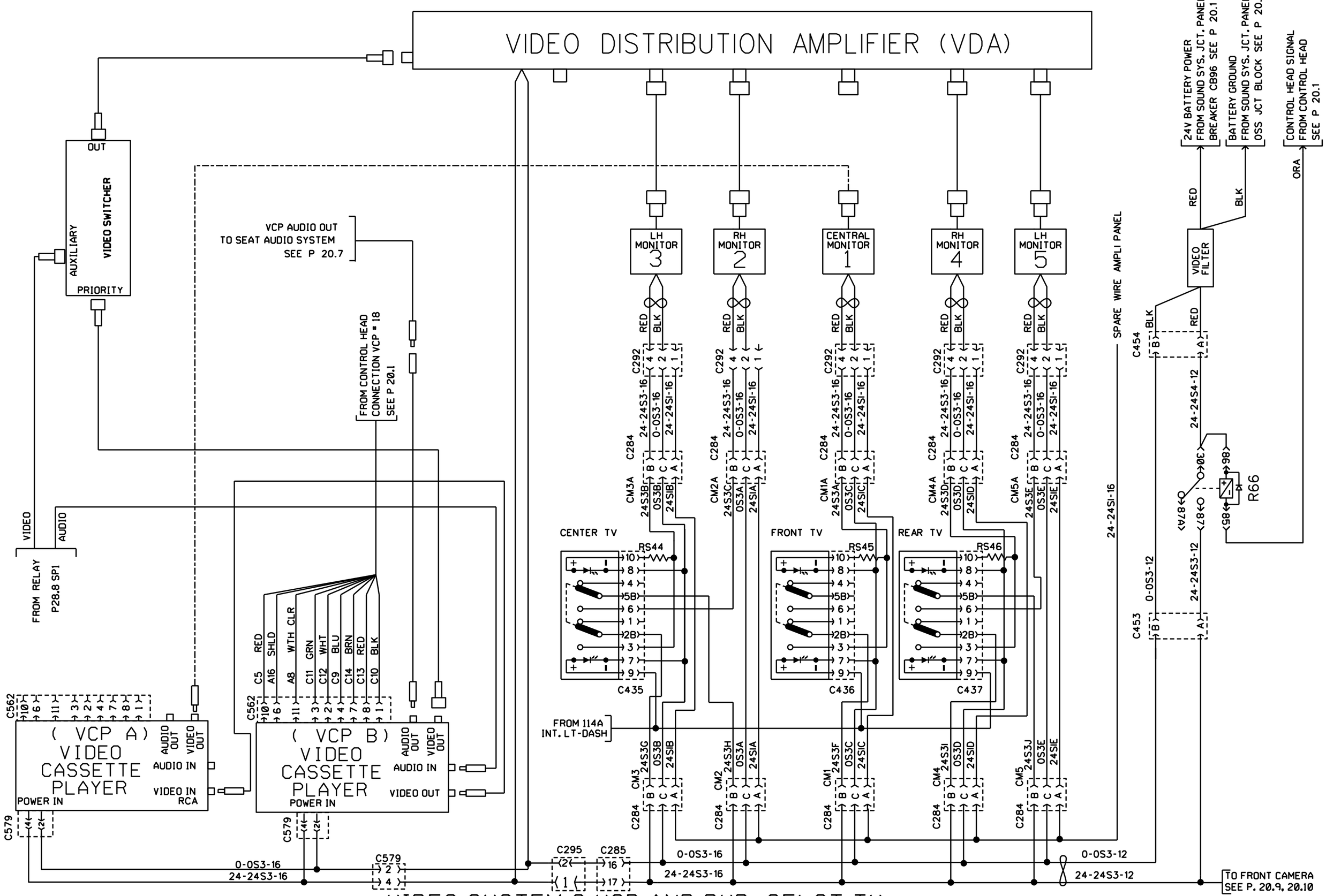

VIDEO SYSTEM 2 VCP AND DVD, SELCT TV

PREVOST	WIRING DIAGRAM	NO: D060993	PAGE: 28.3 SP1	REVISION 11

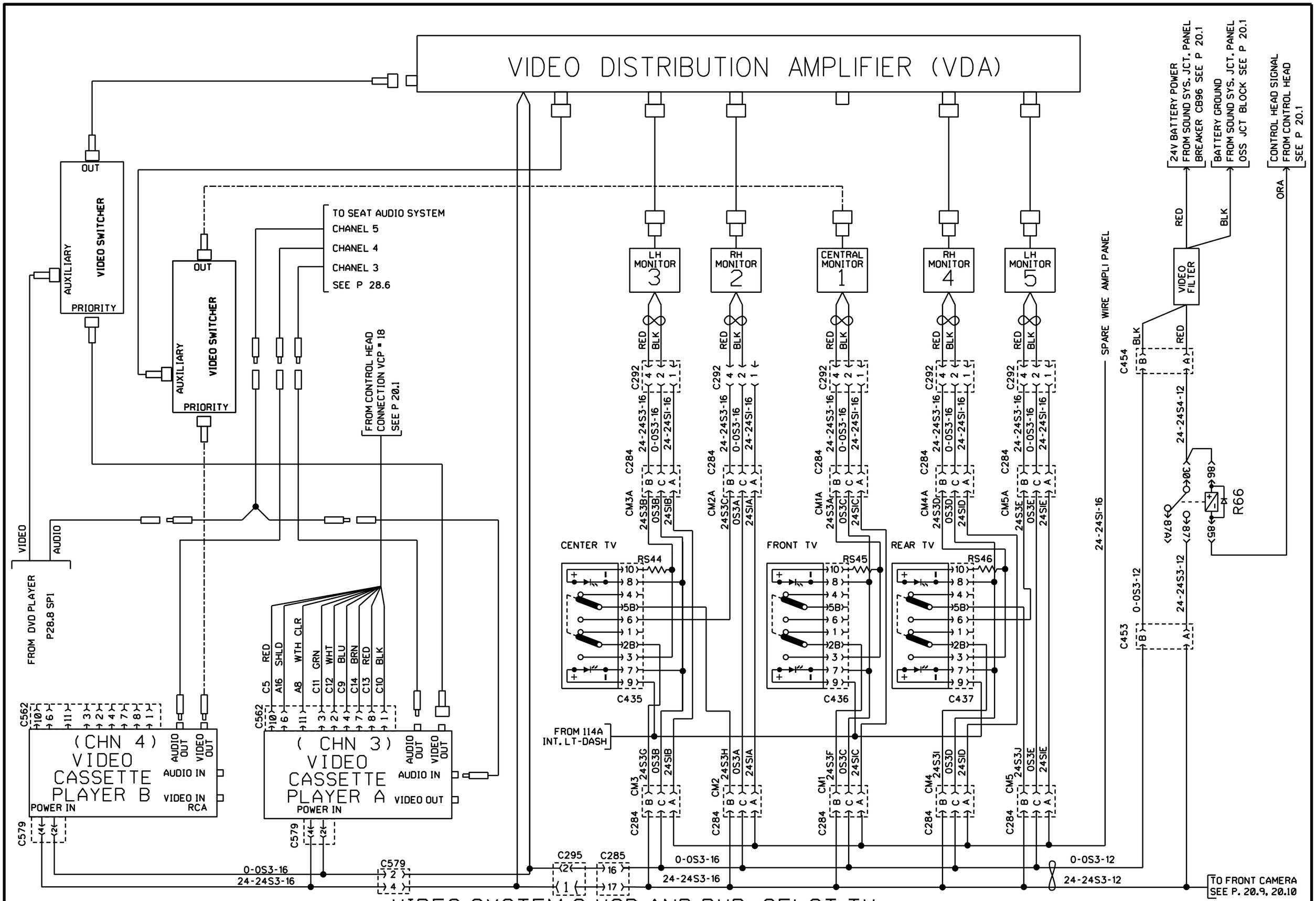

VIDEO SYSTEM 2 VCP AND DVD, SELCT TV

PREVOST	WIRING DIAGRAM	NO: D060993	PAGE: 28.3 SP1	REVISION 13

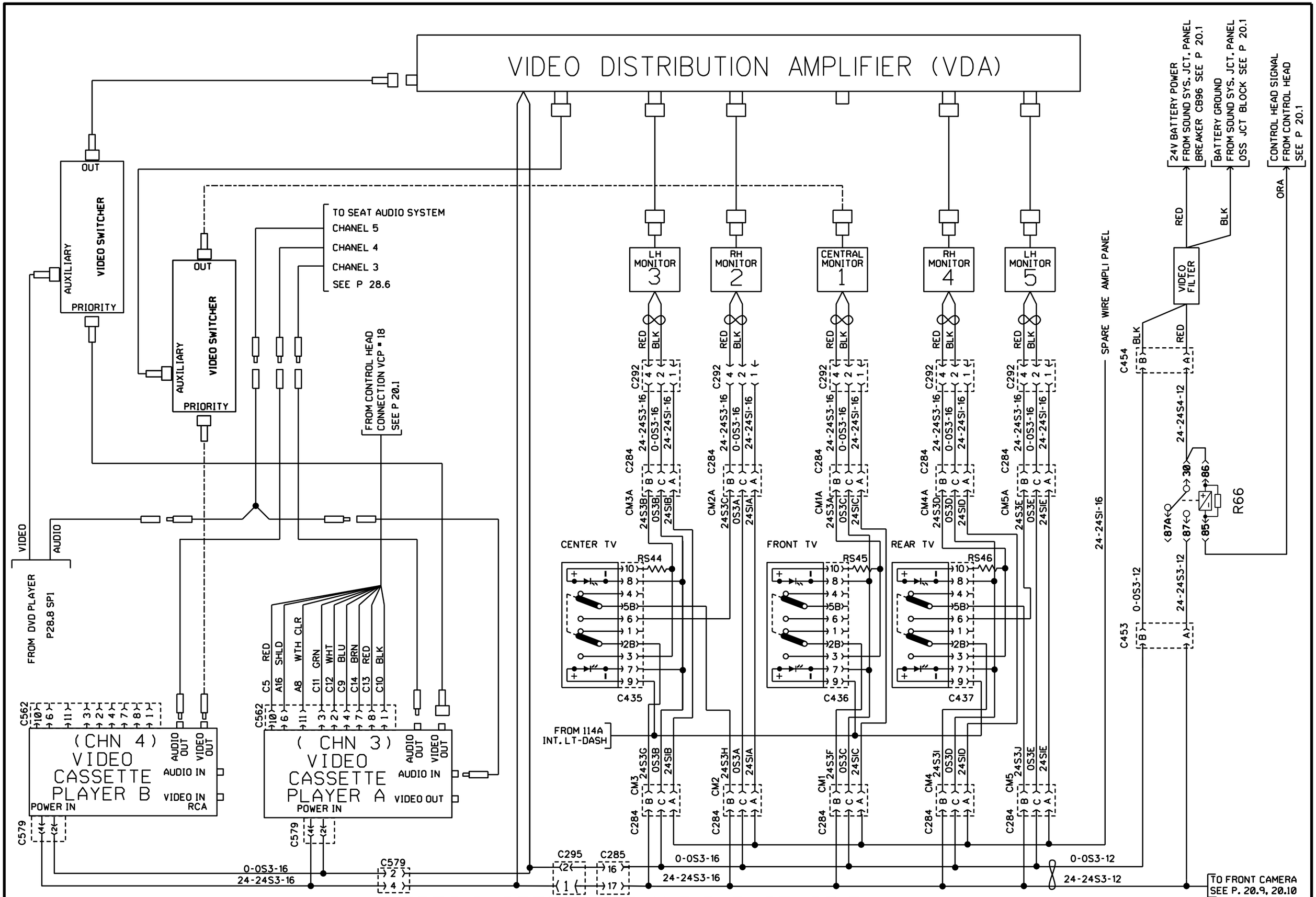

VIDEO SYSTEM 2 VCP AND DVD, SELCT TV

PREVOST	WIRING DIAGRAM	NO: D060993	PAGE: 28.3 SP1	REVISION 15

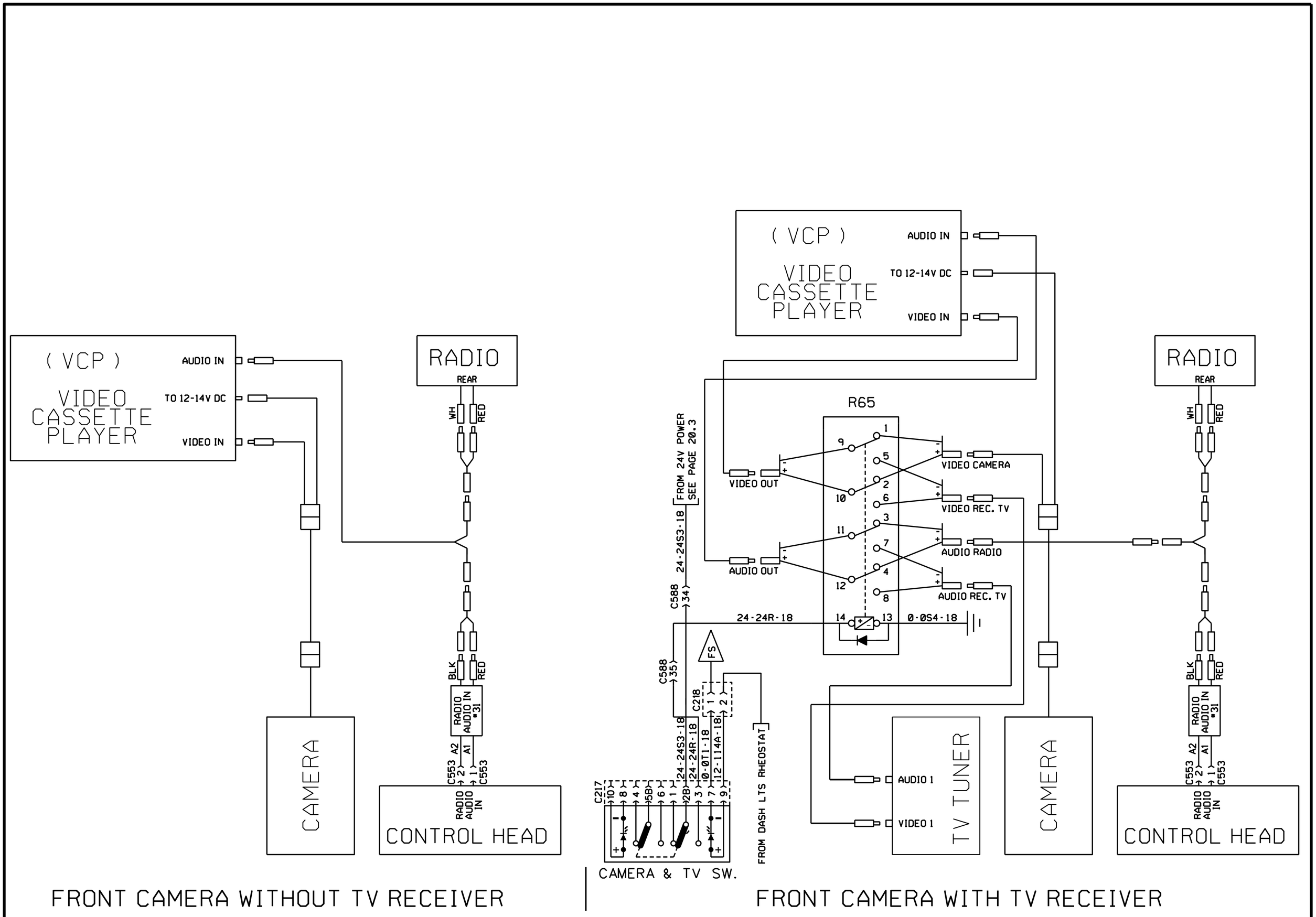

FRONT CAMERA WITHOUT TV RECEIVER

FRONT CAMERA WITH TV RECEIVER

PREVOST	WIRING DIAGRAM	NO: D060993	PAGE: 28.4	REVISION 00

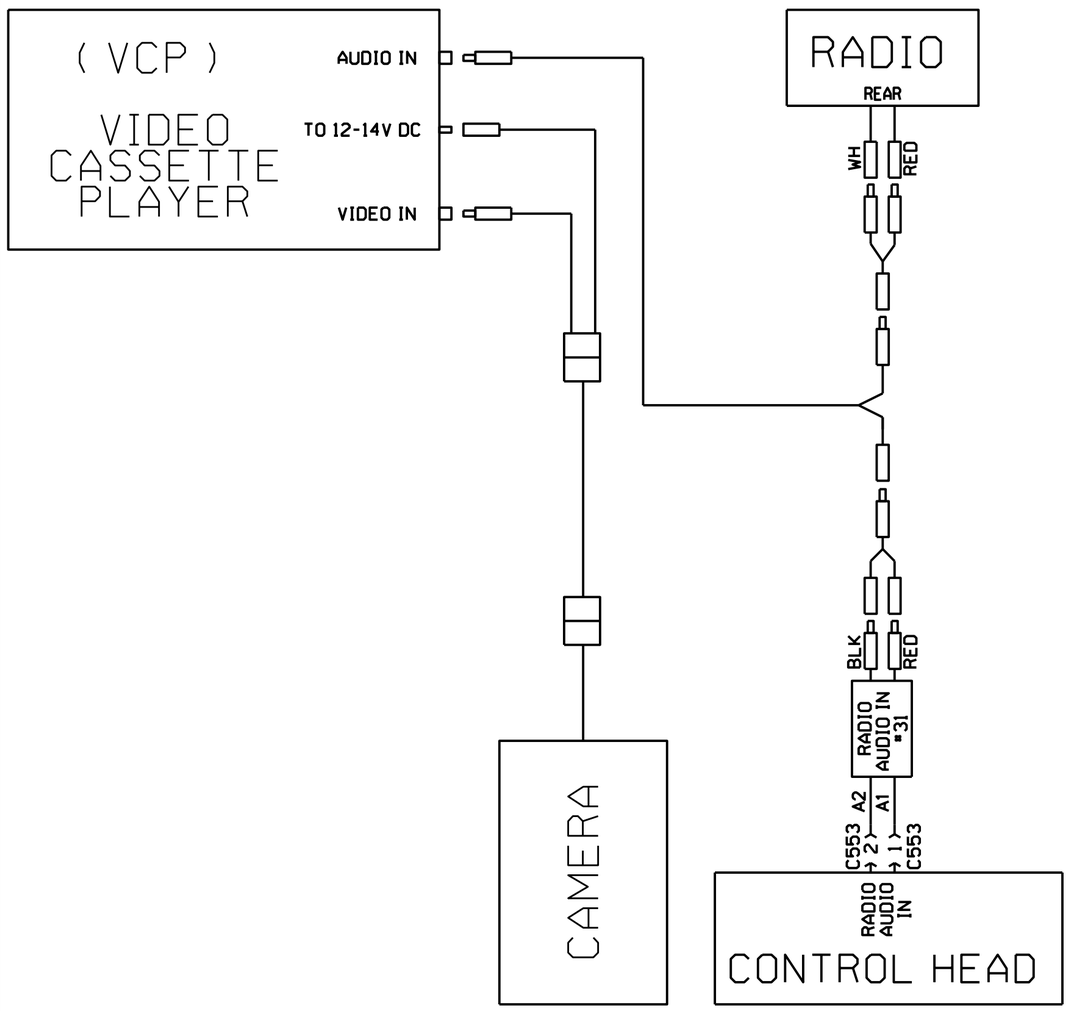

FRONT CAMERA WITHOUT TV RECEIVER

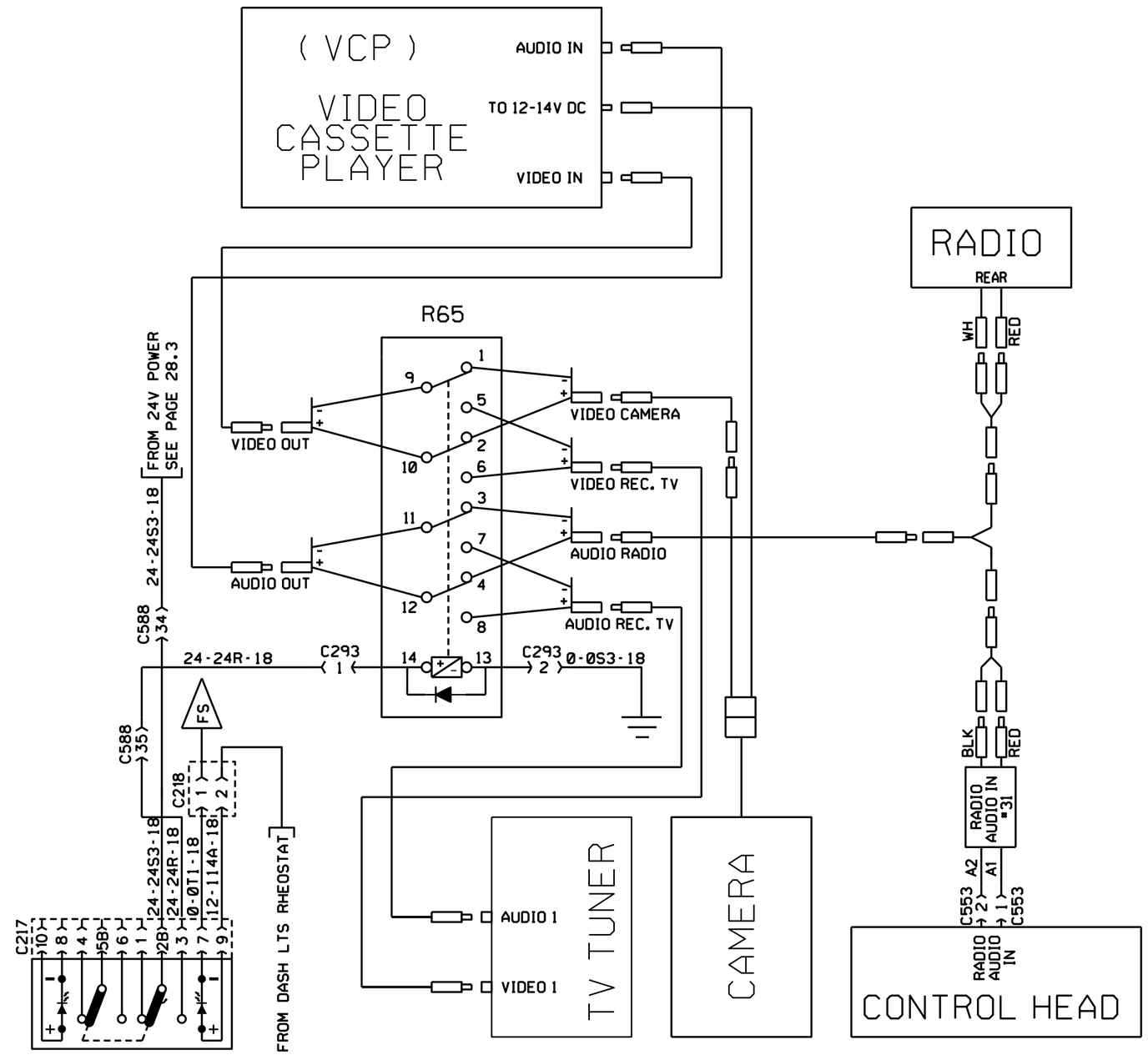

VCP, FRONT CAMERA WITH TV RECEIVER

PREVOST	WIRING DIAGRAM	NO: D060993	PAGE: 28.4	REVISION 04

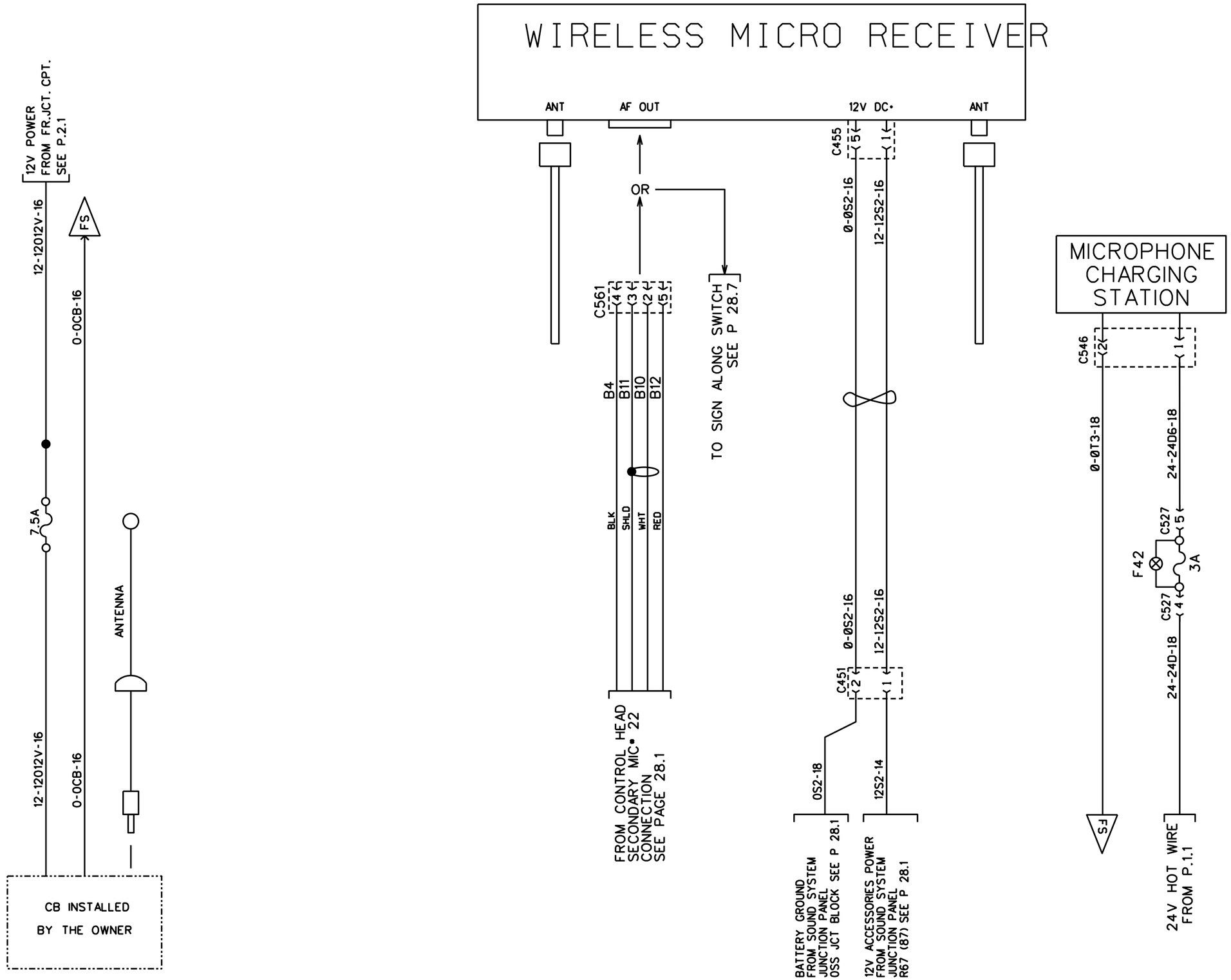

CB OPTION

WIRELESS MICROPHONE

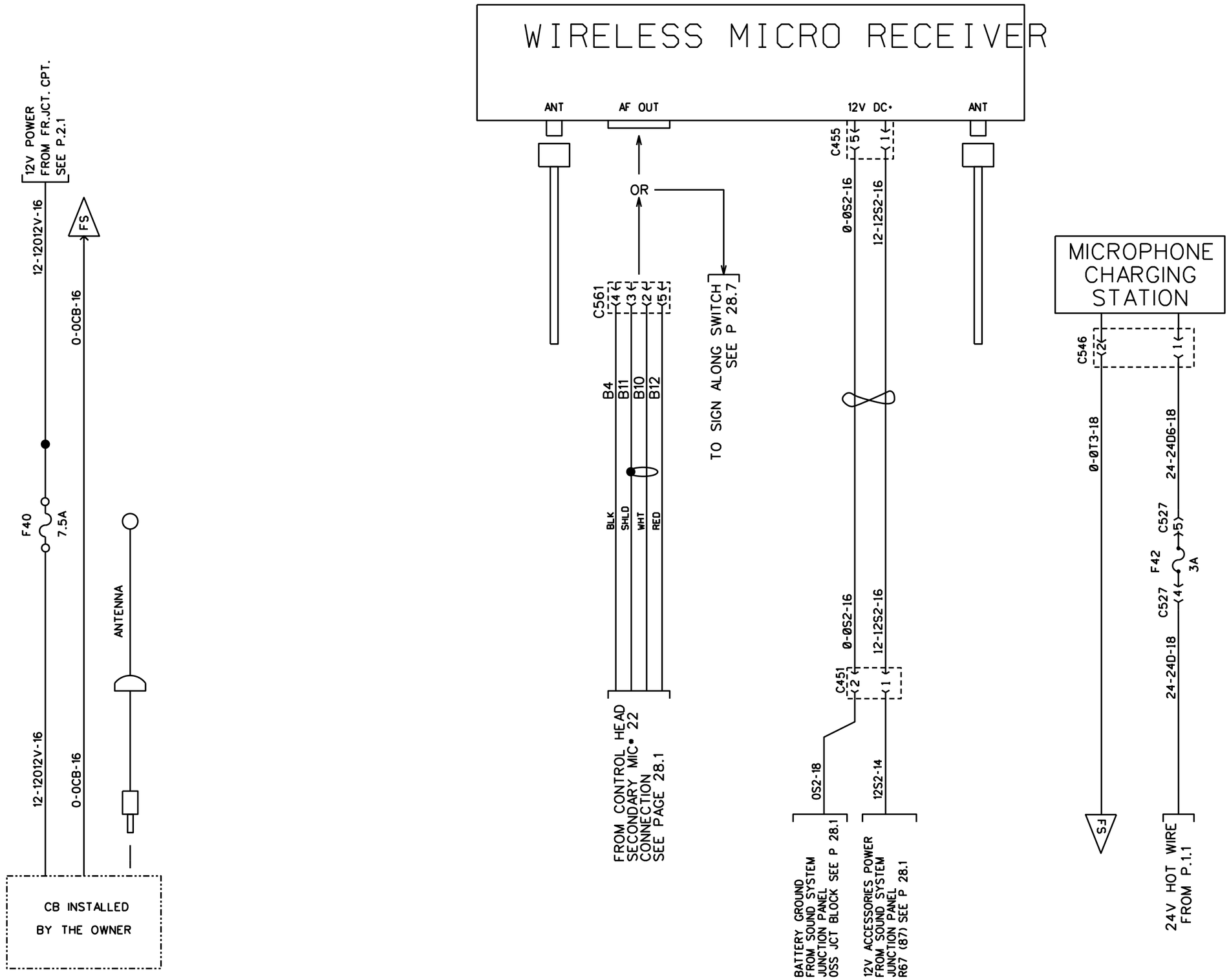

CB OPTION

WIRELESS MICROPHONE

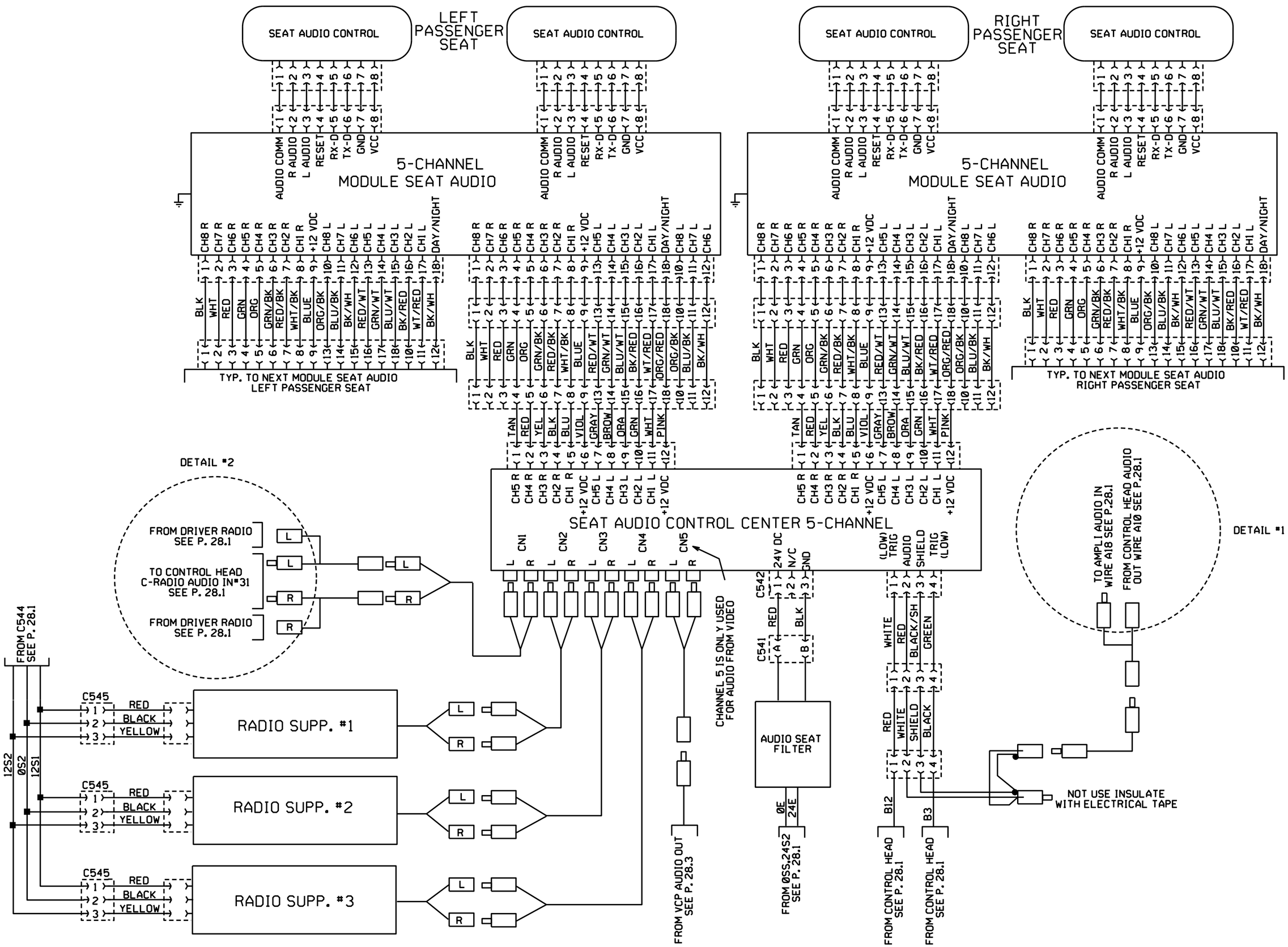

5-CHANNEL SLIM-LINE SEAT AUDIO SYSTEM

PREVOST	WIRING DIAGRAM	NO: D060993	PAGE: 28.6	REVISION 00

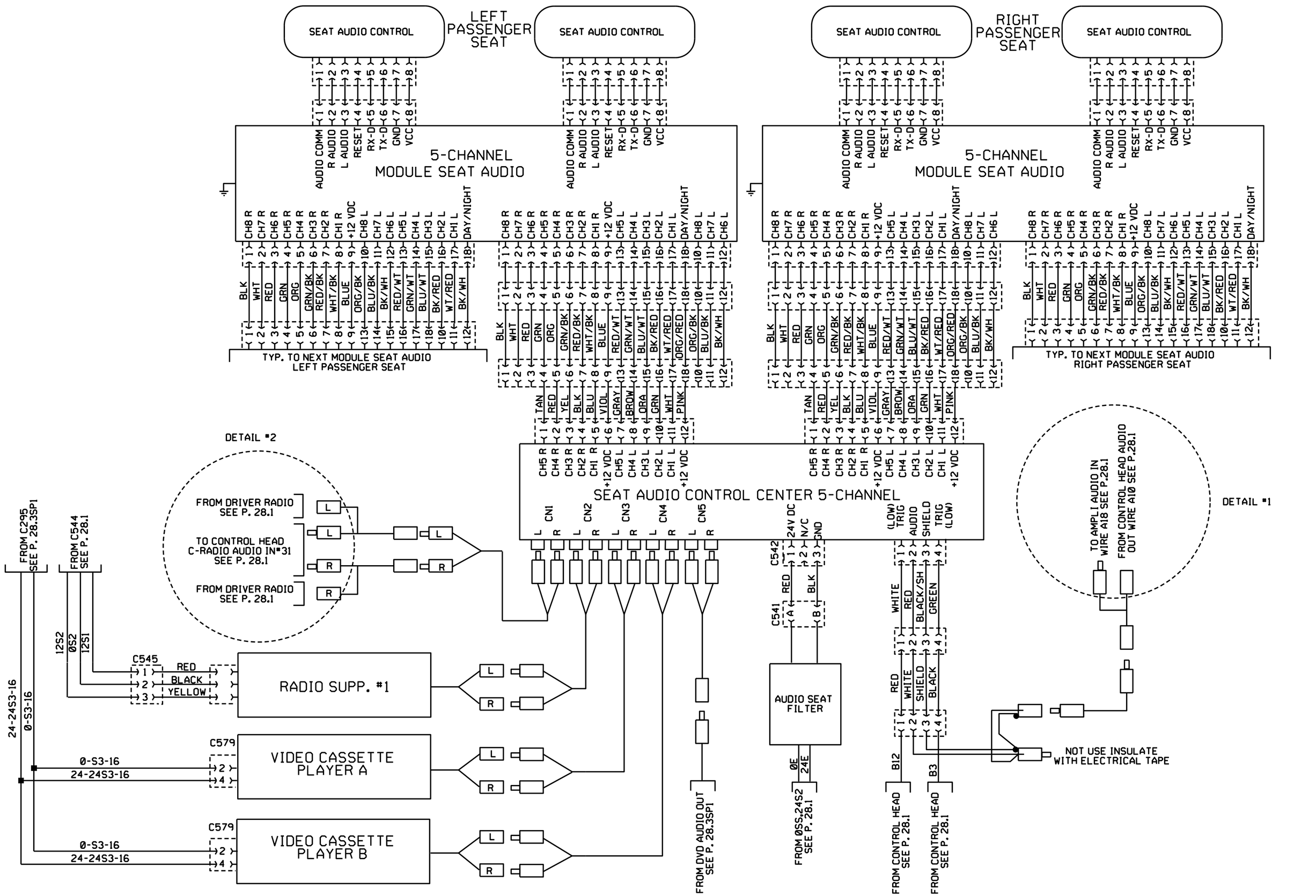

5-CHANNEL SLIM-LINE SEAT AUDIO SYSTEM

(PRAIRIE BUS LINES)

PREVOST	WIRING DIAGRAM	NO: D060993	PAGE: 28.6 SP1	REVISION 13

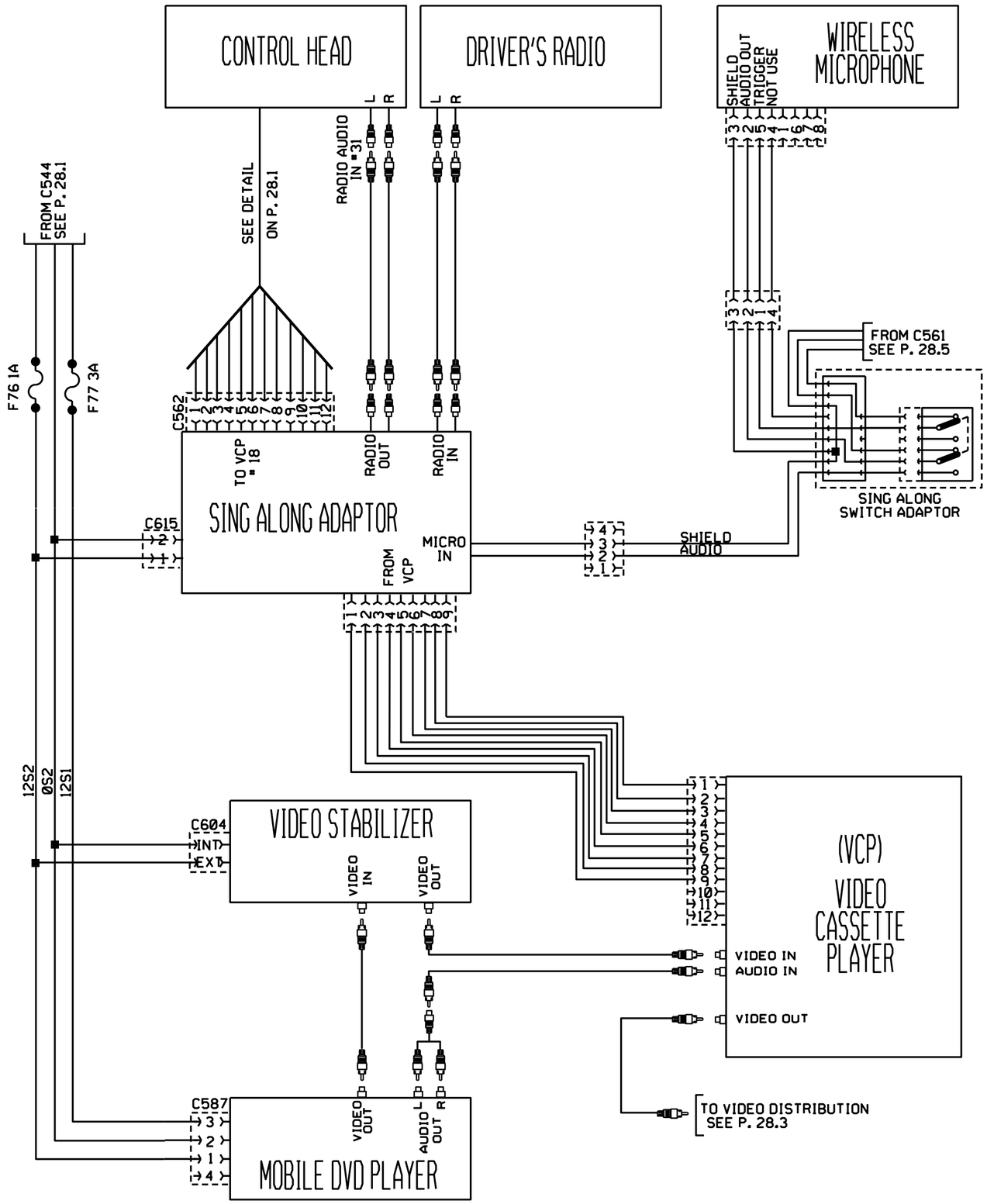

VCP AND DVD WITH KARAOKE

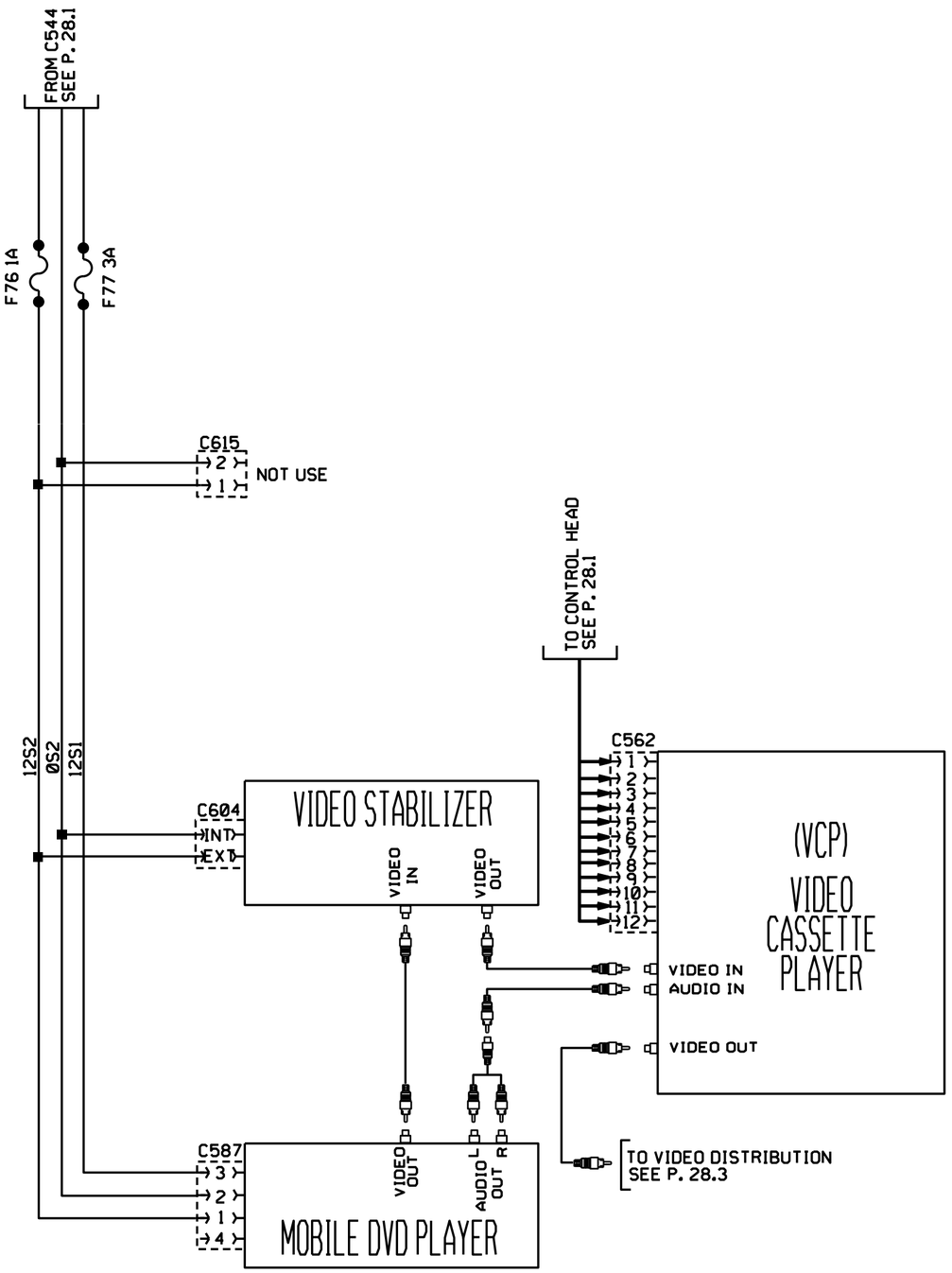

VCP AND DVD

PREVOST	WIRING DIAGRAM	NO: D060993	PAGE: 28.7	REVISION 00

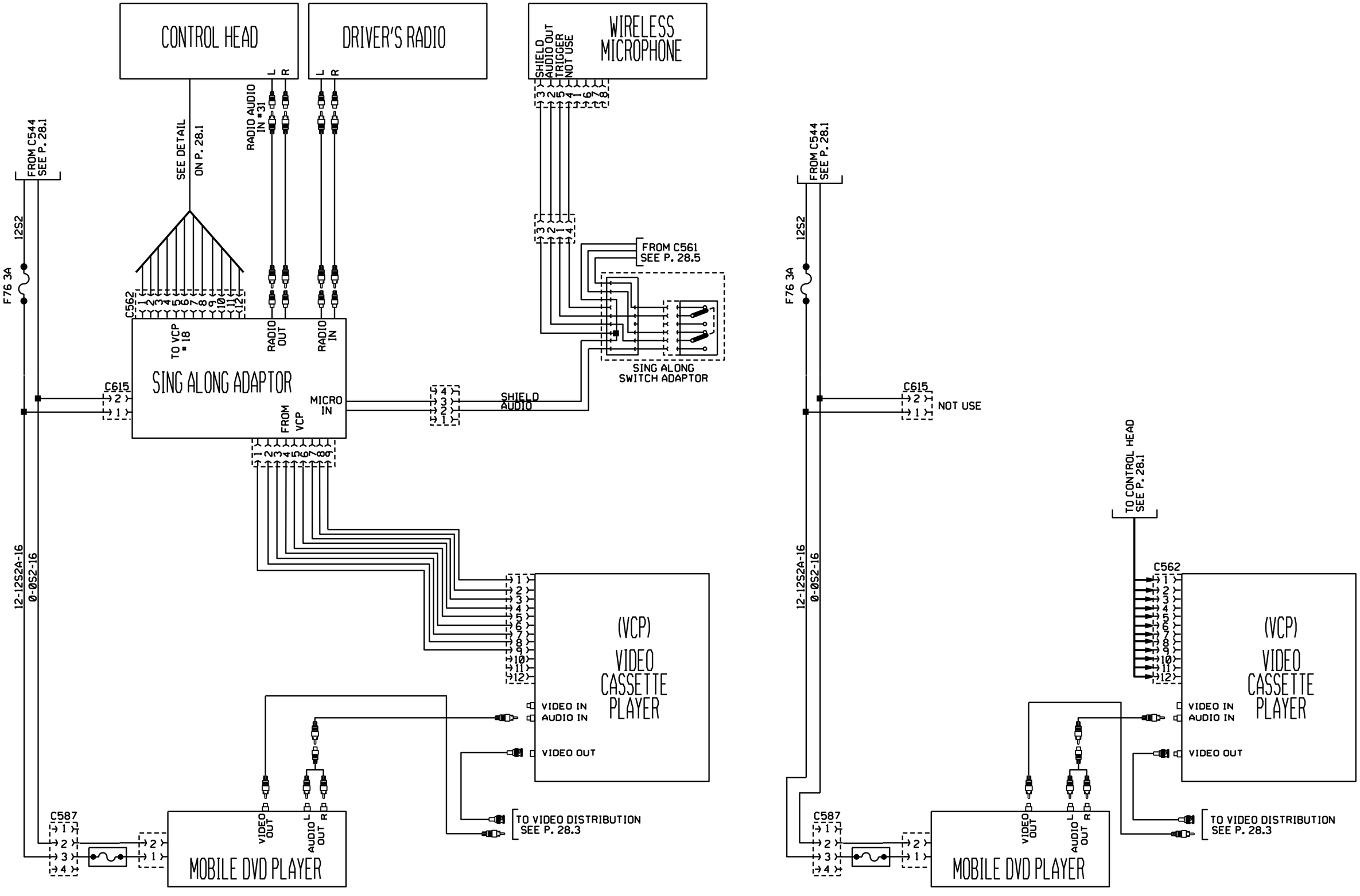

VCP AND DVD WITH KARAOKE

VCP AND DVD

PREVOST	WIRING DIAGRAM	NO: D060993	PAGE: 28.7	REVISION 06

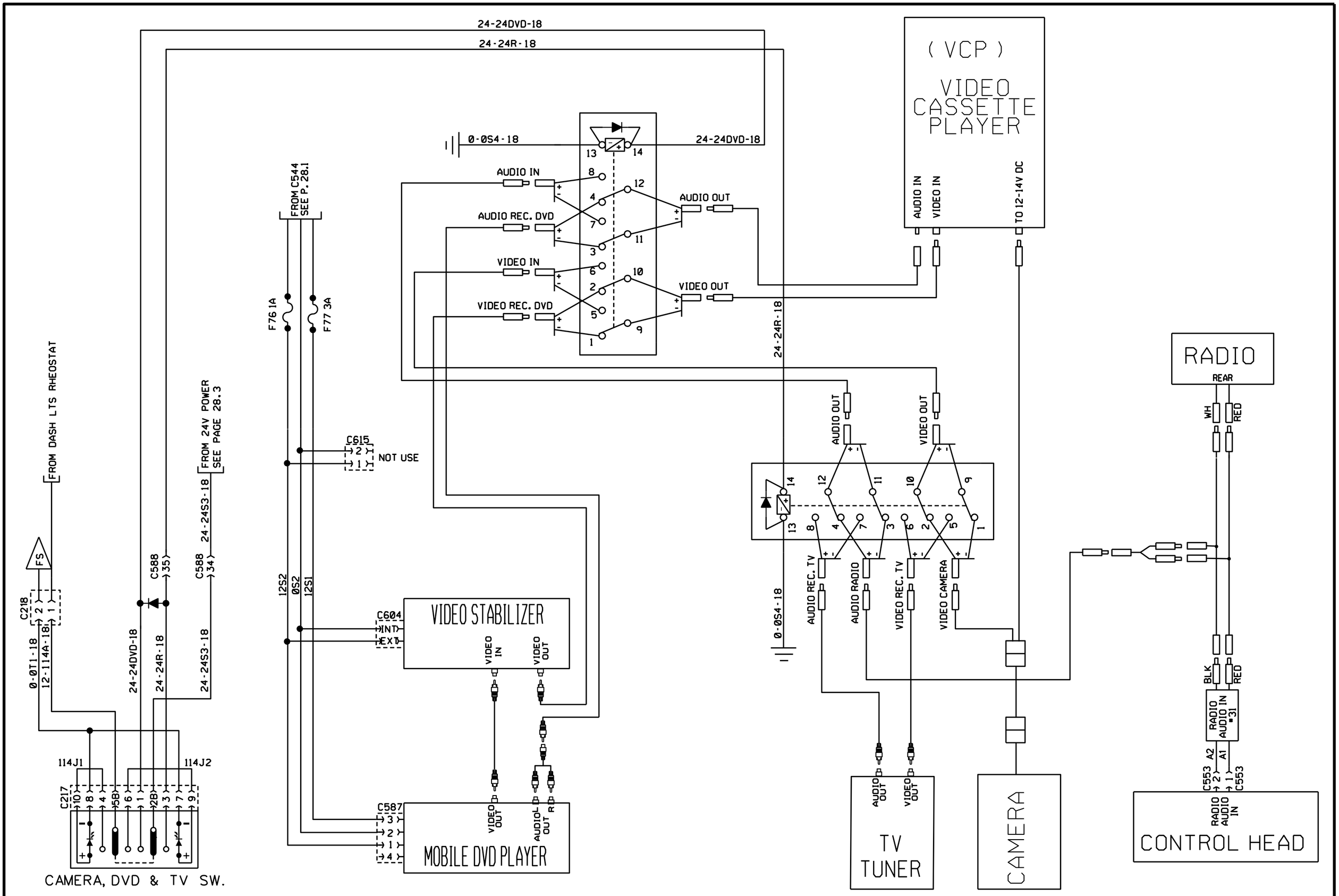

VCP, DVD, FRONT CAMERA AND TV RECEIVER

PREVOST	WIRING DIAGRAM	NO: D060993	PAGE: 28.8	REVISION 00

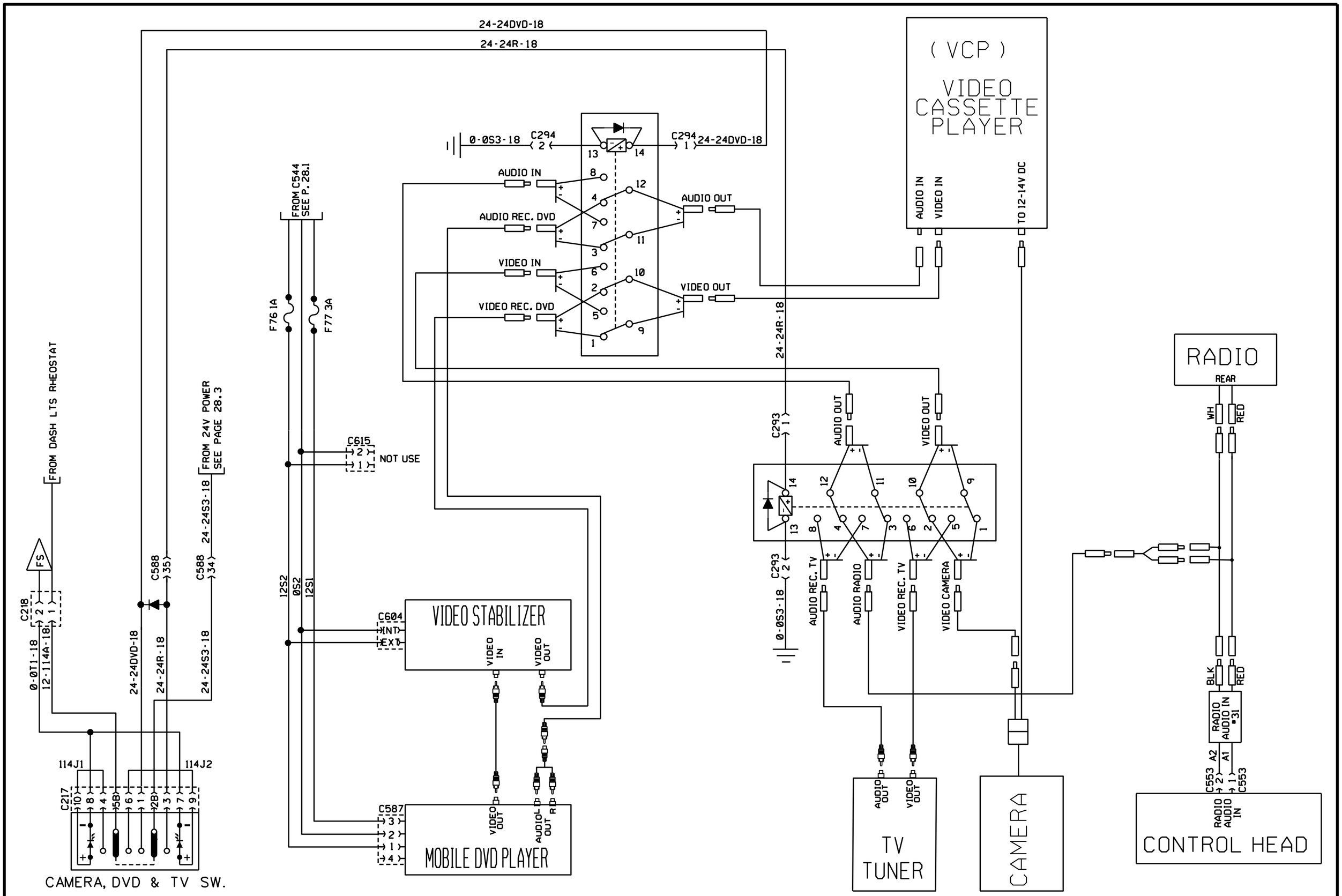

VCP, DVD, FRONT CAMERA AND TV RECEIVER

PREVOST	WIRING DIAGRAM	NO: D060993	PAGE: 28.8	REVISION 04

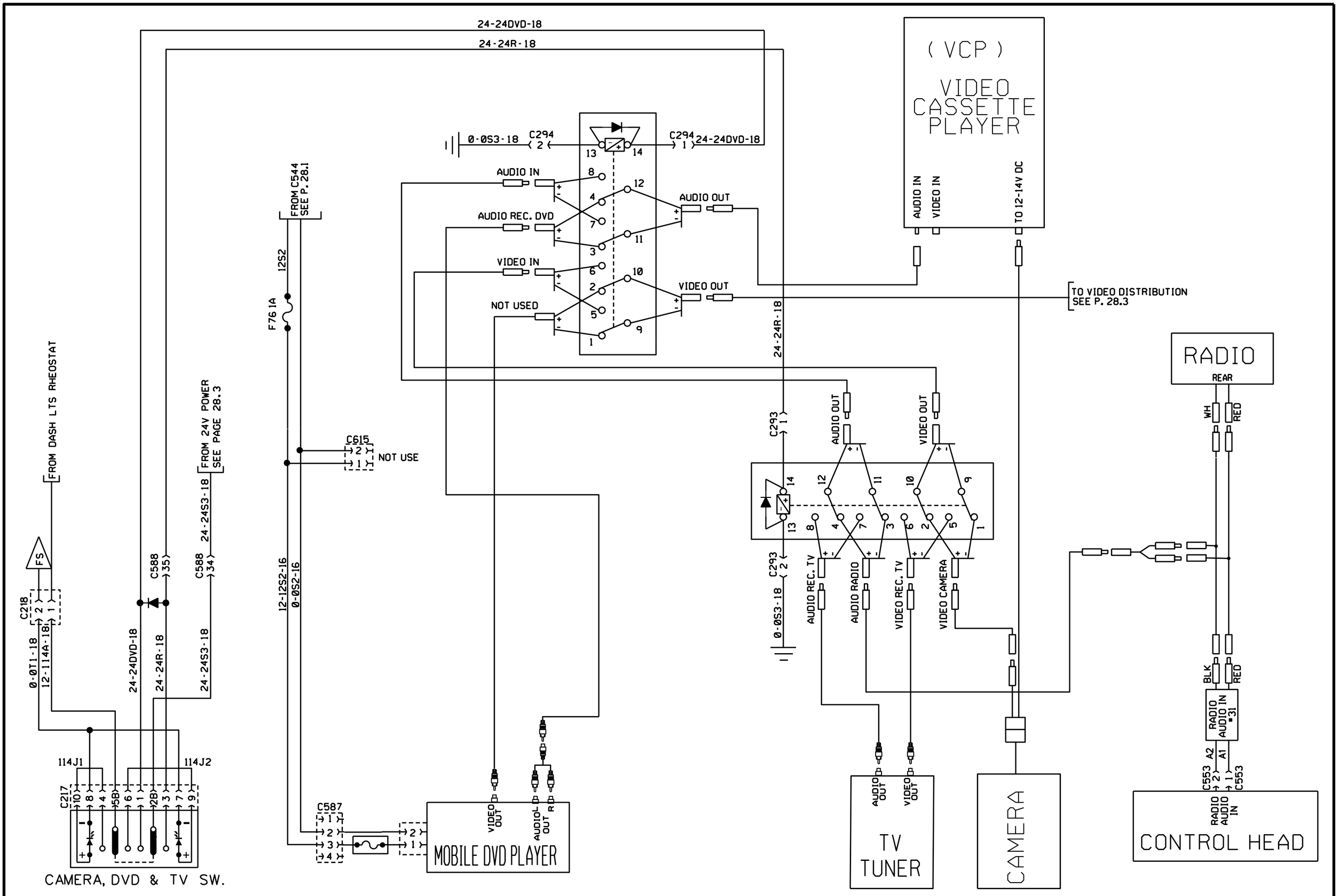

VCP, DVD, FRONT CAMERA AND TV RECEIVER

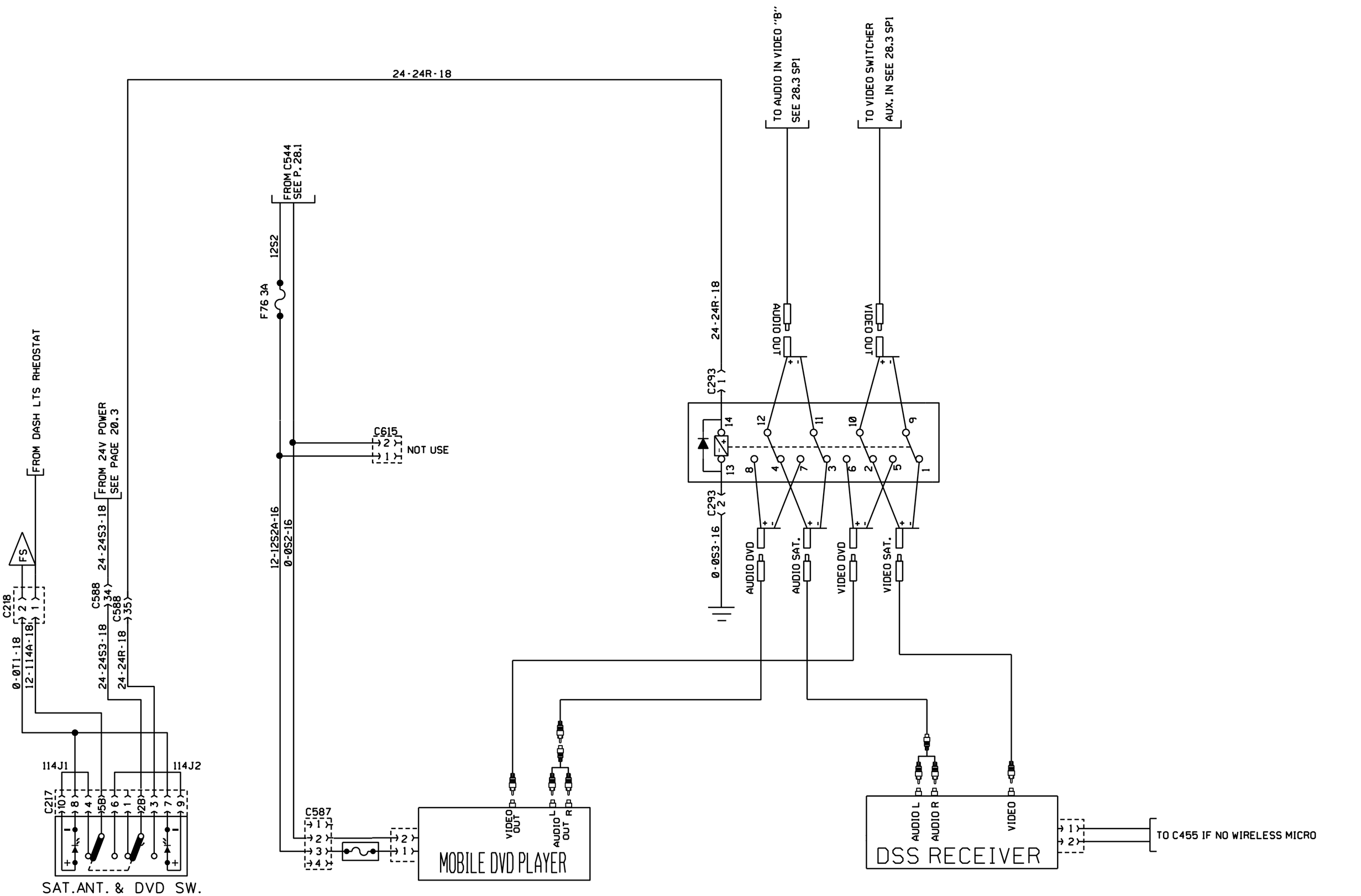

VCP, SAT.ANTENNA AND DVD

(PRAIRIE BUS LINES)

PREVOST	WIRING DIAGRAM	NO: D060993	PAGE: 28.8sp1	REVISION 11

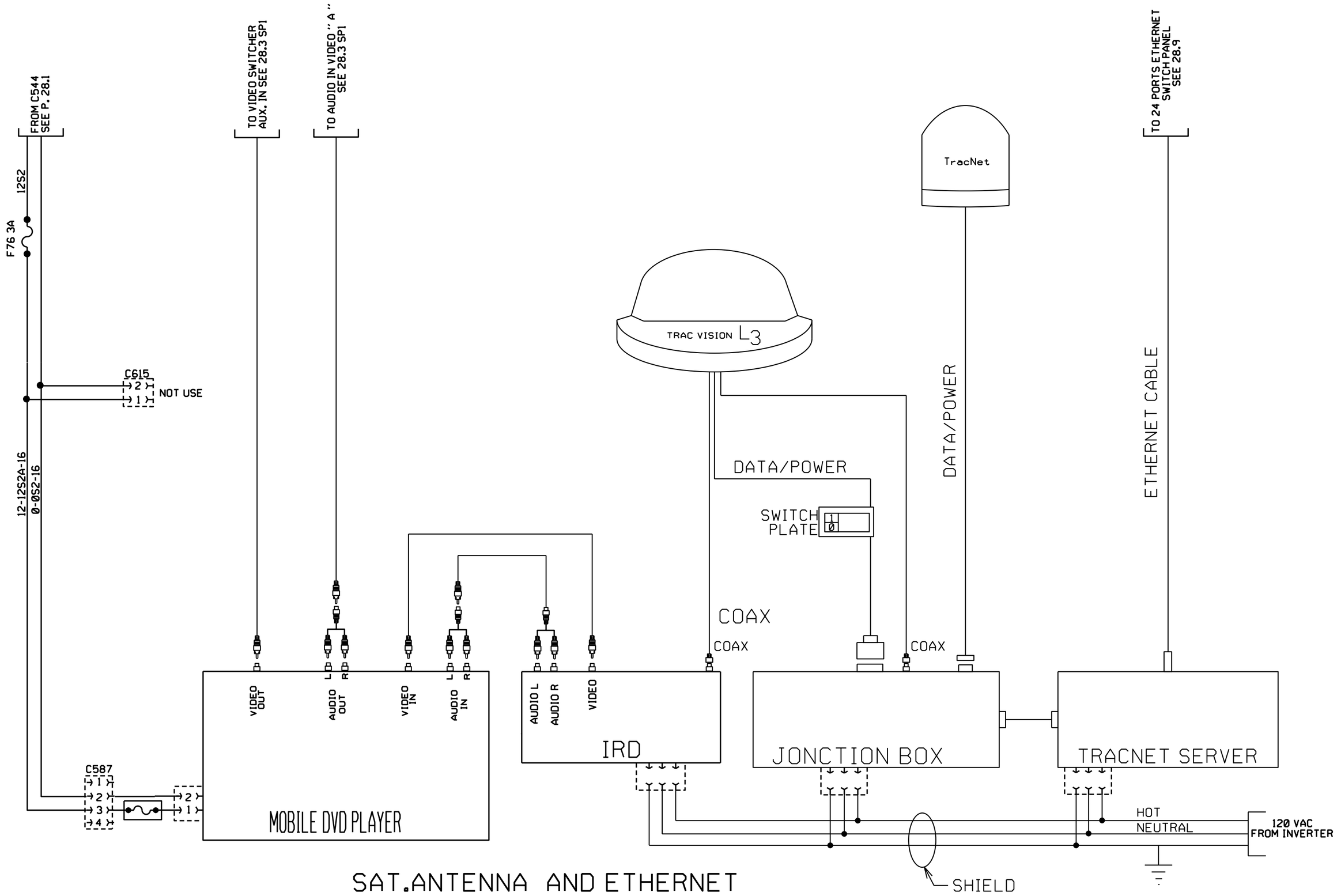

SAT.ANTENNA AND ETHERNET

(PRAIRIE BUS LINES)

PREVOST	WIRING DIAGRAM	NO: D060993	PAGE: 28.8sp1	REVISION 13

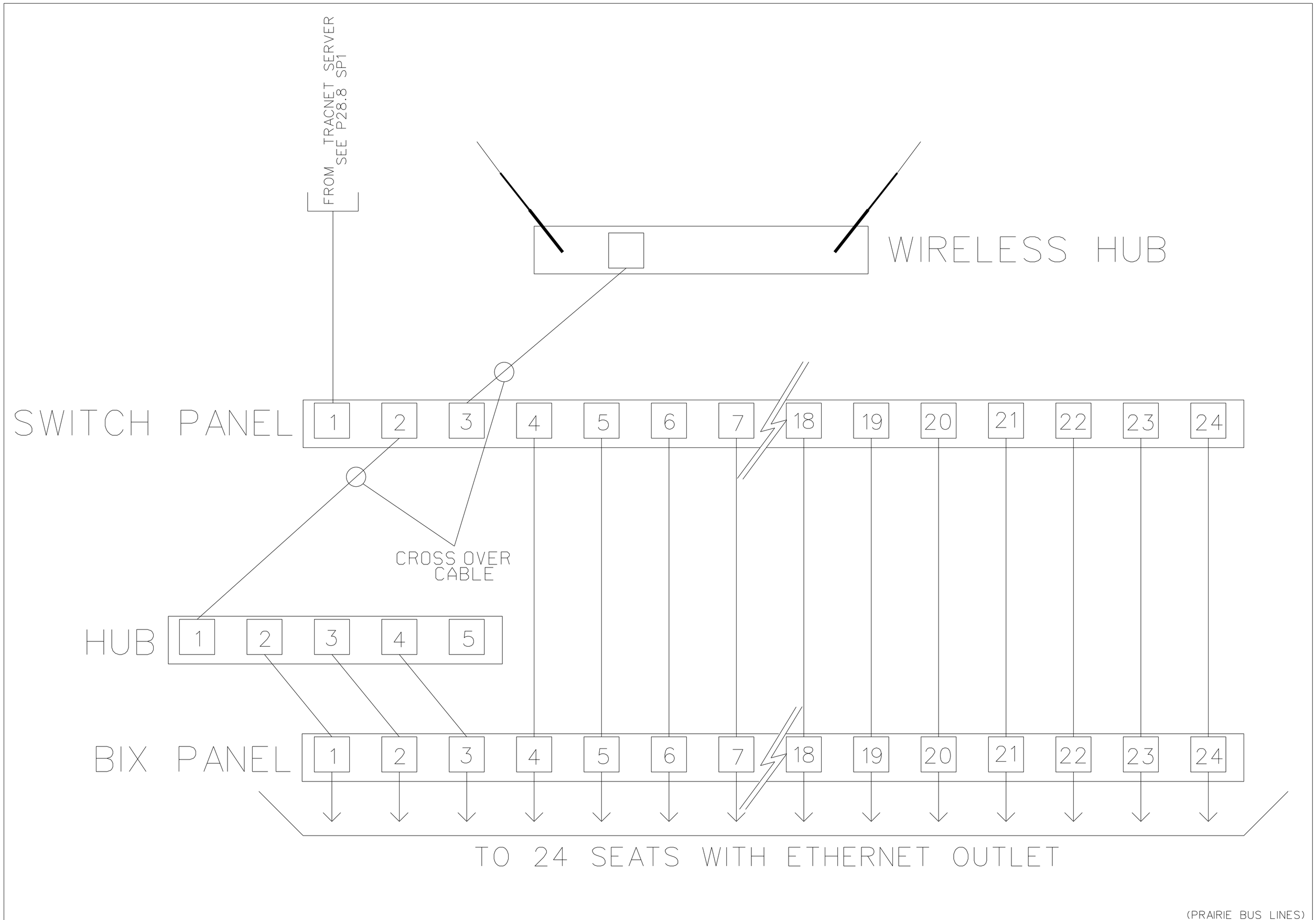

(PRAIRIE BUS LINES)

PREVOST	WIRING DIAGRAM	NO: D060993	PAGE: 28.9SP1	REVISION 13

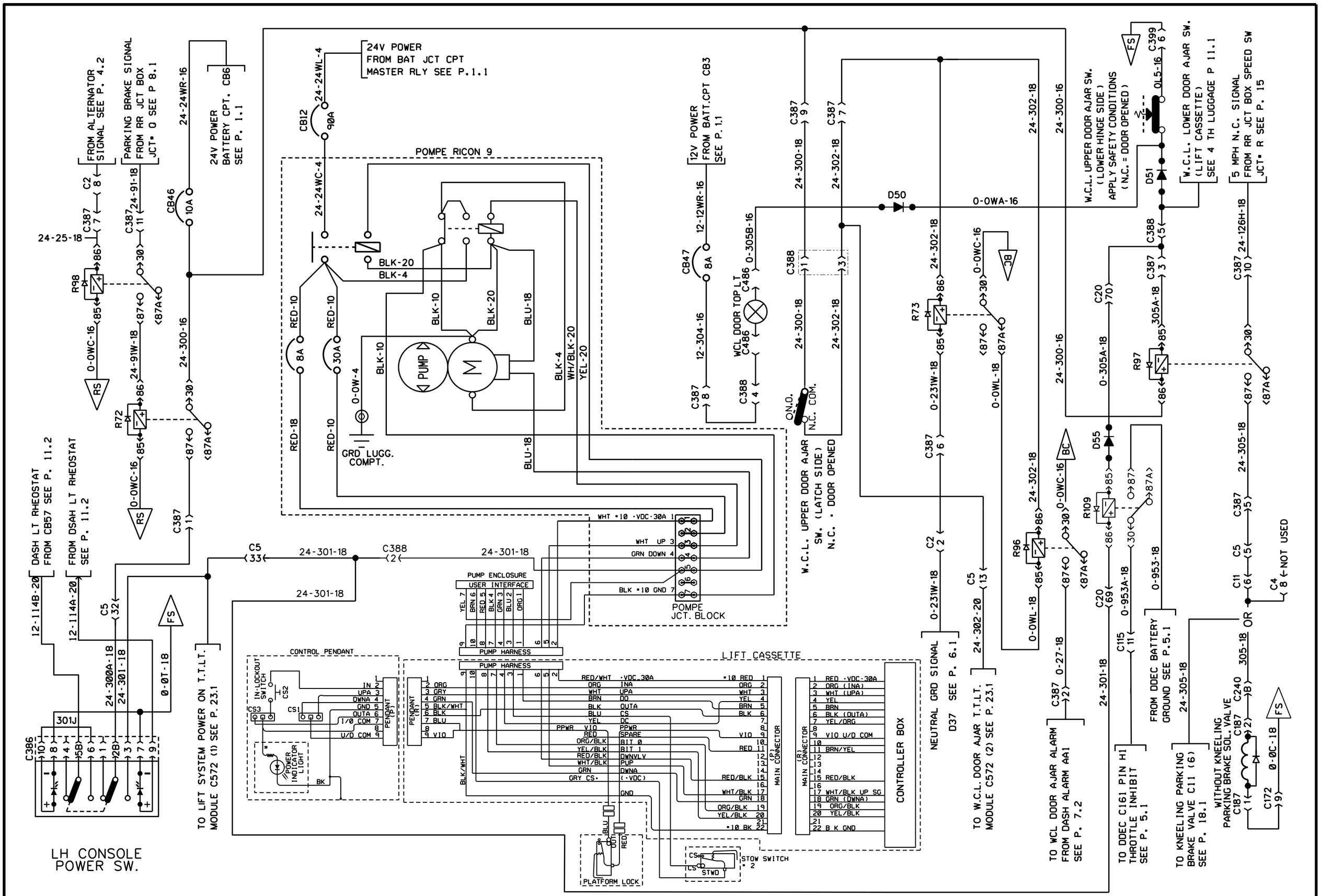

W.C.L. SYSTEM RICON 9

PREVOST	WIRING DIAGRAM	NO: D060993	PAGE: 29.1	REVISION 00

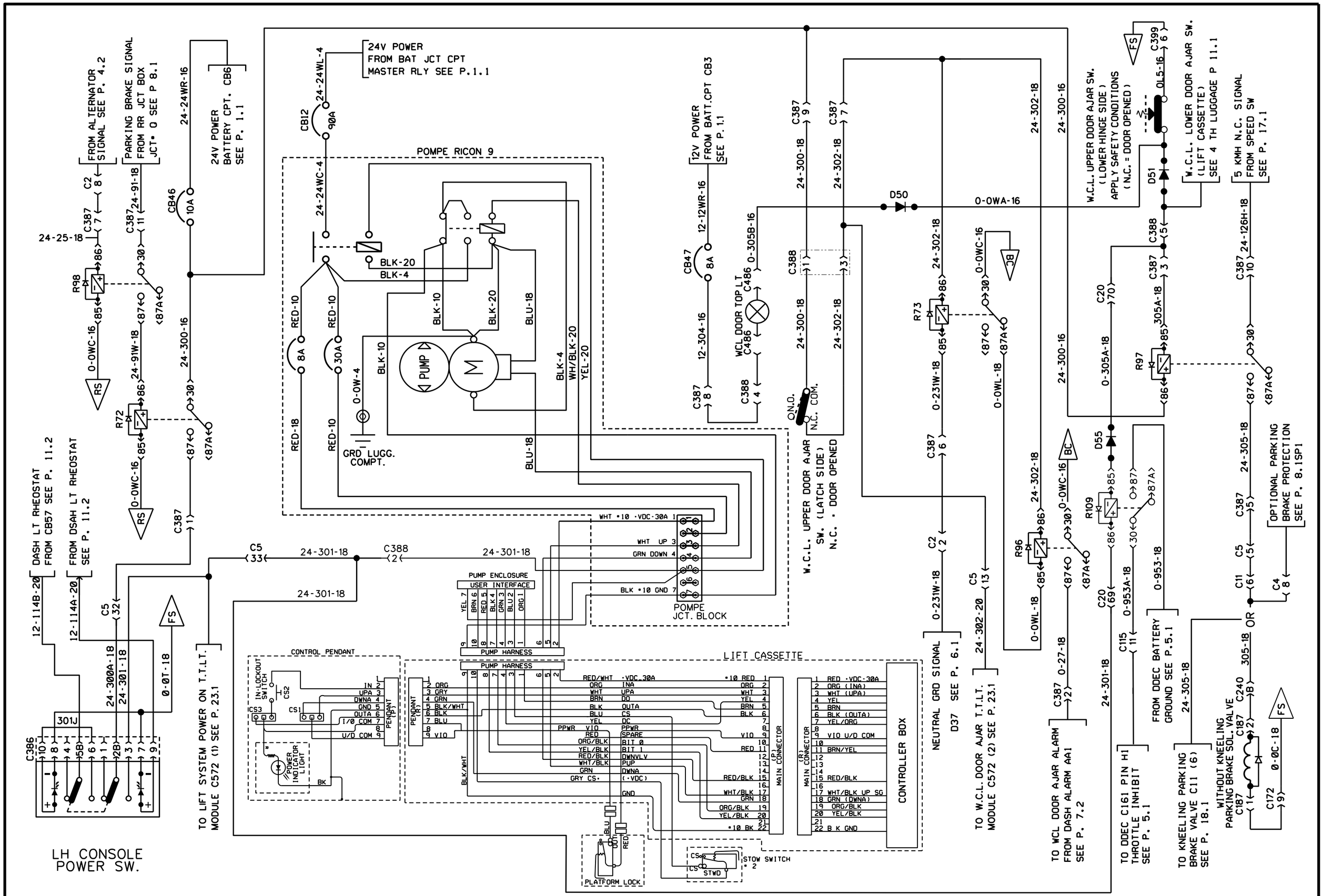

W.C.L. SYSTEM RICON 9

PREVOST	WIRING DIAGRAM	NO: D060993	PAGE: 29.1	REVISION 03

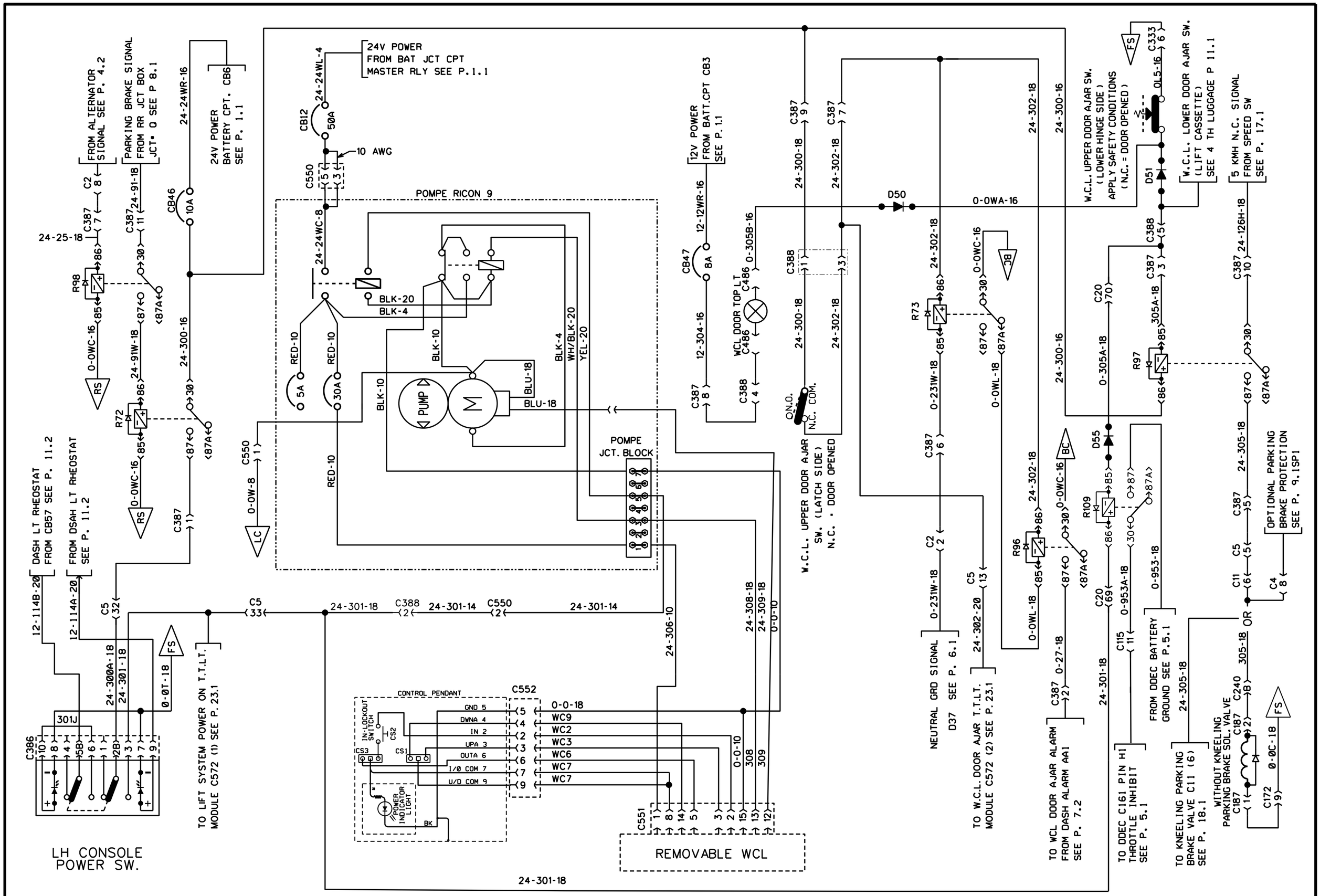

W.C.L. SYSTEM RICON F9T

PREVOST	WIRING DIAGRAM	NO: D060993	PAGE: 29.1	REVISION 05

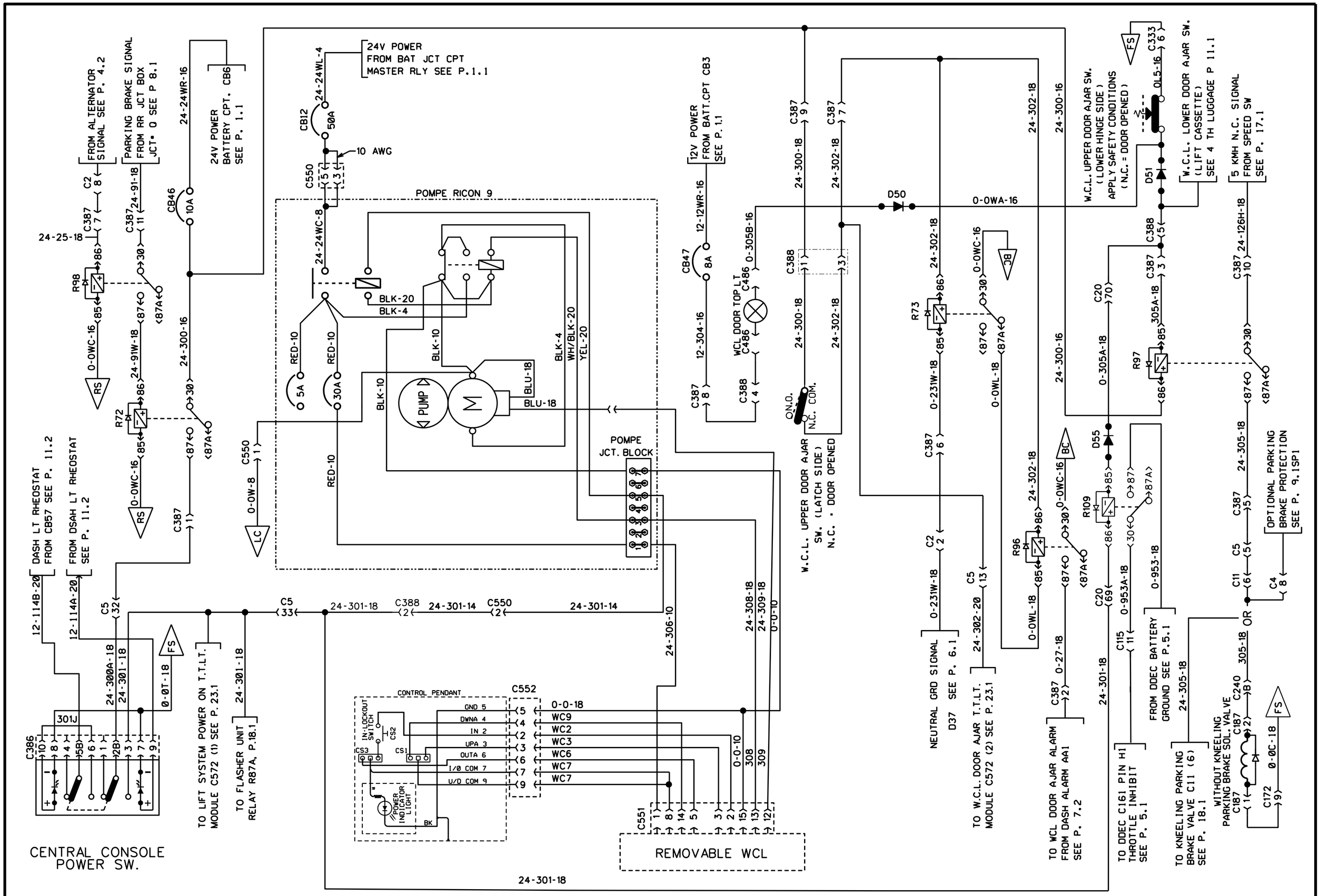

W.C.L. SYSTEM RICON F9T

PREVOST	WIRING DIAGRAM	NO: D060993	PAGE: 29.1	REVISION 08

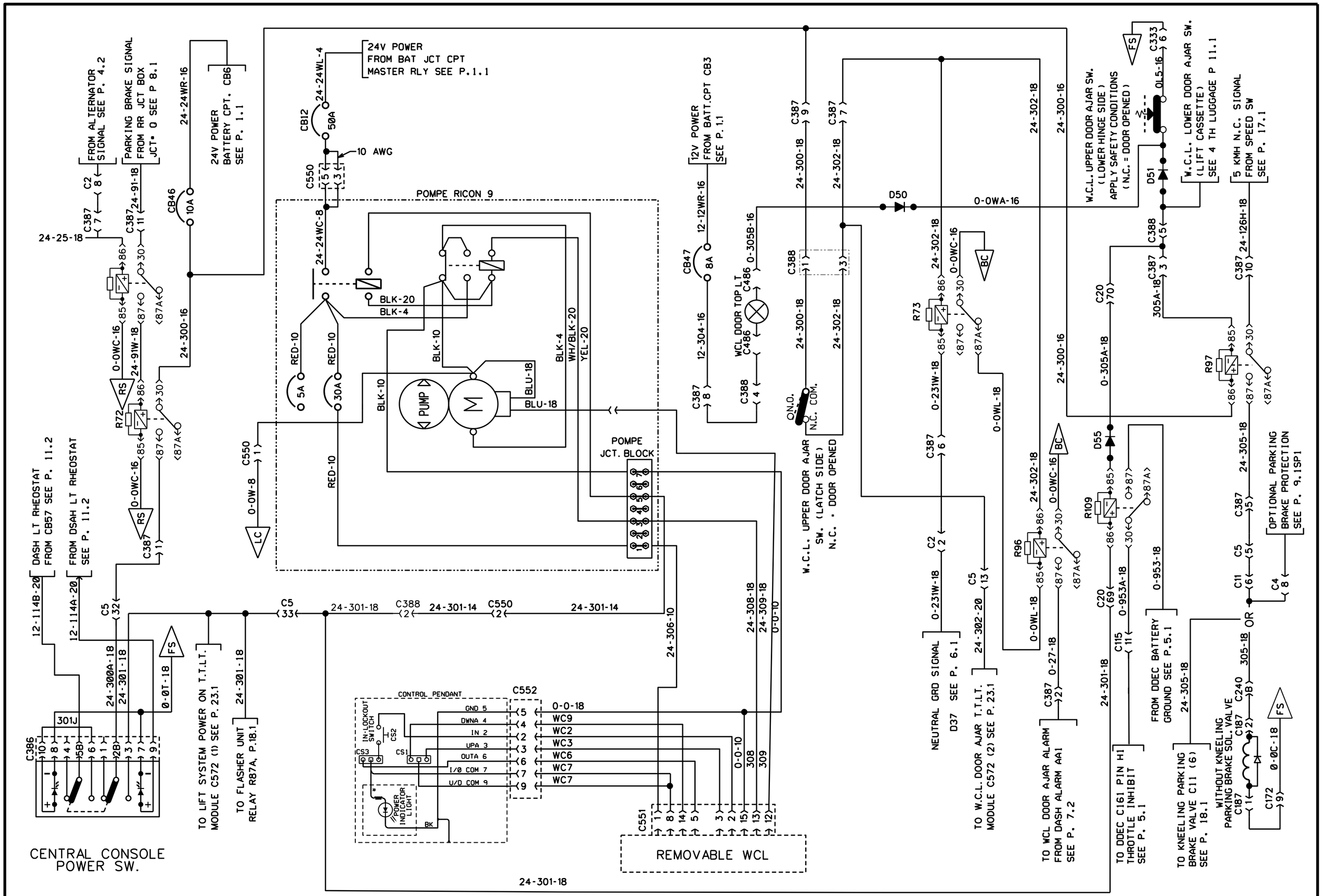

W.C.L. SYSTEM RICON F9T

PREVOST	WIRING DIAGRAM	NO: D060993	PAGE: 29.1	REVISION 15

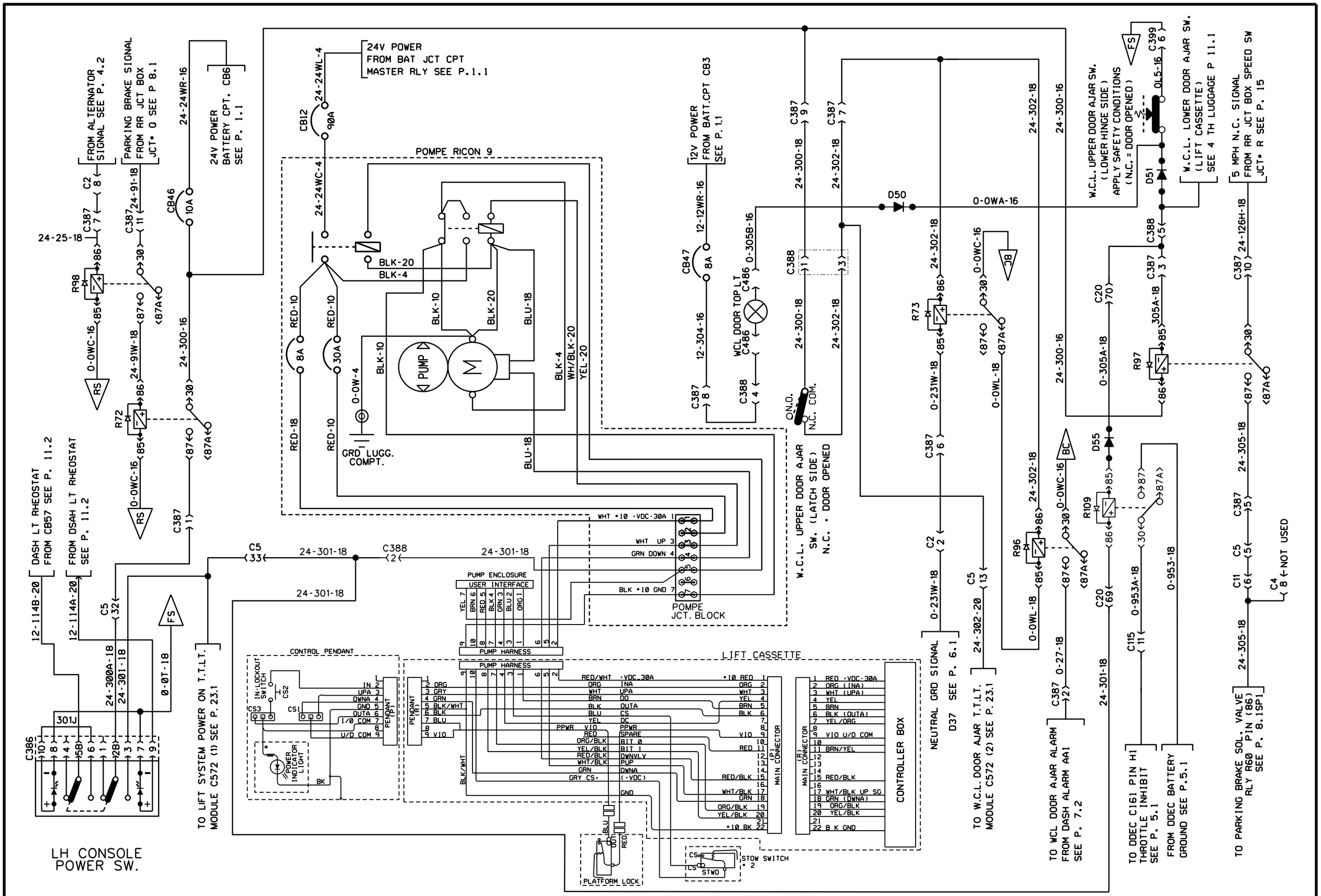

W.C.L. SYSTEM RICON 9

WITH SAFETY SW. ADDED

PREVOST	WIRING DIAGRAM	NO: D060993	PAGE: 29.1SP1	REVISION 00

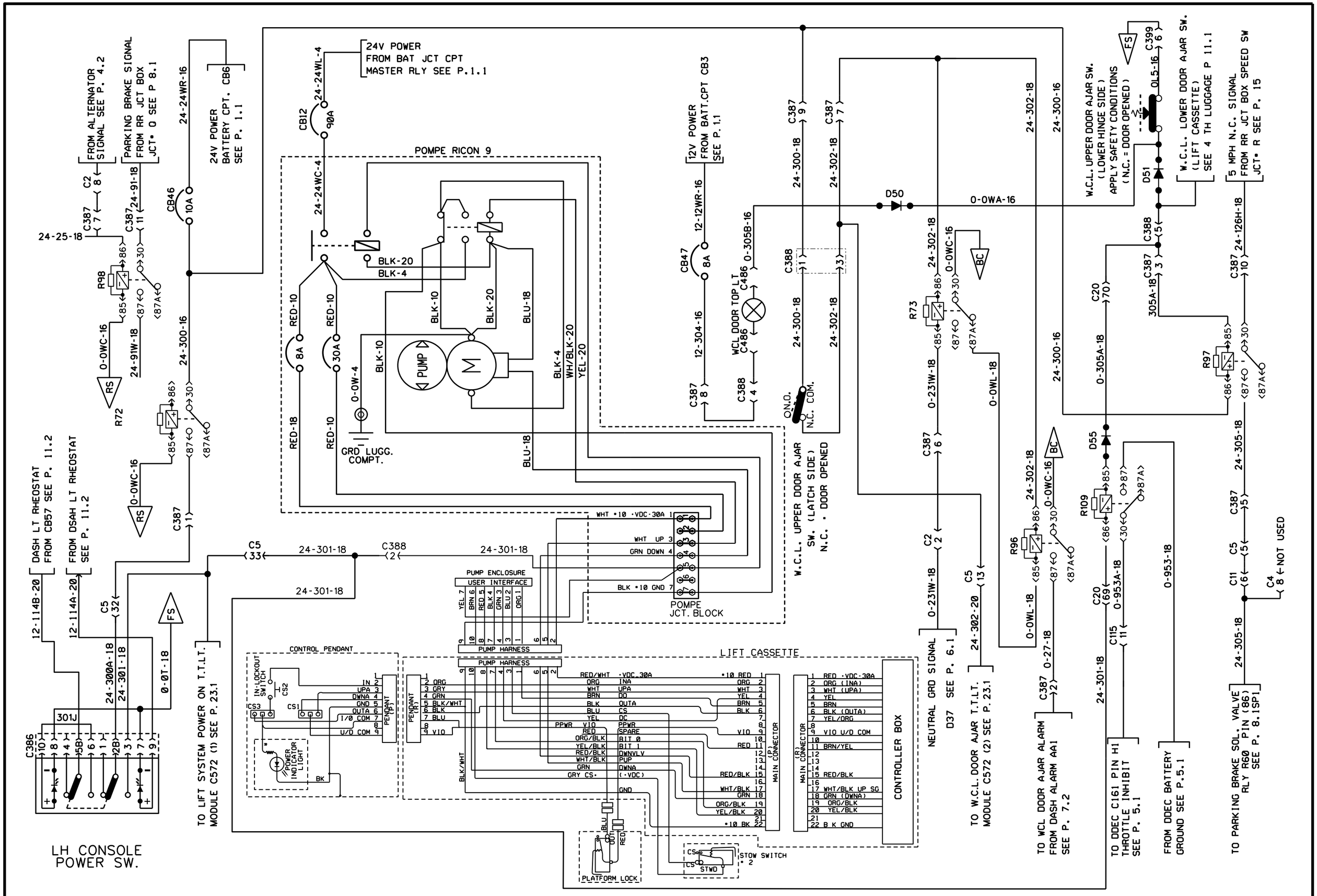

W.C.L. SYSTEM RICON 9

PREVOST	WIRING DIAGRAM	NO: D060993	PAGE: 29.1SP1	REVISION 15

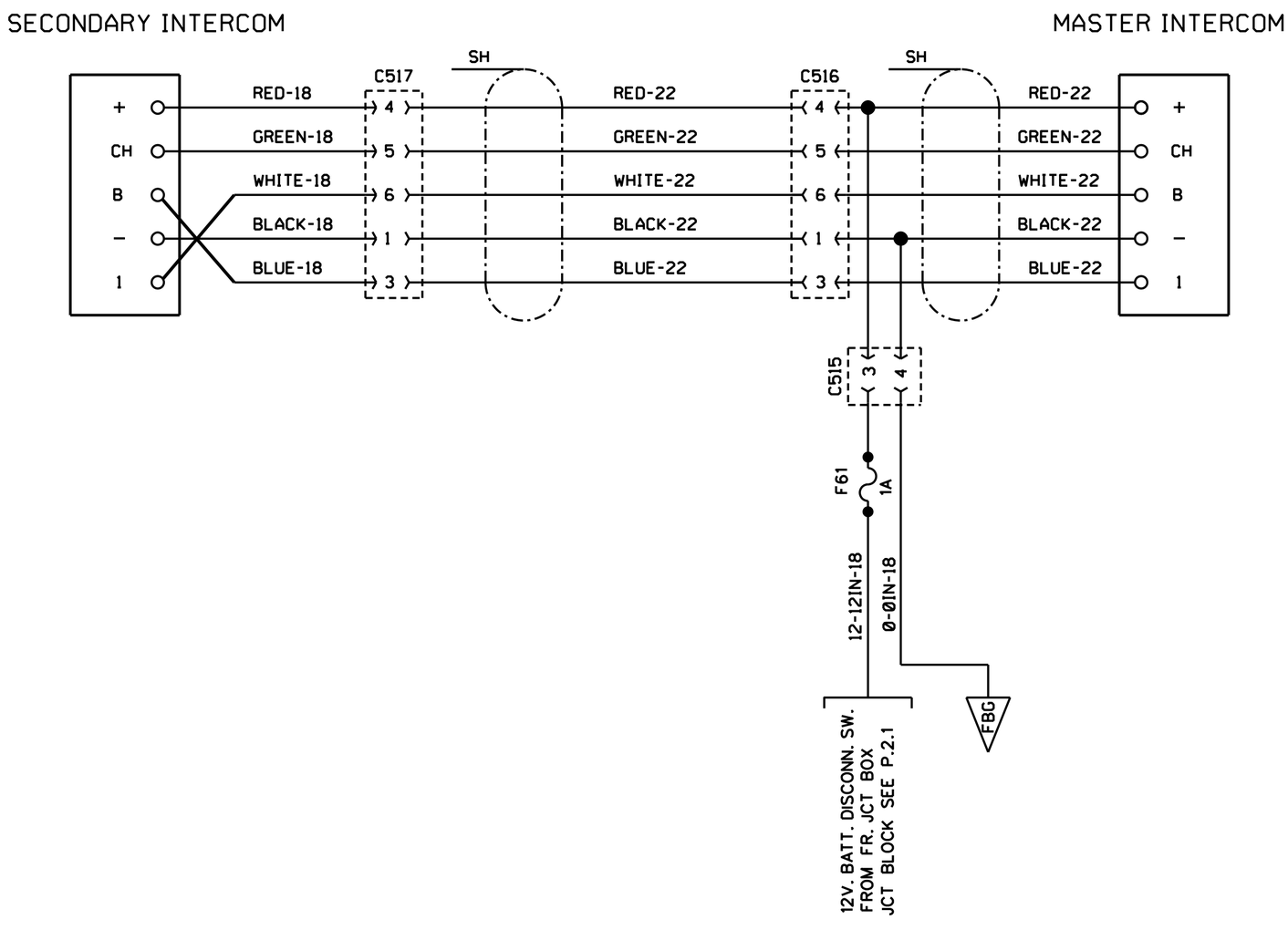

INTERCOM

PREVOST	WIRING DIAGRAM	NO: D060993	PAGE: 30.1.	REVISION 00